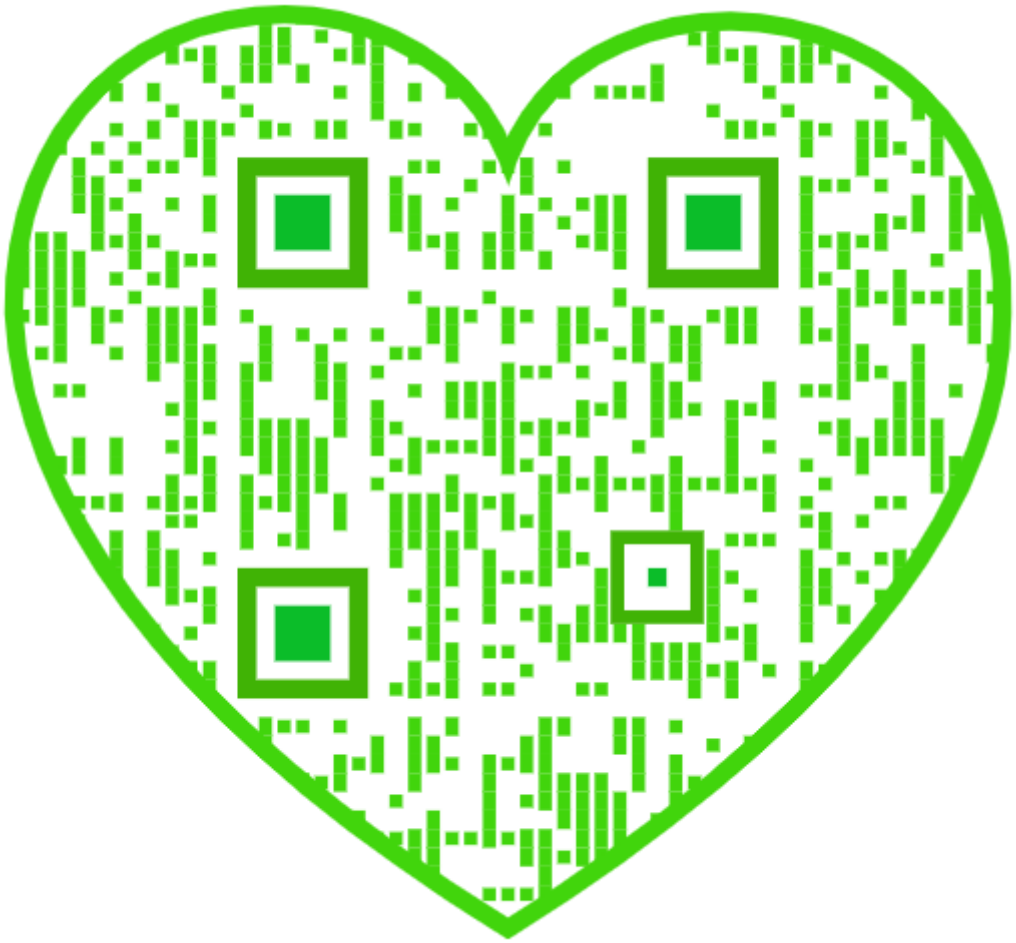

EXPERIMENTAL ENGINEERING

AND

MANUAL FOR TESTING.

FOR ENGINEERS AND FOR STUDENTS IN ENGINEERING LABORATORIES.

BY

ROLLA C. CARPENTER, M.S., C.E., M.M.E., LL.D.,

PROFESSOR OF EXPERIMENTAL ENGINEERRING, SIBLEY COLLEGE, CORNELL UNIVERSITY.

SIXTH REVISED AND ENLARGED EDITION.

FOURTH THOUSAND.

NEW YORK:

JOHN WILEY & SONS.

LONDON: CHAPMAN & HALL, LIMITED.

1910

THE NEW YORK
PUBLIC LIBRARY
539943
ASTOR, LENOX AND
TILDEN FOUNDATIONS.
R 1911 L

COPYRIGHT, 1892, 1906,
BY
ROLLA C. CARPENTER.

THE SCIENTIFIC PRESS
ROBERT DRUMMOND AND COMPANY
BROOKLYN, N. Y.

PREFACE TO THE SIXTH EDITION.

THE first edition of the present work, entitled "Notes to Mechanical Laboratory Practice," was published in 1890; a second edition was published in 1891, and soon exhausted by an unexpected demand from engineering schools and the profession. The two early editions were prepared especially for the use of students in the Laboratory of Experimental Engineering, Sibley College, Cornell University, for the purpose of facilitating investigation of engineering subjects, and of providing a systematic course of instruction in experimental work.

The book was rewritten and much enlarged in 1892, and the title changed to *Experimental Engineering*. Four revised editions, containing a total of nearly ten thousand volumes, have been published since that time, in which various errors in the previous editions have been eliminated and additions made as required by the advance in the engineering art. The present, or sixth, edition is a complete revision of the entire book, with a new index and more than 100 pages of additional matter, including chapters on the testing of the Steam-turbine, the Air-compressor, and the Refrigerating-machine. It also contains much new matter relating to the testing of the Gas-engine.

Respecting the field of the book, attention is called to the well-known and universally acknowledged fact that nearly all the recent progress in the engineering art is due to experimental investigation and research. Without such research the coefficients which are employed in making practical application of theoretical laws would not have been known, and engineering constructions

and machines which are now designed with confidence to produce definite results, in advance of actual trial, would not have been possible. Experimental research and test are also valuable in discriminating between correct and false theories, since it is true that any reliable theory will be verified by experiment, whereas no theory can be correct which does not accord with experimental results.

On the other hand, experimental results may lead to erroneous conclusions if the fundamental rational theory which applies is unknown, and it is for this reason important to understand the fundamental theory, if any exist, in advance of the experimental work. The fact should be noted and appreciated that without theory all engineering knowledge would be reduced to a mere inventory of the results of observations. It is attempted in the work on Experimental Engineering to point out the relation between the fundamental theory and the experimental results where such a theory exists, and for other cases to point out general methods of drawing conclusions from the observations and data obtained in performing the experiments.

The principal object of the present edition is to supply a text-book for laboratory use, but it is also believed that the volume will not be without value as a reference-book to the consulting and practising engineer, since it contains in a single volume the principal standard methods which have been from time to time adopted by various engineering societies for the testing of materials, engines, and machinery, and an extensive series of tables useful in computing results. It also contains a description of the apparatus required in testing, directions for taking data and deducing results in engineering experiments, as applied in nearly every branch of the art.

The book is, however, intended chiefly for use in engineering laboratories, and presents information which the experience of the author has shown to be necessary to carry out experiments intelligently and without great loss of time on the part of students. For this purpose it gives a brief statement of the theoretical prin-

ciples involved in connection with each experiment, with references to complete demonstrations, short descriptions of the various classes of engineering apparatus or machinery, a full statement of methods of testing and of preparing reports. For a few cases where references cannot readily be given, demonstrations of the fundamental principles are given in full.

An attempt has been made, by dividing the book into several chapters of moderate length, by making the paragraphs short, and by placing the paragraph-numbers at the top of the page, to make references to the book easy to those who care to consult it. References which will, it is believed, be found ample for all purposes of the student or engineer are given, where needed, to more complete treatises on the various subjects discussed.

The importance of an engineering laboratory is now so fully recognized in colleges of engineering that it is hardly necessary to refer to the advantages which it confers. If devoted to educational purposes, it should afford students the opportunity of obtaining practical knowledge of the application and limitation of theoretical principles by personal investigation, under such direction as will insure systematic methods of observation, accurate use of apparatus, and the proper methods of drawing conclusions and of making reports. If of an advanced character, it should also provide facilities for systematic research by skilled observers, for the purpose, among other things, of discovering laws or coefficients of value to the engineering profession.

This work deals principally with the educational methods, the use of apparatus, and the preparation required for making a skilled observer.

In an engineering laboratory for the education of students, a systematic schedule of experiments parallel to the course of instruction in theoretical principles is recommended. While such a laboratory course cannot be laid down here as applicable to all courses of instruction in engineering, the following schedule of studies is presented for consideration as one which has been successfully adopted in the instruction of large classes in Sibley

College. The order of the experiments was largely determined by the previous training of the men, and by the attempt to make a limited amount of apparatus do maximum duty. The schedule is presented more as an illustration of one that has been practically tested, and for which the work on Experimental Engineering is adapted, than as a model for other institutions to follow.

COURSE OF EXPERIMENTS,
SIBLEY COLLEGE ENGINEERING LABORATORY.

JUNIOR YEAR.

First Term.

Strength of Materials—Tensile and Transverse; *Calibration*—Indicator-springs and Steam-gauges; Weirs and Water-meters; Mercurial Thermometers; Pyrometers; Transmission-dynamometers; Slide-rule; Calculating-machines; Planimeters; Calorimeter and Indicator-practice.

Second Term.

Strength of Materials—Compression and Torsion; *Lubricants*—Viscosity; Flash-test; Coefficient of Friction; *Steam-engine*—Valve-setting; Flue-gas Analysis; *Temperature*—Pyrometers, Air-thermometers; *Calibration*—Indicator-springs; *Efficiency-tests*—Steam-boiler; Steam-pump; Steam-engine; Hydraulic Ram.

SENIOR YEAR.

First Term.

Strength of Materials—Brick; Stone; Cement; *Efficiency-tests*—Hot-air Engine (2 tests); Gas-engine (3 tests); Injector; Centrifugal Pump; Hydraulic Motor; Belting; Steam Boiler; Compound Engine; Oil-engine (2 tests); DeLaval Steam Turbine; Parsons Steam Turbine.

Second Term.

Strength of Materials—Springs; Tension test on Emery-machine; *Efficiency-tests*—Air-compressor; Triple-expansion Engine; University Electric-lighting Plant; Doble Water-wheel; Pelton Wheel; Refrigeration; Compound and Triple-expansion Engine by Hirn's Method; Special Research; Thesis Work.

The work required of each student per week is substantially as follows: one laboratory exercise three hours in length, one

recitation one hour in length, and the computation of the data and the preparation of a report, including data, results, and all necessary curves. The report is required to be full and complete, and is expected to train the young man in methods of writing English and of reporting in his own language what he has learned respecting the subject under investigation in the laboratory and in the references, as well as to teach him methods of observing and recording the data and of computing the results of the test. For the purpose of performing the experiments the students are divided into groups of three, and the experiments are usually arranged as to require three observers or multiples thereof. The computation of results is made by all the members of the group, but each man is required to write an individual report of the test. The credit given is the same as for a recitation course requiring three hours per week. The student's work is performed under the personal direction of a competent instructor, who has charge usually of twelve to fourteen men, who gives such detailed instruction as is required, and reads, corrects, and grades all reports. The student is required, whenever practicable or possible, to operate his own machine or apparatus during the test, in order to obtain practical skill in the handling and operation of apparatus, machines, and prime movers, which is believed to meet an important requirement of an engineering laboratory. He is not expected to do the shop work required for construction of the apparatus, or that required for the preparation of the experiment, as the time at his command is not sufficient for such work; and besides, instruction in shop work is given in a different department in Sibley College.

The full list of subjects treated in the book is given in the table of contents which immediately follows the preface. Some of the more important divisions of the work are as follows·

Experimental Methods of Investigation.
Reduction of Experimental Data Analytically and Graphically.
Apparatus for Reduction of Experimental Data, including use of Slide-rule, Planimeter, etc.

Strength of Materials, including General Formulæ, Description of Testing machines, and Methods of Testing.
Cement-testing Machines and Methods of Testing.
Machines and Methods for Testing Lubricants and Friction.
Dynamometers and Machines for the Measurement of Power.
Hydraulics, Hydraulic Machinery, and Methods of Testing.
Measurement of Pressure and Temperature.
Measurement of Moisture in Steam by Calorimeters.
Fuel-calorimeters and Flue-gas Analysis.
The Steam-engine and Methods of Testing.
The Steam-boiler and Methods of Testing.
The Steam-turbine and Methods of Testing.
Gas and Hot-air Engines and Methods of Testing.
The Injector and Methods of Testing.
Methods of Testing Locomotives.
Methods of Testing Pumping-engines.
Air-compressors and Methods of Testing.
Refrigerating-machines and Methods of Testing.

The author has been assisted in the preparation of the various editions of the book by his colleagues and assistants in Sibley College, and is indebted to them for many suggestions and a great deal of valuable information. Ample credit is given authorities from whom information has been obtained in the body of the book in connection with the matter under discussion. In the early editions of the work the writer was under special obligation to the late Dr. R. H. Thurston and to Professor C. W. Scribner; for the later editions to Assistant Professor H. Diederichs, and C. Hirshfeldt, and to Mr. R. L. Shipman, Mr. W. M. Sawdon, and Mr. G. B. Upton.

TABLE OF CONTENTS.

INTRODUCTION.

ARTICLE		PAGE
1.	Objects of Engineering Experiment	1
2.	Relation of Theory to Experiment	2
3.	The Method of Investigation	2
4.	Classification of Experiments	3
5.	Efficiency-tests	3

CHAPTER I.

REDUCTION OF EXPERIMENTAL DATA.

6.	Classification of Errors	5
7.	Probability of Errors	6
8.	Errors of Simple Observations	7
10.	Combination of Errors	9
12.	Deduction of Empirical Formulæ	10
15.	Rules and Formulæ for Approximate Calculation	15
16.	Rejection of Doubtful Observations	17
17.	Errors to be Neglected	18
18.	Accuracy of Numerical Calculations	19
19.	Graphical Representation of Experiments	20
21.	Autographic Diagrams	21
22.	Construction of Diagrams	22

CHAPTER II.

APPARATUS FOR REDUCTION OF EXPERIMENTAL DATA.

23.	The Slide-rule	24
25.	The Vernier	29
26.	The Polar Planimeter	30
30.	The Suspended Planimeter	41
31.	The Coffin Planimeter	41

ARTICLE PAGE
34. The Roller Planimeter. 45
36. Care and Adjustment of Planimeters. 50
37. Directions for Use of Planimeters. 51
38. Calibration of Planimeters. 52
39. Errors of Planimeters. 55
40. The Vernier Caliper. 57
41. The Micrometer. 58
42. The Micrometer Caliper. 59
43. The Cathetometer. 62
44. Computation Machines. 64

CHAPTER III.

STRENGTH OF MATERIALS—GENERAL FORMULAE.

45. Definitions. 67
46. Strain-diagrams. 69
47. Viscosity. 70
48. Notation. 72
49. Tension. 72
51. Compression. 73
52. Transverse. 76
54. Shearing and Torsion. 81
55. Modulus of Rigidity. 83
58. Combination of Two Stresses. 84
60. Thermodynamic Relations. 86

CHAPTER IV.

STRENGTH OF MATERIALS—TESTING-MACHINES.

61. General Description of Machines. 88
65. Shackles or Holders. 98
66. Emery Testing-machine. 100
68. Riehlé Bros.' Testing-machine. 107
70. Olsen Testing-machine. 110
73. Thurston's Torsion Machines. 114
75. Riehlé's and Olsen's Torsion Machines. 118
76. Impact Testing-machine. 119
77. Cement-testing Machines. 119
Testing-machine Accessories. 124

ARTICLE PAGE
78 to 86. Extensometers. 124
87. Deflectometer. 135

CHAPTER V.

METHODS OF TESTING MATERIALS OF CONSTRUCTION.

88. Form of Test-pieces. 136
93. Elongation—Fracture. 143
94. Strain-diagrams. 144
95. Tension Tests. 145
99. Compression Tests. 154
100. Transverse Tests. 155
102. Elastic Curve. 159
103. Torsion Test. 160
105. Impact Test. 163
107. Special Tests of Materials. 165
109. Method of Testing Bridge Materials. 168
110. Admiralty Tests. 172
111. Lloyd's Tests for Steel used in Ship-building. 173
112. Tests for Cast-iron Water-pipe. 174
114. Testing Stones. 175
115. " Bricks. 178
116. " Paving Material. 179
117. " Hydraulic Cements. 181

CHAPTER VI.

FRICTION—TESTING OF LUBRICANTS.

122. Friction—Definitions—Useful Formulæ. 196
127. Friction of Teeth. 199
128. " " Cords or Belts. 199
129. " " Fluids. 200
130. " " Lubricated Surfaces. 201
131. Testing of Lubricants—Density. 201
136. " " " Viscosity. 209
143. " " " Gumming. 210
144. " " " Flash-test. 210
147. Testing of Lubricants—Cold Test. 213
151. Oil-testing Machines—Rankine's. 215
152. " " Thurston's. 217

ARTICLE PAGE
155. Coefficient of Friction. 222
157. Riehlé's Oil-testing Machine. 224
158. Durability Test of Lubricants. 226
159. Ashcroft's Oil-testing Machine. 227
160. Boult's " " 227
162. Experiment with Limited Feed. 231
163. Forms for Report of Lubricant Test. 233

CHAPTER VII.

MEASUREMENT OF POWER—BELT-TESTING.

165. Absorption Dynamometer. The Prony Brake. 235
173. " " " Alden Brake. 241
178. Practical Directions for Use of Brake. 244
179. Pump-brakes. 245
180. Fan-brakes. 245
181. Traction Dynamometers. 246
182. Transmission Dynamometers—Morin. 247
186. " " Steelyard. 250
187. " " Pillow-block. 252
188. " " Lewis. 252
189. " " Differential. 255
192. " " Emerson. 259
194. " " Van Winkle. 261
195. " " Belt. 263
197. Belt-testing Machine, with Directions. 264

CHAPTER VIII.

MEASUREMENTS OF LIQUIDS AND GASES.

200. Theory of the Flow of Water. 270
201. Flow of Water over Weirs—Formulæ. 272
203. " " " through Nozzles—Formulæ. 275
205. " " " under Pressure—Formulæ. 276
206. " " " in Circular Pipes. 277
207. " " " through a Diaphragm—Formulæ. 279
209. Method of Measuring the Flow of Water by Weirs. 281
213. " " " " " " " " Meters. 283
217. " " " " " " " " Nozzles. 287
219. " " " " " " " " Diaphragms. 288
220. " " " " " " " " in Streams. 289
222. " " " " " " " " Pitot's Tube. 292

ARTICLE PAGE
225. Flow of Compressible Fluids through an Orifice. 295
229. " " " " in a Pipe. 299
230. " " Steam. 300
232. Gas-meters. 304
233. Anemometer. 306

CHAPTER IX.

HYDRAULIC MACHINERY.

235. Classification. 308
239. Water-pressure Engines. 309
241. Overshot Water-wheels. 311
242. Breast-wheels. 313
243. Undershot Wheels. 313
244. Impulse-wheels. 314
245. Turbine. 315
248. Reaction-wheels. 317
249. The Hydraulic Ram. 321
250. Methods of Testing Water-motors. 322
253. Pumps. 327
256. Test of Pumps. 330
258. Form for Data and Report of Pump-test. 332

CHAPTER X.

DEFINITIONS OF THERMODYNAMIC TERMS.

259. Books of Reference. 325
260. Units of Pressure. 336
261. Heat and Temperature. 337
264. Properties of Steam. 340
267. Steam-tables. 344

CHAPTER XI.

MEASUREMENT OF PRESSURE.

268. Manometers. 345
271. Mercury Columns. 349
273. Draught-gauges. 351

ARTICLE PAGE
277. Steam-gauges. 357
281. Apparatus for Testing Gauges. 363

CHAPTER XII.

MEASUREMENT OF TEMPERATURE.

285. Mercurial Thermometers. 369
288. Air-thermometers. 371
295. Calibration of Thermometers. 380
296. Metallic Pyrometers. 380
298. Air and Calorimetric Pyrometers. 381
299. Determination of Specific Heat. 382
302. Electric Pyrometers. 385
303. Optical Pyrometers. 386

CHAPTER XIII.

METHODS OF MEASURING MOISTURE IN STEAM.

305. Definitions. 390
307. General Methods. 391
314. Errors in Calorimeters. 396
315. Sampling the Steam. 399
317. Water Equivalent of Calorimeter. 401
318. Barrel Calorimeter. 402
321. Hoadley Calorimeter. 407
323. Barrus Continuous Calorimeter. 411
326. " Superheating " 416
328. Throttling Calorimeter. 418
336. Separator " 430
341. Chemical " 440

CHAPTER XIV.

HEATING VALUE OF COALS—FLUE-GAS ANALYSIS.

343. Combustion—Definition and Table. 443
344. Heat of Combustion. 444
345. Determination of Heat by Welter's Law. 446
346. Temperature produced by Combustion. 448

ARTICLE PAGE
347. Composition of Fuels. 450
348. Fuel-calorimeters—Principle. 451
352. " Favre and Silbermann's. 453
353. " Thompson's. 455
354. " Berthier. 456
355. " Berthelot Bomb. 459
356. " Carpenter. 463
357. Value of Fuel by Boiler-trial. 472
358. Analysis of the Products of Combustion. 473
360. Reagents for Flue-gas Analysis. 475
363. Elliot's Flue-gas Apparatus. 479
364. Wilson's " " 481
365. Orsat's " " 481
366. Hemple's " " 483
367. Deductions from Flue-gas Analysis. 486

CHAPTER XV.

METHOD OF TESTING STEAM-BOILERS.

369. Objects of Boiler-testing. 492
371. Efficiency of a Boiler. 493
375. Standard Method of Testing Steam-boilers. 495
377. Concise Directions for Testing Boilers. 513

CHAPTER XVI.

THE STEAM-ENGINE INDICATOR.

378. Uses of the Indicator. 515
380. Early Forms. 517
381. Richards. 518
382. Thompson. 519
383. Tabor. 520
384. Crosby. 521
385. Indicators with External Springs. 523
387. Optical Indicators. 525
390. Reducing-motions. 529
393. Calibration. 535
397. Method of Attaching to the Cylinder. 543
398. Directions for Use. 545

CHAPTER XVII.

THE INDICATOR-DIAGRAM.

ARTICLE PAGE
400. Definitions. 547
401. Measurement of Diagrams. 551
403. Form of Diagram. 553
406. Weight of Steam from the Diagram. 557
407. Clearance from the Diagram. 560
408. Cylinder-condensation and Re-evaporation 561
409. Discussion of Diagrams. 562
410. Diagrams from Compound Engines. 565
411. Crank-shaft and Steam-chest Diagrams. 567

CHAPTER XVIII.

METHODS OF TESTING THE STEAM-ENGINE.

412. Engine Standards. 569
414. Measurement of Speed. 571
417. Surface Condenser. 576
418. Calibration of Apparatus. 578
419. Preparations for Testing. 581
421. Quantities to be Observed. 583
422. Preliminary Indicator-practice. 584
423. Valve-setting. 586
424. Friction-test. 589
425. Efficiency-test. 589
426. Hirn's Analysis. 590
430. " " of Compound Engines. 603

CHAPTER XIX.

PUMPING-ENGINES AND LOCOMOTIVES.

433. Standard Method of Testing Pumping-engines. 614
434. " " " " Locomotives. 634
435. Experimental Engines. 656

CHAPTER XX.

EXPERIMENTAL DETERMINATION OF INERTIA.

ARTICLE PAGE
436. General Effects of Inertia. 660
437. The Williams Inertia-indicator. 661
438. " Inertia-diagram. 664

CHAPTER XXI.

THE INJECTOR AND PULSOMETER.

439. Description of the Injector. 670
440. Theory. 672
442. Limits of. 676
443–5. Directions for Testing. 679
446–7. The Pulsometer. 683

CHAPTER XXII.

THE STEAM-TURBINE.

448. General Principles. 686
449. Impulse Type (De Laval). 687
450. Reaction Type (Parsons). 689
451. Combined Type (Curtis). 690
452. Testing. 691

CHAPTER XXIII.

HOT-AIR AND GAS ENGINES.

454. General Principles. 692
455. Ericsson Hot-air Engine. 692
456. Rider Hot-air Engine. 693
457. Theory. 695
458. Method of Testing. 695
460. The Gas-engine. 701
461. Oil-engines. 709
462. Theoretical Formulæ. 711
463. Cycle of Operation. 713

ARTICLE PAGE
464. Method of Testing. 714
465. Data and Results of Test. 717

CHAPTER XXIV.

AIR-COMPRESSORS.

466. Types of Compressors. 720
467. Piston Air-compressor. 720
468. Rotary Blowers. 723
469. Centrifugal Fans. 724
470. Measurement of Pressure and Velocity. 725
471. Clearance, Effect of. 728
472. Loss of Work Due to Rise of Temperature. 728
473. Centrifugal Fan, Theory of. 729
474. Test of Air-compressor Data Sheets. 730
475. " " Centrifugal Blower. 733

CHAPTER XXV.

MECHANICAL REFRIGERATION.

476. Systems of Mechanical Refrigeration. 734
477. Relation of Work to Heat Transfer. 735
478. Working Fluids, Properties of. 736
479. Efficiency of the Refrigerating-machine. 738
480. Heat Losses. 740
481. The Air-refrigerating Machine. 741
482. The Ammonia Refrigerating-machine. 742
483. Relations of Pressure and Volume. 744
484. Absorption System of Refrigeration. 747
Logs and Data Sheets. 749

CHAPTER XXVI.

PRACTICAL TABLES.

TABLE
I. U. S. Standard and Metric Measures. 754
II. Numerical Constants. 756
III. Logarithms of Numbers. 769
IV. Logarithmic Functions of Angles. 771

TABLE		PAGE
V.	Natural Functions of Ang.es	777
VI.	Coefficients of Strength of Materials	781
VII.	Strength of Metals at Different Temperatures	782
VIII.	Important Properties of Familiar Substances	783
IX.	Coefficient of Friction	784
X.	Hyperbolic Naperian Logarithms	784
XI.	Moisture Absorbed by Air	785
XII.	Relative Humidity of the Air	785
XIII.	Table for Reducing Beaumé's Scale-reading to Specific Gravity	786
XIV.	Composition of Fuels of U. S.	787
XV.	Buel's Steam-tables	788
XVI.	Entropy of Water and Steam	794
XVII.	Discharge of Steam: Napier Formula	795
XVIII.	Water in Steam by Throttling Calorimeter	795
	Diagram for Determining Per Cent of Moisture in Steam	796
XIX.	Factors of Evaporation	797
XX.	Dimensions of Wrought-iron Pipe	798
XXI.	Density and Weight of Water per Cubic Foot	799
XXII.	Horse-power per Pound Mean Pressure	800
XXIII.	Water Rate Computation Table for Engines	801
XXIV.	Weirs with End Contraction	803
XXV.	Weirs without End Contraction	803
XXVI.	Horse-power of Shafting	804
XXVII.	" " Belting	804
	Sample-sheet of Cross-section Paper	805

IMPORTANT TABLES IN BODY OF BOOK.

Moments of Inertia	78
Units of Pressure Compared	336
Thermometric Scales	337
Melting-points and Specific Heats of Metals	383
Maximum Temperature of Combustion	450
Average Composition of Fuels	451
Properties of Saturated Ammonia	738

INTRODUCTION.

1. Objects of Engineering Experiments.—The object of experimental work in an engineering course of study may be stated under the following heads: firstly, to afford a practical illustration of the principles advanced in the class-room; secondly, to become familiar with the methods of testing; thirdly, to ascertain the constants and coefficients needed in engineering practice; fourthly, to obtain experience in the use of various types of engines and machines, fifthly, to ascertain the efficiency of these various engines or machines; sixthly, to deduce general laws of action of mechanical forces or resistances, from the effects or results as shown in the various tests made. The especial object for which the experiment is performed should be clearly perceived in the outset, and such a method of testing should be adopted as will give the required information.

This experimental work differs from that in the physical laboratory in its subject-matter and in its application, but the methods of investigation are to a great extent similar. In performing engineering experiments one will be occupied principally in finding coefficients relating to strength of materials or efficiency of machines; these, from the very nature of the material investigated, cannot have a constant value which will be exactly repeated in each experiment, even provided no error be made. The object will then be to find average values of these coefficients, to obtain the variation in each specific test

from these average values, and, if possible, to find the law and cause of such variation.

The results are usually a series of single observations on a variable quantity, and not a series of observations on a constant quantity; so that the method of finding the probable error, by the method of least squares, is not often applicable. This method of reducing and correcting observations is, however, of such value when it is applicable, that it should be familiar to engineers, and should be applied whenever practicable. The fact that single observations are all that often can be secured renders it necessary in this work to take more than ordinary precautions that such observations be made correctly and with accurate instruments.

2. Relation of Theory to Experiment.—It will be found in general better to understand the theoretical laws, as given in text-books, relating to the material or machine under investigation, before the test is commenced; but in many cases this is not possible, and the experiment must precede a study of the theory.

It requires much skill and experience in order to deduce general laws from special investigations, and there is always reason to doubt the validity of conclusions obtained from such investigations if any circumstances are contradictory, or if any cases remain unexamined.

On the other hand, theoretical deductions or laws must be rejected as erroneous if they indicate results which are contradictory to those obtained by experiments subject to conditions applicable in both cases.

3. The Method of Investigation is to be considered as consisting of three steps: firstly, to standardize or calibrate the apparatus or instruments used in the test; secondly, to make the test in such a way as to obtain the desired information; thirdly, to write a report of the test, which is to include a full description of the methods of calibration and of the results, which in many cases should be expressed graphically.

The methods of standardizing or calibrating will in general consist of a comparison with standard apparatus, under

conditions as nearly as possible the same as those in actual practice. These methods later will be given in detail. The manner of performing the test will depend entirely on the experiment.

The report should be written in books or on paper of a prescribed form, and should describe clearly: (1) Object of the experiment; (2) Deduction of formulæ and method of performing the experiment; (3) Description of apparatus used, with methods of calibrating; (4) Log of results, which must include all the figures taken in the various observations of the calibration as well as in the experiment. These results should be arranged, whenever possible, in tabular form; (5) Results of the experiment; these should be expressed numerically and graphically, as explained later; (6) Conclusions deduced from the experiment, and comparison of the results with those given by theory or other experiments.

4. **Classification of Experiments.**—The method of performing an experiment must depend largely on the special object of the test, which should in every case be clearly comprehended. The following subjects are considered in this treatise, under various heads: (1) The calibration of apparatus; (2) Tests of the strength of materials; (3) Measurements of liquids and gases; (4) Tests of friction and lubrication; (5) Efficiency-tests, which relate to (*a*) belting and machinery of transmission, (*b*) water-wheels, pumps, and hydraulic motors, (*c*) hot-air and gas engines, (*d*) air-compressors and compressed-air machinery, (*e*) steam-engines, boilers, injectors, and direct-acting pumps.

5. **Efficiency-tests.**—Tests may be made for various objects, the most important being probably that of determining the efficiency, capacity, or strength.

The efficiency of a machine is the ratio of the useful work delivered by the machine to the whole work supplied or to the whole energy received. The limit to the efficiency of a machine is *unity*, which denotes the efficiency of a perfect machine.

The whole work performed in driving a machine is evidently equal to the useful work, plus the work lost in friction, dissipated in heat, etc. The lost work of a machine often consists

of a constant part, and in addition a part bearing some definite proportion to the useful work; in some cases all the lost work is constant.

Efficiency-tests are made to determine the ratio of useful work performed to total energy received, and require the determination of, first, the work or energy received by the machine; second, the useful work delivered by the machine. The friction and other lost work is the difference between the total energy supplied and the useful work delivered. In case the efficiency of the various parts of the machine is computed separately, the efficiency of the whole machine is equal to the product of the efficiencies of the various component parts which transmit energy from the driving-point to the working-point.

The work done or energy transmitted is usually expressed in foot-pounds per minute of time, or in horse-power, which is equivalent to 33,000 foot-pounds per minute, or 550 foot-pounds per second of time.

EXPERIMENTAL ENGINEERING.

REDUCTION OF EXPERIMENTAL DATA.

METHOD OF LEAST SQUARES—NUMERICAL CALCULATIONS—GRAPHICAL REPRESENTATION OF EXPERIMENTS.

CHAPTER I.

APPLICATION OF THE METHOD OF LEAST SQUARES.

IN the following articles the application of this method to reducing observations and producing equations from experimental data is quite fully set forth. The theory of the Method of Least Squares is not given, but it can be fully studied in the work by Chauvenet published by Lippincott & Co., or in the work by Merriman published by John Wiley & Sons.

6. Classification of Errors.—The errors to which all observations are subject are of two classes: *systematic* and *accidental.*

Systematic errors are those which affect the same quantities in the same way, and may be further classified as *instrumental* and *personal.* The instrumental errors are due to imperfection of the instruments employed, and are detected by comparison with standard instruments or by special methods of calibration. Personal errors are due to a peculiar habit of the observer tending to make his readings preponderate in a certain direction, and are to be ascertained by comparison of

observations: first, with those taken automatically; second, with those taken by a large number of observers equally skilled; third, with those taken by an observer whose personal error is known. Systematic errors should be investigated first of all, and their effects eliminated.

Accidental errors are those whose presence cannot be foreseen nor prevented; they may be due to a multiplicity of causes, but it is found, if the number of observations be sufficiently great, that their occurrence can be predicted by the law of probability, and the probable value of these errors can be computed by the METHOD OF LEAST SQUARES.

Before making application of the "Method of Least Squares," determine the value of the systematic errors, eliminate them, and apply the method of least squares to the determination of accidental errors.

7. Probability of Errors.—The following propositions are regarded as axioms, and are the fundamental theorems on which the Method of Least Squares is based:

1st. Small errors will be more frequent than large ones.

2d. Errors of excess and deficiency (that is, results greater or less than the true value) are equally probable and will be equally numerous.

3d. Large errors, beyond a certain magnitude, do not occur. That is, the probability of a very large error is zero.

From these it is seen that the probability of an error is a function of the magnitude of the error. Thus let x represent any error and y its probability, then

$$y = f(x).$$

By combination of the principles relating to the probability of any event Gauss determined that

$$y = ce^{-h^2x^2}, \quad \ldots\ldots\ldots \quad (1)$$

in which c and h are constants, and e the base of the Napierian system of logarithms.

8. Errors of Simple Observations.—It can be shown by calculation that the most probable value of a series of observations made on the same quantity is the arithmetical mean, and if the observations were infinite in number the mean value would be the true value. The *residual* is the difference between any observation and the mean of all the observations. The *mean error* of a *single observation* is the square root of the sum of the squares of the residuals, divided by one less than the number of observations. The *probable error* is 0.6745 time the mean error. The *error of the result* is that of a single observation divided by the square root of their number.

Thus let n represent the number of observations, S the sum of the squares of the residuals; let e, e_1, e_2, etc., represent the residual, which is the difference between any observation and the mean value; let Σ denote the sum of the quantities indicated by the symbol directly following.

Then we shall have

Mean error of a single observation $$\pm \sqrt{\frac{S}{n-1}}. \quad . \quad . \quad (2)$$

Probable error of a single observation $$\pm 0.6745 \sqrt{\frac{S}{n-1}}. \quad (3)$$

Mean error of the result $$\pm \sqrt{\frac{S}{n(n-1)}}. \quad . \quad (4)$$

Probable error of the result $$\pm 0.6745 \sqrt{\frac{S}{n(n-1)}}. \quad (5)$$

In every case $S = \Sigma e^2$.

9. Example.—The following example illustrates the method of correcting observations made on a single quantity:

A great number of measurements have been made to determine the relation of the British standard yard to the

meter. The British standard of length is the distance, on a bar of Bailey's bronze, between two lines drawn on plugs at the bottom of wells sunk to half the depth of the bar. The marks are one inch from each end. The measure is standard at 72° Fah., and is known as the Imperial Standard Yard.

The meter is the distance between the ends of a bar of platinum, the bar being at 0° Centigrade, and is known as the *Mètre des Archives.*

The following are some of these determinations. That made by Clarke in 1866 is most generally recognized as of the greatest weight.

COMPARISON OF BRITISH AND FRENCH MEASURES.

Name of Observer.	Date.	Observed length of meter in inches.	Difference from the mean. Residual = e.	Square of the Residuals. e^2.
Kater	1821	39.37079	− 0.001460	0.0000021316
Hassler	1832	39.38103	+ 8780	0.0000770884
Clarke	1866	39.370432	− 1818	0.0000033124
Rogers	1884	39.37015	− 2100	0.0000044100
Comstock	1885	39.36985	− 0.002400	0.0000057600
Mean value		39.372250		0.0000907024

$$\Sigma e^2 = S = 0.0000907024, \quad n = 5, \quad n(n-1) = 20.$$

$$\text{Mean error of a single observation} = \pm\sqrt{\frac{S}{n-1}} = 0.00476.$$

$$\text{Probable error of single observation} = \pm 0.00317.$$

$$\text{Mean error of mean value} = \pm\sqrt{\frac{S}{n(n-1)}} = 0.00213$$

$$\text{Probable error of mean value} = \pm 0.00142.$$

That is, considering the observations of equal weight, it would be an even chance whether the error of a single observation were greater or less than 0.00317 inch, and the error of the mean greater or less than 0.00142.

10. Combination of Errors.—When several quantities are involved it is often necessary to consider how the errors made upon the different quantities will affect the result.

Since the error is a small quantity with reference to the result, we can get sufficient accuracy with approximate formulæ.

Thus let X equal the calculated or observed result, F the error made in the result; let x equal one of the observed quantities, and f its error. Then will

$$F = f\frac{dX}{dx} \quad . \quad . \quad . \quad . \quad . \quad . \quad . \quad . \quad . \quad (6)$$

in which $\frac{dX}{dx}$ is the partial derivative of the result with respect to the quantity supposed to vary. In case of two quantities in which the errors are F, F', etc., the probable error of the result

$$= \pm \sqrt{F^2 + F'^2}. \quad . \quad . \quad . \quad . \quad . \quad . \quad . \quad (7)$$

11. As an *example*, discuss the effect of errors in counting the number of revolutions, and in measurement of the mean effective pressure, acting on the piston, with regard to the power furnished by a steam-engine. Denote the number of revolutions by n, the mean pressure by p, the length of stroke in feet by l, and the area of piston in square inches by a; the work in foot-pounds done on one side of the piston by W. Then

$$W = plan, \qquad F = lanf,$$

$$\frac{F}{f} = \frac{dW}{dp} = lan, \qquad F' = plaf'.$$

$$\frac{F'}{f'} = \frac{dW}{dn} = pla.$$

The error f in the mean pressure is itself a complicated one, since p is measured from an indicator-diagram and depends on accuracy of the indicator-springs, accuracy of the indicator-motion, and the correct measurement of the indicator-diagram. These errors vary with different conditions. Suppose, however, the whole error to be that of measurement of the indicator-diagram. This is usually measured with a polar planimeter, of which the minimum error of measurement may be taken as 0.02 square inch; with an indicator-diagram three inches in length this corresponds to an error of 0.0067 of an inch in ordinate. In a similar manner the error in the number of revolutions depends on the method of counting: with a hand-counter the best results by an expert probably would involve an error of one tenth of a second; with an attached chronograph the error would be less, and would probably depend on the accuracy with which the results could be read from the chronograph-diagram. The ordinary errors are fully three times those given here.

Take as a numerical example, $a = 100$ square inches, $l = 2$ feet, $n = 300$, $p = 50$ pounds, $f = 0.335$, $f' = 0.5$.

$$F = 20{,}100, \qquad F' = 5{,}000, \qquad W = 3{,}000{,}000.$$

Probable error $= \pm \sqrt{F^2 + F'^2} = 20{,}712$ ft.-lbs., which in this case is 0.0069 of the work done.

12. Deduction of Empirical Formulæ.—Observations are frequently made to determine general laws which govern phenomena, and in such cases it is important to determine what formula will express with least error the relation between the observed quantities.

These results are *empirical* so long as they express the relation between the observed quantities only; but in many cases they are applicable to all phenomena of the same class, in which case they express *engineering* or *physical laws.*

In all these cases it is important that the form of the equation be known, as will appear from the examples to be given later. The form of the equation is often known from the

general physical laws applying to similar cases, or it may be determined by an inspection of the curve obtained by a graphical representation of the experiment. A very large class of phenomena may be represented by the equation

$$y = A + Bx + Cx^2 + Dx^3 + \text{etc.} \quad . \quad . \quad . \quad . \quad (8)$$

In case the graphical representation of the curve indicates a parabolic form, or one in which the curve approaches parallelism with the axis of X, the empirical formula will probably be of the form

$$y = A + Bx^{\frac{1}{2}} + Cx^{\frac{2}{3}} + Dx^{\frac{3}{4}} + \text{etc.} \quad . \quad . \quad . \quad (9)$$

In case the observations show that, with increasing values of x, y passes through repeating cycles, as in the case of a pendulum, or the backward and forward motion of an engine, the characteristic curve would be a sinuous line with repeated changes in the direction of curvature from convex to concave. The equation would be of the form

$$y = A + B_1 \sin \frac{360^\circ}{m}x + B_2 \cos \frac{360^\circ}{m}x + C_1 \sin \frac{360^\circ}{m}2x + C_2 \cos \frac{360^\circ}{m}2x + \text{etc.} \quad . \quad . \quad . \quad (10)$$

Still another form which is occasionally used is

$$y = A + B \sin mx + C \sin^2 mx + \text{etc.} \quad . \quad . \quad (11)$$

13. General Methods.—A method of deducing the empirical formula is illustrated by the following general case:

In a series of observations or experiments let us suppose that the errors (residuals) committed are denoted by e, e', e'',

etc., and suppose that by means of the observations we have deduced the general equations of conditions as follows:

$$\left.\begin{array}{llllll} e & = h & + ax & + by & + cz, \\ e' & = h' & + a'x & + b'y & + c'z, \\ e'' & = h'' & + a''x & + b''y & + c''z, \\ e''' & = h''' & + a'''x & + b'''y & + c'''z, \\ & \text{etc.} & & \text{etc.} & \text{etc.} \end{array}\right\}$$

Let it be required to find such values of x, y, z, etc., that the values of the residuals e, e', e'', e''', etc., shall be the least possible, with reference to all the observations.

If we square both members of each equation in the above group and add them together, member to member, we shall have

$$\begin{aligned} e^2 + e'^2 + e''^2 + e'''^2 + \text{etc.} = {} & x^2(a^2 + a'^2 + a''^2 + \text{etc.}) \\ & + 2x\{(ah + a'h' + a''h'' + \text{etc.}) + a(by + cz + \text{etc.}) \\ & + a'(b'y + c'z + \text{etc.}) + \text{etc.}\} + h^2 + h'^2 + \text{etc.} \end{aligned}$$

This equation may be arranged with reference to x as follows:

$$u = e^2 + e'^2 + e''^2 + \text{etc.} = Px^2 + 2Qx + R + \text{etc.};$$

in which the various coefficients of the different powers of x are denoted by the symbols P, Q, R, etc.

Now in order that these various errors may be a minimum, $e^2 + e'^2 + e''^2 + \text{etc.} = u$ must be a minimum, in which case its partial derivative, taken with respect to each variable in succession, should be separately equal to zero. Hence

$$\frac{du}{dx} = Px + Q = 0;$$

or, substituting the values of P and Q,

$$\begin{aligned} x(a^2 + a'^2 + \text{etc.}) + ah + ah' + \text{etc.} + a(by + cz + \text{etc.}) \\ + a'(b'y + c'z + \text{etc.}) + \text{etc.} = 0 \end{aligned}$$

Similar equations are to be formed for each variable.

From the form of these equations we deduce the principle that in order to find an equation of condition for the minimum error with respect to one of the unknown quantities, as x for example, *we have simply to multiply the second member of each of the equations of condition by the coefficient of the unknown quantity in that equation, take the sum of the products, and place the result equal to zero.* Proceed in this manner for each of the unknown quantities, and there will result as many equations as there are unknown quantities, from which the required values of the unknown quantities may be found by the ordinary methods of solving equations.

14. Example.—As an illustration, suppose that we require the equation of condition which shall express the relation between the number of revolutions and the pressure expressed in inches of water, of a pressure-blower delivering air into a closed pipe. Let m represent the reading of the water-column, and n the corresponding number of revolutions. Suppose that the observations give

for $m = 24$ inches, $n = 297$ revolutions.
" $m = 32$ " $n = 340$ "
" $m = 33$ " $n = 355$ "
" $m = 35$ " $n = 376$ "

Average values for $m = 31$ inches, $n = 342$ revolutions.

Arranging the results in the following form, we have:

Water-column.		Revolutions.	
Observations.	Residuals.	Observations.	Residuals.
24	−7	297	−45
32	+1	340	− 2
33	+2	355	+13
35	+4	376	+34

Assume that the equation of condition is of the form

$$A + Bx + Cx^2 = y.$$

To find those values of A, B, and C which will most nearly satisfy the equation, as shown in the experiment: Taking the values of x, as the residual or difference between the mean and any observation in height of water-column, and the value of y as the corresponding residual in number of revolutions, we have the following equations of condition:

$$\left.\begin{aligned} A - 7B + 49C &= -45, \\ A + B + C &= -2, \\ A + 2B + 4C &= +13, \\ A + 4B + 16C &= +34. \end{aligned}\right\} \text{I.}$$

Multiplying each equation by the coefficient of A in that equation, we have

$$\left.\begin{aligned} A - 7B + 49C &= -45, \\ A + B + C &= -2, \\ A + 2B + 4C &= +13, \\ A + 4B + 16C &= +34. \end{aligned}\right\} \text{II.}$$

Equations of minimum condition of error with respect to A.

$$4A + 0B + 70C = 0. \quad \text{III.}$$

Sum of equations in group II.

Multiplying each equation in group I by the coefficient of B in that equation, we have

$$\left.\begin{aligned} -7A + 49B - 343C &= 315 \\ A + B + C &= -2 \\ 2A + 4B + 8C &= 26 \\ 4A + 16B + 64C &= 136 \end{aligned}\right\} \text{IV.}$$

Equations of minimum condition of error with respect to B.

$$0A + 70B - 270C = 475$$

Sum of equations in group IV.

Multiplying each equation in group I by the coefficient of C in that equation, we have

$$\left.\begin{aligned} 49A - 343B + 2401C &= -2205 \\ A + B + C &= -2 \\ 4A + 8B + 16C &= 52 \\ 16A + 64B + 256C &= 544 \end{aligned}\right\} \text{V.}$$

Equations of minimum condition of error with respect to C.

$$70A - 268B + 2674C = -1611$$

Sum of equations in group V.

The sums of these various equations of minimum condition are the same in number as the unknown quantities, and by combining them the various values of A, B, C, etc., can be determined. We have, in the following case:

$$\left.\begin{aligned} 4A + \ 0B + \ 70C &= \ 0 \\ 0A + \ 70B - \ 270C &= \ 475 \\ 70A - 268B + 2674C &= -1611 \end{aligned}\right\} \text{VI.}$$

Solving the above,

$$A = 1.608; \qquad B = 7.140; \qquad C = -0.0919.$$

Substituting in the original equation of condition,

$$y = 1.608 + 7.140x - 0.0919x^2.$$

To reduce this form to an equation expressing the probable relation of the number of revolutions to the height of the water-column, we must substitute for y its value, $n - 342$; and for x its value, $m - 31$. In this case we shall have

$$n - 342 = 1.608 + 7.14(m - 31) - 0.0919(m - 31)^2;$$

which reduced gives the following equation as the most probable value in accordance with the observations:

$$n = 34.952 + 13.02m - 0.0919m^2;$$

which is the empirical equation sought.

15. **Rules and Formulæ for Approximate Calculation.**— When in a mathematical expression some numbers occur which are very small with respect to certain other numbers, and which are therefore reckoned as corrections, they may often be expressed with sufficient accuracy by an approximate formula, which will largely reduce the labor of computation.

On the principle that the higher powers of very small quantities may be neglected with reference to the numbers themselves, we can form a series by expansion by the binomial formula, or by division, in which, if we neglect the higher powers of the smaller quantities, the resulting formulæ become much more simple, and are usually of sufficient accuracy.

Thus, for instance, let δ equal a very small fraction; then the expression

$$(a+\delta)^m = a^m + ma^{m-1}\delta + m\frac{(m-1)}{2}a^{m-1}\delta^2 + \text{etc.},$$

will become $a^m + ma^{m-1}\delta$, if the higher powers of δ be neglected. If δ is equal to $\frac{1}{1000}$ part of a, the error which results from omitting the remaining terms of the series becomes very small, as in this case the value of $\delta^2 = \frac{1}{1000000}a$.

The following table of approximate formulæ presents several cases which can often be applied with the effect of materially reducing the work of computation, without any sensible effect on the accuracy:

$$(1+\delta)^m = 1 + m\delta, \qquad (1-\delta)^m = 1 - m\delta; \quad \ldots\ldots \quad (12)$$

$$(1+\delta)^2 = 1 + 2\delta, \qquad (1-\delta)^2 = 1 - 2\delta; \quad \ldots\ldots \quad (13)$$

$$\sqrt{1+\delta} = 1 + \tfrac{1}{2}\delta, \qquad \sqrt{1-\delta} = 1 - \tfrac{1}{2}\delta; \quad \ldots\ldots \quad (14)$$

$$(1+\delta)^3 = 1 + 3\delta, \qquad (1-\delta)^3 = 1 - 3\delta; \quad \ldots\ldots \quad (15)$$

$$\frac{1}{1+\delta} = 1 - \delta, \qquad \frac{1}{1-\delta} = 1 + \delta; \quad \ldots\ldots \quad (16)$$

$$\frac{1}{(1+\delta)^2} = 1 - 2\delta, \qquad \frac{1}{(1-\delta)^2} = 1 + 2\delta; \quad \ldots\ldots \quad (17)$$

$$\frac{1}{\sqrt{1+\delta}} = 1 - \tfrac{1}{2}\delta, \qquad \frac{1}{\sqrt{1-\delta}} = 1 + \tfrac{1}{2}\delta; \quad \ldots\ldots \quad (18)$$

$$(1+\delta)(1+\epsilon)(1+\zeta)\ldots = 1 + \delta + \epsilon + \zeta; \quad \ldots\ldots \quad (19)$$

$$(1-\delta)(1-\epsilon)(1-\zeta)\ldots = 1 - \quad - \epsilon - \zeta; \quad \ldots\ldots \quad (20)$$

$$(1 \pm \delta)(1 \pm \epsilon)(1 \pm \zeta)\ldots 1 \pm \delta \pm \epsilon \pm \zeta; \quad (21)$$

$$\frac{(1 \pm \delta)(1 \pm \zeta)}{(1 \pm \epsilon)(1 \pm \eta)} \quad \ldots 1 \pm \delta \pm \zeta \mp \epsilon \mp \eta; \quad (22)$$

$$\sqrt{pn} = \frac{p+n}{2}; \quad (23)$$

$$\sin(x + \delta) = \sin x + \delta \cos x; \quad (24)$$

$$\cos(x + \delta) = \cos x - \delta \sin x; \quad (25)$$

$$\tan(x + \delta) = \tan x + \frac{\delta}{\cos^2 x} = \tan x + \delta \sec^2 x; \quad (26)$$

$$\sin(x - \delta) = \sin x - \delta \cos x; \quad (27)$$

$$\cos(x - \delta) = \cos x + \delta \sin x. \quad (28)$$

16. The Rejection of Doubtful Observations.*—It often happens that in a set of observations there are certain values which are so much at variance with the majority that the observer rejects them in adjusting the results. This might be done by application of Rule 3, Article 7, provided the magnitude of the errors which could not occur were definitely determined; but to reject such observations without proper rules is a dangerous practice, and not to be recommended.

This brings into sight a class of errors which we may term *mistakes*, and which are in no sense errors of observation, such as we have been considering. Mistakes may result from various causes, as a misunderstanding of the readings, or from recording the wrong numbers, inverting the numbers, etc.; and when it is certainly shown that a mistake has occurred, if it cannot be corrected with certainty, the observations should be rejected. *After making allowance for all constant errors, no results except those which are unquestionably mistakes should be rejected.*

The remaining discrepancies will then fall under the head

* See Adjustment of Observations, by T. W. Wright. N. Y., D. Van Nostrand.

of *irregular* or *accidental errors*, and are to be corrected as explained in the preceding articles; the effect of a large error is largely or wholly compensated for by the greater frequency of the smaller errors.

17. When to Neglect Errors.—Nearly all the observations taken on any experimental work are combined with observations of some other quantity in order to obtain the desired result. Thus, for example, in the test of a steam-engine, observations of the number of revolutions and of the mean effective pressure acting on the piston are combined with the constants giving the length of stroke and area of piston. The product of these various quantities gives the work done per unit of time.

All of these quantities are subject to correction, and it is often important to allow for such correction in the result. Just how important these corrections may be depends on the degree of accuracy which is sought.

As the degree of accuracy increases, the number of influencing circumstances increases as well as the difficulty of eliminating them; hence this part of the work is often the most difficult and sometimes the most important. To what limit these corrections may be carried depends on our knowledge of the laws which govern the experiments in question, as well as the accuracy with which the observations may be taken. It is evidently unnecessary to correct by abstruse and difficult calculation for influences which make less difference than the least possible unit to be determined by observation, and this consideration should no doubt determine whether or not corrections should be taken into account or neglected.

Thus, in the case of the test of a steam-engine, we have errors made in obtaining the engine constants, i.e., length of stroke and area of piston. These errors may be simply of measurement, or they may be due to changes in the temperature of the body measured. The errors of measurement depend on accuracy of the scale used, care with which the observations are made, and can be discussed as direct observations on a single quantity. The errors due to change of temperature can be cal-

culated if observations showing the temperature are taken, and if the coefficient of expansion is known. A calculation will, in case of the steam-engine constants referred to above, show that in general the probable error of observation is many times in excess of any change due to expansion, and hence the latter may be neglected. The effect of errors in the other quantities has already been discussed in Article 11.

It is to be remembered that the method of correction outlined in the "Method of Least Squares" applies only to those accidental and irregular errors which cannot be directly accounted for by any imperfection in instruments or peculiar habit of the observer; usually the correction for instrumental and personal errors is to be made to the observations themselves, before computing the probable error.

18. Accuracy of Numerical Calculations.—The results of all experiments are expressed in figures which show at best only an approximation to the truth, and this accuracy of expression is increased by extending the number of decimal figures. It is, however, evidently true that the mere statement of an experiment, with the results expressed in figures of many decimal places, does not of necessity indicate accurate or reliable experiments. The accuracy depends not on the number of decimal places in the result, but on the least errors made in the observations themselves.

It is generally well to keep to the rule that the result is to be brought out to one more place than the errors of observation would indicate as accurate: that is, the last decimal place should make no pretensions of accuracy; the one preceding should be pretty nearly accurate. In doubtful cases have one place too many rather than too few. No mistake, however, should be made in the numerical calculations; and these, to insure accuracy, should be carried for one place more than is to be given in the result, otherwise an error may be made that will affect the last figure in the result. The extra place is discarded if less than 5; but if 5 or more it is considered as 10, and the extra place but one increased by 1.

In performing numerical calculations, it will be entirely

unnecessary to attempt greater accuracy of computation than can be carried out by a four-place table of logarithms, except in cases where the units of measurement are very small and the numbers correspondingly great. In general, sufficient accuracy can be secured by the use of the pocket slide-rule, the readings of which are hardly as accurate as a three-place table of logarithms. The slide-rule will be found of great convenience in facilitating numerical computations, and its use is earnestly advised.

19. Methods of representing Experiments Graphically.—Nearly all experiments are undertaken for the purpose of ascertaining the relation that one variable condition bears to another, or to the result. All such experiments can be represented graphically by using paper divided into squares. The result of the experiment is represented by a curve, drawn as follows: Lay off in a horizontal direction, using one or more squares as a scale, distances corresponding with the record values of one of the various observations, and in a similar manner, using any convenient scale, lay off, in a vertical direction from the points already fixed, distances proportional to the results obtained. A line connecting these various points often will be more or less irregular, but will represent by its direction the relation of the results to any one class or set of observations. A connecting line may form a smooth curve, but if, as is usually the case, the line is irregular and broken, a smooth curve should be drawn in a position representing the average value of the observations. The points of observation, located on the squared paper as described, should be distinctly marked by a cross, or a point surrounded with a circle, triangle, or square; and farther, all observations of the same class should be denoted by the same mark; so that the relation of the curve to the observations can be perceived at any time.

The value of the graphical method over the numerical one depends largely on the well-known fact that the mind is more sensitive to form, as perceived by the eye, than to large numbers obtained by computation. Indeed, when numbers are

used, the averages of a series of observations are all that can be considered, and the effect of a gradual change, and the relation of that change to the result, which is often more important than any numerical determination, is entirely disregarded, and often not perceived.

Every experiment should be expressed graphically, and students should become expert in interpreting the various curves produced. A sample of paper well suited for representing experiments is bound in the back portion of the present work.

All important tests should also be accompanied by a *graphical log;* in this case time is taken as the abscissa, and the various observations corresponding to the time are plotted at convenient heights. The variation of these quantities from a horizontal line shows in a striking way irregularities which occur during the test, a horizontal line indicating uniform conditions.

20. Area of the Diagram represents Work done.—In case the horizontal distances or abscissæ represent space passed through, and the vertical distances or ordinates represent the force acting, then will the area included between this curve and the initial lines, represent the product of the mean force into the space passed through,—or, in other words, the work done. The units in which the work will be expressed will depend on the scales adopted. If the unit of space represent feet, the unit of force pounds, the results will be in foot-pounds. The initial lines in each case must be drawn at distances corresponding to the scales adopted, and must represent, respectively, zero-force and zero-space.

21. Autographic Diagrams.—In various instruments used in testing, a diagram is drawn automatically, in which the abscissa corresponds to the space passed through, the ordinate to the force exerted, and the area to the work done. A familiar illustration is the steam-engine indicator-diagram, in which horizontal distance corresponds to the stroke of the piston of the engine, and vertical distance or ordinates to the pressure acting on the piston at any point. The absolute amount of the pressures may be determined by reference to the

atmospheric line. The distance vertically between the lines drawn on the forward and back strokes of the engine is the effective pressure acting on the piston at the given position of its stroke; the mean length of all such lines is the mean effective pressure utilized in work. The vertical distance from any point on the atmospheric line to the curve drawn while the piston is on its forward stroke is the forward pressure, the corresponding distance to the back-pressure line is the back pressure, and the areas between these respective curves give effective or total work per revolution.

An autographic device is put on many testing-machines: in this case the ordinates of the diagram drawn represent pressure applied to the test specimen, and abscissæ represent the stretch of the specimen. This latter corresponds to the space passed through by the force, so that the area of the diagram included between the curve and line of no pressure represents the work done,—at least so far as the resistance of the test-piece is equal to the pull exerted, which is the case within the elastic limit only.

Various dynamometers construct autographic diagrams, in which ordinates are proportional to the force exerted and abscissæ to the space passed through, so that the area is proportional to the work done. The diagram so drawn would represent the work done equally well were ordinates proportional to space passed through, and abscissæ to the force exerted, but such diagrams are not often used.

22. Reduction of Diagrams.—In the *reduction* of *autographic diagrams* the process is reversed as compared with the construction of the diagram. The important data required are, first, the position of initial lines of force and of space; second, the respective scales of force and of space. In computing the work, it is usually customary to find the mean pressure from the diagram, and multiply this result by the space through which the body actually moves, instead of multiplying by the length of the diagram.

To find the length of the mean ordinate, from which the mean pressure is easily obtained, vertical lines are drawn so

close together that the portion of the curve included between them is sensibly straight; the sum of these lines, which may be expeditiously taken by transferring them successively to a strip of paper and measuring the total length, is found; and this result divided by the number gives the length of the mean ordinate. This length multiplied by the scale gives the pressure. An integrating instrument, the planimeter, is more frequently used for this purpose, and gives more accurate results. The theory of the instrument and method of using is of great importance to engineers, and is given in full in the following chapter.

Logarithmic Cross-section Paper is very convenient for the reduction of certain forms of curves to algebraic or analytic equations. The rulings of this paper are made at distances proportional to the logarithms of the numbers which represent the ordinates and abscissæ. Any curve which may be represented by a simple logarithmic or exponential equation would be represented on paper ruled in this way by a straight line. Thus, an equation of the general form $y = Bx^n$ can be reduced so that $\log y = \log B + n \log x$, which is the equation of a straight line in logarithmic units. In this equation n is the tangent of the angle which the line makes with the axis of abscissæ, and B is the intercept on this axis from the origin. Paper ruled in this manner can be obtained from most dealers in technical supplies. In case it cannot be obtained, ordinary cross-section paper, as shown in the Appendix to this book, may be used by numbering the graduations on the axes of abscissæ and ordinates as proportional to the logarithms of the distances from the origin.

CHAPTER II.

APPARATUS FOR REDUCTION OF EXPERIMENTAL DATA AND FOR ACCURATE MEASUREMENT.

23. The Slide-rule.—The slide-rule is made in several forms, but it consists in every case of a sliding scale, in which the distance between the divisions, instead of corresponding to the numbers marked on the scale, corresponds to the logarithms of these numbers. This scale can be made to slide past another logarithmic scale, so that by placing them in proper positions there may be shown the sum or difference of these scales, and the number corresponding. As these scales are logarithmic, the number corresponding to the sum is the product, that corresponding to the difference is the quotient. Operations involving involution and evolution can also be performed. Scales showing the logarithmic functions of angles are also usually supplied.

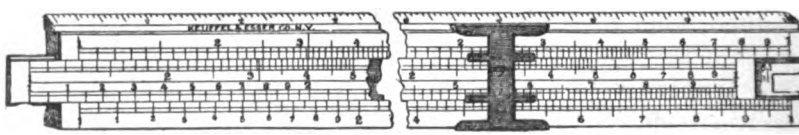

FIG. 1.—THE SLIDE-RULE.

The usual form of the slide-rule is shown in Fig. 1. This form carries four logarithmic scales, one on either edge of the slide, and one above and one below. Either scale can be used; that above is generally to one half the scale of the lower, and while not quite as accurate, is more convenient than the one below. The trigonometrical scales are on the back of the slide.

The principal use to the computer is the solution of problems in multiplication and division.

The following directions for use of the plain slide-rule, which is ordinarily employed, give a simple practical method of multiplying or dividing by the slide-rule, experience having shown that when these processes are fully understood the others are mastered without instruction.

Suppose that a student has a slide-rule of the straight kind, and similar to the one in Fig. 1, which consists of a stationary scale, a sliding-scale, and a sliding pointer or runner. These parts we will term, respectively, the "scale," the slide, and the runner.

24. Directions for using the Slide-rule.—Holding the rule so that the figures are right side up, four graduated edges will be seen, of which only the upper two are used in the problem we are about to describe. (The method of using the two lower scales would be exactly the same, the difference being, that they are twice as long, and that the slide is above instead of below the scale.)

Move the slide to such a position that the graduations agree throughout the length of the scale, and place the runner at a division marked 1, and the rule is ready for use. Arrange the factors to be dealt with in the form of a fraction, with one more factor in numerator than in denominator, units being introduced if necessary to make up deficiencies in the factors.

Thus, to multiply 6 by 7 by 3 and divide by 8 times 2, arrange the factors as follows:

$$\frac{6 \times 7 \times 3}{8 \times 2}.$$

The factors in the numerator show the successive positions which the runner must take; those in the denominator the positions of the slide. Thus, to solve above example, start (1) with runner at 6 on the scale, always reading from same side of runner; (2) bring figure 8 on slide to runner; (3) move runner to 7 on slide: the result can now be read on the scale; (4)

bring 2 on slide to runner; (5) move runner to 3 on slide. The result is read directly on the scale at position of runner.

Another example: Multiply 11 by 6 by 7 by 8, and divide by 31.

In this case arrange the factors

$$\frac{11 \times 6 \times 7 \times 8}{1 \times 1 \times 31}.$$

Start with runner at 11 on scale, move 1 on slide to runner, move runner to 6 on slide, move 1 on slide to runner, runner to 7 on slide, move 31 on slide to runner, runner to 8 on slide: read result on scale at runner.

The numbers on the slide-rule are to be considered significant figures, and to be used without regard to the decimal point. Thus the number on the rule for 8 is to be used as .8 or 80 or 800, as may be desired, even in the same problem. The significant figures in the result are readily determined by a rough computation. In case the slide projects so much beyond the scale, that the runner cannot be set at the required figure on the slide, bring the runner to 1 on the slide, then move the slide its full length, until the other 1 comes under the runner. Then proceed according to directions above; i.e., move runner to number on slide, and read results on the scale:

$$\frac{6 \times 25 \times 3.5 \times 7 \times 7 \times 31}{\pi \times 426 \times 914 \times 1 \times 1} = ?$$

Begin with the first factor in the numerator, and multiply and divide alternately,—

$$\times 6, \quad \div \pi, \quad \times 25, \quad \div 426, \quad \times 3.5, \quad \div 914, \quad \text{etc.,}—$$

until all the factors have been used, checking them off as they are used, to guard against skipping any or using one twice.

To multiply, move the runner; to divide, move the slide: in either case see that the runner points to a graduation on the slide corresponding to the factor. The result at the end or at any stage of the process is given by the runner on the stationary scale. Or, to be more exact, the significant figures of the result are given, for in no case does the slide-rule show where to place the decimal point. If the decimal point cannot be located by inspection of the factors, make a rough cancellation.

Involution and evolution are readily mastered by simple practice. Slide-rules working on the same principle are frequently made with circular or cylindrical scales, which in the Thacher and Fuller instruments are of great length.

Thacher's calculating instrument consists of a cylinder 4 inches in diameter and 18 inches long, working within a framework of triangular bars. Both the cylinders and bars are graduated with a double set of logarithmic scales, and results in multiplication or division can be obtained from one setting of the instrument, hence it is especially convenient when a series of numbers are to be multiplied by a common factor. The scales in this instrument are about 50 feet in length, and results can be read usually to five places.

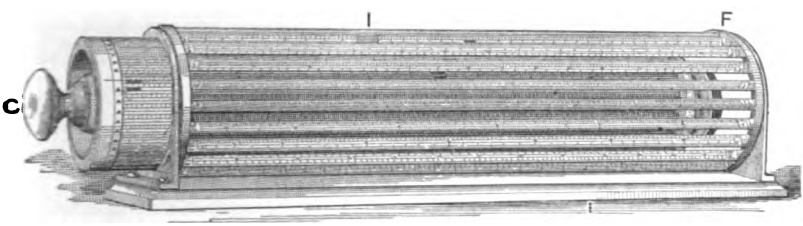

FIG. 2.—THACHER'S CALCULATING INSTRUMENT.

The instrument is similar to the straight slide-rule previously described, the scale on the triangular bars corresponding to the stationary scale, that on the cylinder to the sliding scale, and a triangular index *I* to the sliding pointer or runner. The method of using is essentially similar to that of the plain slide-rule;

thus, to solve an example of the form a/b, put the runner I on the triangular scale at the number corresponding to a, bring the number corresponding to b on the cylindrical scale to register with a on the triangular scale; the respective numbers on the trianglar scale and cylinder will in this position all be in the ratio of a to b, and the quotient will be read by noting that number on the triangular scale which registers with 1 on the cylindrical scale. The product of this quotient by any other number will be obtained by reading the number on the triangular scale registering with the required multiplier on the cylindrical scale.

Fuller's slide-rule consists of a cylinder C which can be moved up or down and turned around a sleeve which is attached to the handle H. A single logarithmic scale, 42 feet in length,

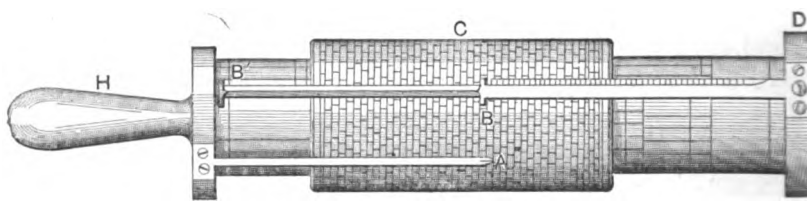

FIG. 3.—THE FULLER SLIDE-RULE.

is graduated around the cylinder spirally, and the readings are obtained by means of two pointers or indices, one of which, A, is attached to the handle, and the other, B, to an axis which slides in the sleeve. This instrument is not well adapted for multiplying or dividing a series of numbers by a constant, since the cylinder must be moved for every result. The instrument is, however, very convenient for ordinary mathematical computations, and the results may be read accurately to four decimal places.

The method of using the instrument is as follows: Call the pointer A, fixed to the handle, the *fixed pointer*, the other BB', which may be moved independently as the *movable index*. To use the instrument, as for example in performing the operation indicated by $(a \times b) \div c$, set the fixed pointer A to the first number in the numerator, then bring the movable index

B to the first figure in the denominator; then move the cylinder C until the second figure in the numerator appears under the movable index, finally read the answer on the cylinder C underneath the fixed pointer A.

In general, to divide with this instrument move the index B; to multiply, move the cylinder C; read results under the fixed pointer A. The movable index BB' has two marks, one at the middle, the other near the end of the pointer, either of which may be used for reading, as convenient, their distance apart corresponding to the entire length of the scale on the cylinder C.

25. The Vernier.—The *vernier* is used to obtain finer subdivisions than is possible by directly dividing the main scale, which in this discussion we will term the *limb*.

The vernier is a scale which may be moved with reference to the main scale or limb, or, *vice versa*, the vernier is fixed and the limb made to move past it.

The vernier has usually one more subdivision for the same distance than the limb, but it may have one less. The theory of the vernier is readily perceived by the following discussion. Let d equal the value of the least subdivision of the limb; let n equal the number of subdivisions of the vernier which are equal to $n - 1$ on the limb. Then the value of one subdivision on the vernier is $d\left(\frac{n-1}{n}\right)$.

The difference in length of one subdivision on the limb and one on the vernier is

$$d - d\left(\frac{n-1}{n}\right) = \frac{d}{n},$$

which evidently will equal the least reading of the vernier, and indicates the distance to be moved to bring the first line of the vernier to coincide with one on the limb. In case there is one more subdivision on the limb than on the vernier for the same distance, the interval between the graduations on the vernier is greater than on the limb, and the vernier must be

behind its zero-point with reference to its motion, and hence is termed *retrograde*. The formula for this case, using the same notation as before, gives $d\left(\frac{n+1}{n}\right) - d = \frac{d}{n}$ for the least reading.

The following method will enable one to readily read any vernier: 1. Find the value of the least subdivision of the limb. 2. Find the number of divisions of the vernier which corresponds to a number one less or one greater than that on the limb: the quotient obtained by dividing the least subdivision of the limb by this number is the value of the least reading of the vernier. The following rules for reading should be carefully observed:

Firstly. *Read the last subdivision of the limb passed over by the zero of the vernier on the scale of the limb as the reading of the limb.*

Secondly. *Look along the vernier until a line is found which coincides with some line on the limb. Read the number of this line from the scale of the vernier. This number multiplied by the least reading of the vernier is the reading of the vernier.*

Thirdly. The sum of these readings is the one sought.

Thus, in Fig. 5, page 31, (1) the reading of the limb is 4.70 at a; (2) that of the vernier is 0.03; (3) the sum is 4.73.

26. The Polar Planimeter.—The planimeter is an instrument for evaluating the areas of irregular figures, and in some one of its numerous forms is extensively used for finding the areas of indicator and dynamometer diagrams.

The principal instrument now in use for this purpose was invented by Amsler and exhibited at the Paris Exposition in 1867. This form is now generally known as Amsler's Polar Planimeter; as most of the other instruments are modifications of this one, it is important that it be thoroughly understood.

The general appearance of the instrument is shown in Fig. 4, from which it is seen that it consists of two simple arms PK and FK, pivoted together at the point K. The arm PK during use is free to rotate around the point P, and is held in place by a weight. The arm KF carries at one end a tracing-point, which is passed around the borders of the area to be integrated

It also carries a wheel, whose axis is in the same vertical plane with the arm KF, and which may be located indifferently between K and F, or in KF produced. It is usually located in KF, produced as at D. The rim of this wheel is in contact with the paper, and any motion of the arm, except in the direction of its axis, will cause it to revolve. A graduated scale with a vernier denotes the amount of lineal travel of its circumference. This wheel is termed the *record-wheel.*

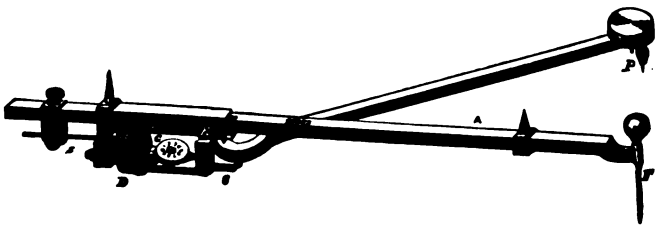

FIG. 4.—AMSLER'S POLAR PLANIMETER.

The detailed construction of the record-wheel, and the arrangement of the counter G, showing the number of revolutions,

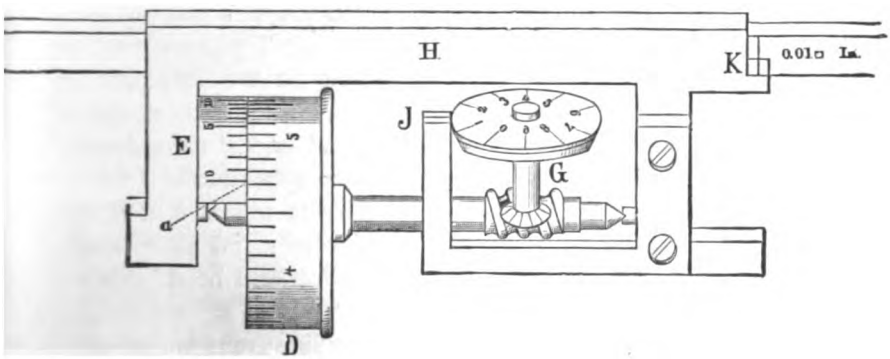

FIG. 5.—THE RECORD-WHEEL. AMSLER'S POLAR PLANIMETER.

is shown in Fig. 5. The wheel D is subdivided into a given number of parts, usually 100; the value of one of these parts is to be obtained by dividing the circumference of the rim of the wheel which is in contact with the paper by the number of

divisions. This result will give the value of the least division on the limb; this is subdivided by an attached vernier, in this particular case to tenths of the reading of the limb, so that the least reading of the vernier is one thousandth of that of one revolution.

27. Theory of the Instrument. (See Fig. 9.)—*The Zero-circle.*—If the two arms be clamped so that the plane of the record-wheel intersects the centre P, and be revolved around P, the graduated circle will be continually travelling in the direction of its axis, and will evidently not revolve. A circle generated under such a condition around P as a centre is termed the zero-circle. If the instrument be unclamped and the tracing-point be moved around an area in the direction of the hands of a watch outside the zero-circle, the registering wheel will give a positive record; while if it be moved in the same direction around an area inside the zero-circle, it will give a negative record. This fact makes it necessary, in evaluating areas that are very large and have to be measured by swinging the instrument completely around P as a centre, to know the area of this zero-circle, which must be added to the determination given by the instrument, since for such cases that circumference is the initial point for measurement.

Geometrical and Analytical Demonstration.—If a straight line mn move in a plane, it will generate an area. This area may be considered positive or negative according to the direction of motion of the line. In Fig. 6, let the paths of the ends m and n of the line be the perimeters of the areas A and B respectively; then it is at once apparent that the net area generated is $A+C-C-B$ or $A-B$. The immediate corollary to this is that if the area B be reduced in width to zero, i.e., become a line along which n travels back and forth, the area swept over will be A, around which m is carried.

Analyzing a differential motion of the line from mn to $m'n'$ (Fig. 8), it may be broken up into three parts: a movement perpendicular to the line, giving area ldp; a movement in the direction of the length of the line, giving no area; and a movement of rotation about one end, giving as area $\frac{1}{2}l^2d\theta$. The total differential of area is then $dA=ldp+\frac{1}{2}l^2d\theta$. l is always a constant

during the operation of a planimeter, so that $A = \int dA = l \int dp + \frac{1}{2} l^2 \int d\theta$.

The common use of a planimeter is that typified in Fig. 7, where the tracing-point is carried around the area to be measured, while the other end of the tracing-arm is guided back and forth along some line. The guide-line is usually either a straight line or an arc of a circle. When the tracing-point has returned to its initial position the net angle turned through by the tracing-arm, or $\int d\theta$, is zero. Hence $A = l \int dp$ simply. But $\int dp$ is the net distance the arm has moved perpendicular to itself. Call this R, and there results the equation of the planimeter $A = l \cdot R$.

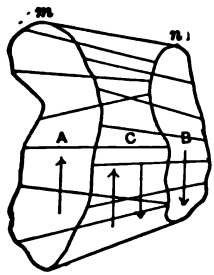

FIG. 6.

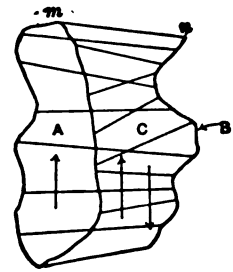

FIG. 7.

If the polar planimeter is so used as to bring in the zero-circle, the case is that of Fig. 6, each end of the line describing an area. The tracing-arm sweeps over the difference between the area described by T (Fig. 9) and the circle made by G about P as centre. This difference-area is not, however, recorded by the planimeter because the $\int d\theta$ is now 2π instead of zero, T making a complete revolution about G. The linear turning of the edge of the recording-wheel is $\int dp - 2\pi n$, where n is the distance from guided point G to the plane of the wheel. The effect on the reading is the same as if the radius PG were increased. The

zero-circle is traced by T when the plane of W passes through P. Then $\int dp = 2\pi n$, and the wheel records zero.

In practice the area described by the tracing-point is found by adding to the area of the zero-circle the area recorded by the wheel, taking account of the algebraic sign of the latter.

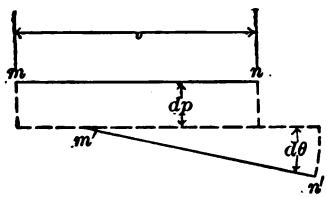

FIG. 8.

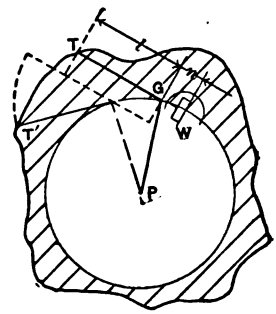

FIG. 9.

The following demonstration is of German origin and, although less general in its nature, is retained for the reason that it is more satisfactory to some minds than the one given above.

Movement of the Record-wheel. (Fig. 10.)—From the preceding discussion it is seen that the record-wheel does not register, so long as its plane is radial, or so long as angle $ED'F'' = 90°$. The amount of rotation due to variation in the angle EJD between the arms is, if an area be completely circumscribed, equal in opposite directions, and hence does not affect the result, so that it is necessary to discuss merely the case of motion around the pole E, with the angle EJD fixed. Thus, for instance, suppose angle EJD to remain constant, and the tracing-point to swing through the infinitesimal angle $F''EF$, designated by $d\theta$, the record-wheel would move near the path DD' more or less irregularly, but subtending an equal angle DED'. The component of this motion which constitutes the record is OD', designated by dR, which is the projection of

this path on a perpendicular to JF. Since DED' is infinitesimal, and $d\theta = \tan d\theta$, we have

$$DD' = DEd\theta; \quad \text{also} \quad dR = OD' = DD' \cos ED'D;$$

but $ED'D = EDO$ from similar triangles. Hence

$$dR = ED \cos EDOd\theta.$$

Denote the length of arm EJ by m, the length of arm JF from pivot to tracing-point by l, the distance JD from pivot to record-wheel by n, the angle EJD by B. Let fall a perpendicular from E on FD, or FD produced at O. Then we have

$$ED \cos EDO = OD = JO - JD = m \cos B - n.$$

Hence

$$dR = (m \cos B - n)d\theta. \quad . \quad . \quad . \quad . \quad . \quad . \quad . \quad (1)$$

Second, the infinitesimal area $FtF''t'$, lying adjacent to the zero-circle.—Let $EF = r$, let $EF'' = r'$, the radius of the zero-circle. Let $dA =$ the area sought. Let $d\theta = FEt$. Then

$$\text{area } FEt = \tfrac{1}{2}r^2d\theta,$$

and

$$\text{area } F''Et' = \tfrac{1}{2}r'^2d\theta.$$

Then

$$dA = FEt - F''Et' = \tfrac{1}{2}(r^2 - r'^2)d\theta. \quad . \quad . \quad . \quad (2)$$

From the oblique triangle EJF,

$$r^2 = m^2 + l^2 + 2ml \cos B. \quad . \quad . \quad . \quad . \quad . \quad (3)$$

From the right triangle $ED'F''$,

$$r'^2 = m^2 + l^2 + 2nl. \quad . \quad . \quad . \quad . \quad . \quad . \quad . \quad . \quad (4)$$

Substituting the values of r^2 and r'^2 in equation (2), we have

$$dA = l(m \cos B - n)d\theta. \quad . \quad . \quad . \quad . \quad . \quad . \quad . \quad (5)$$

By comparing equation (5), the differential equation for the area, with equation (1), the corresponding equation for the

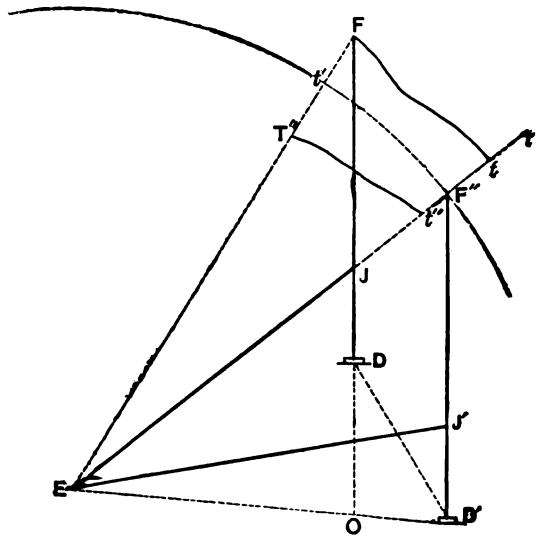

FIG. 10.—POLAR PLANIMETER.

record, we see that

$$dA = ldR; \quad . \quad . \quad . \quad . \quad . \quad . \quad . \quad . \quad (6)$$

or by integration between limits 0 and R, since l is a constant,

$$A = lR. \quad . \quad . \quad . \quad . \quad . \quad . \quad . \quad . \quad (7)$$

This shows that the *area is equal to the length of arm from pivot to the tracing-point, multiplied by the space registered*

on the circumference of the record-wheel, and is independent of the other dimensions of the instrument.

That this is true for areas not adjacent to the zero-circle, or for areas partly inside and out, can readily be proved by subtracting the areas between the zero-circle and the given area, or by a similar process. Hence the demonstration is general.

The Amsler instrument is usually constructed so that the arm l is adjustable in length, and consequently it may be made available for any scale or for various units. Graduations are engraved on the arm which show the length required to give a record in a given scale or for given units.

The *area of the zero-circle* is usually engraved on the top of the arm l. In case it is not given, it may be found by evaluating the areas of two circles of known area, each greater than the area of the zero-circle $\pi r'^2$. Let the areas of such circles be respectively C and C', and the corresponding readings of the record-wheel R and R', in proper units. Then we have

$$C = \pi r'^2 + R \text{ and } C' = \pi r'^2 + R',$$

from which

$$2\pi r'^2 = C + C' - (R + R'). \quad . \quad . \quad . \quad . \quad . \quad . \quad . \quad (8)$$

Having found r'^2, we can compute n, since $r'^2 = m^2 + l^2 + 2nl$, and m and l can both be obtained from measurement.

28. Forms of Polar Planimeters.—Polar planimeters are made in two forms: 1. With the pivot J, Fig. 10, fixed. 2. With pivot J movable, so that the arm l between pivot and tracing-point may be varied in length. Since the area is in each case equal to the length of this arm, multiplied by the lineal space R moved through by the record-wheel, we have in the first case, since l is not adjustable, the result always in the same unit, as square inches or square centimeters. In this case it is

customary to fix the circumference of the record-wheel and compute the arm l so as to give the desired units.

For example, the circumference of the record-wheel is assumed as equal to 100 divisions, each one-fortieth of an inch, thus giving us a distance of 2.5 inches traversed in one revolution. The diameter corresponding to this circumference is 0.796 inch, which is equal to 2.025 centimeters. The distance from pivot to tracing-point can be taken any convenient distance: thus, if the diameter of the record-wheel is as above, and the length of the arm be taken as 4 inches, the area described by a single revolution of the register-wheel will be $2.5 \times 4 = 10.0$ square inches.

Since there were 100 divisions in the wheel, the value of one of these would be in this case 0.1 square inch. This would be subdivided by the attached vernier into ten parts, giving as the least reading one one-hundredth of a square inch. By making the arm larger and the wheel smaller, readings giving the same units could be obtained.

The formula expressing this reduction is as follows: Let d equal the value of one division on the record-wheel; let l equal the length of the arm from pivot to tracing-point; let A equal the area, which must evidently be either 1, 10, or 100 in order that the value of the readings in lineal measures on the record-wheel shall correspond with the results in square measures. Then by equation (7) we shall have, supposing 100 divisions,

$$100\ dl = A; \quad . \quad . \quad . \quad . \quad . \quad . \quad . \quad . \quad . \quad (8)$$

$$l = \frac{A}{100d}. \quad . \quad . \quad . \quad . \quad . \quad . \quad . \quad . \quad (9)$$

If $A = 10$ square inches and $d = \frac{1}{40}$ inch,

$$l = \frac{10}{2.5} = 4.$$

If $A = 10$ square inches and $d = \frac{1}{10}$ inch,

$$l = \frac{10}{2} = 5.$$

The length of the arm from centre to the pivot has no effect on the result unless the instrument makes a complete revolution around the fixed point E, in which case the area of the zero-circle must be considered. It is evident, however, that this arm must be taken sufficiently long to permit free motion of the tracing-point around the area to be evaluated.

The second class of instruments, shown in Fig. 2, are arranged so that the pivot can be moved to any desired position on the tracing-arm KF, or, in other words, the length can be changed to give readings in various units. The effect of such a change will be readily understood from the preceding discussion.

29. The Mean Ordinate by the Polar Planimeter.— If we let p equal the length of the mean ordinate, and let L equal the length of the diagram, then the area $A = Lp$, but the area $A = lR$ [eq. (7)]. Therefore $Lp = lR$, from which

$$l \div L = p \div R. \quad . \quad . \quad . \quad . \quad . \quad . \quad . \quad (10)$$

In an instrument in which l is adjustable, it may be made the length of the area to be evaluated. Now if l be made equal L, $p = R$. *That is, if the adjustable arm be made equal to the length of the diagram, the mean ordinate is equal to the reading of the record-wheel, to a scale to be determined.*

The method of making the adjustable arm the length of the diagram is facilitated by placing a point U on the back of the planimeter at a convenient distance back of the tracing-point F and mounting a similar point V at the same distance back of the pivot C; then in all cases the distance UV will be equal to the length of the adjustable arm l. The instrument is readily set by loosening the set-screw S and sliding the frame

carrying the pivot and record-wheel until the points UV are at the respective ends of the diagram to be traced, as shown in Fig. 11.

In the absence of the points U and V the length of the diagram can be obtained by a pair of dividers, and the distance of the pivot C from the tracing-point F made equal to the length of the diagram.

In this position, if the tracing-point be carried around the diagram, the reading will be the mean ordinate of the diagram

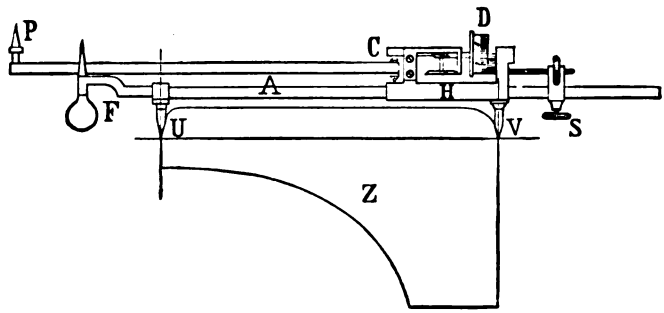

FIG. 11.—METHOD OF SETTING THE PLANIMETER FOR FINDING THE MEAN ORDINATE.

expressed in the same units as the subdivisions of the record-wheel; thus if the subdivisions of this wheel are fortieths of one inch, the result will be the length of the mean ordinate in fortieths. This distance, which we term the scale of the record-wheel, is not the distance between the marks on the graduated scale, but is the corresponding distance on the edge of the wheel which comes in contact with the paper.

The scale of the record-wheel evidently corresponds to a linear distance, and it should be obtained by measurement or computation. It is evidently equal to the number of divisions in the circumference divided by πd, in which d is the diameter, or it can be obtained by measuring a rectangular diagram with a length equal to l, and a mean ordinate equal to one inch, in which case the reading of the record-wheel will give the number of divisions per inch. A diameter of 0.795 inch, which corresponds to a radius of one centimeter, with a hundred sub-

divisions of the circumference, corresponds almost exactly to a scale of forty subdivisions to the inch, and is the dimension usually adopted on foreign-made instruments.

30. The Suspended Planimeter.—In the Amsler suspended planimeter as shown in Fig. 12, pure rolling motion without slipping is assumed to take place. The motion of the record-wheel, not clearly shown in the figure, is produced by the rotation of the cylinder *c* in contact with the spherical

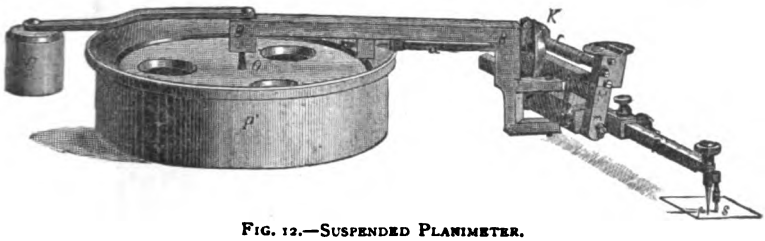

FIG. 12.—SUSPENDED PLANIMETER.

segment *K*. The rotation of the segment is due to angular motion around the pole *O*, that of the cylinder *c* to its position with reference to the axis of the segment. This position depends on the angle that the tracing arm, *ks*, makes with the radial arm, *BB*. The area in each case being, as with the polar planimeter, equal to the product of the length of tracing arm from pivot to tracing point multiplied by a constant factor.

31. The Coffin Planimeter and Averaging Instrument.—This instrument is shown in Fig. 13, from which it is seen that it consists of an arm supporting a record-wheel whose axis is parallel to the line joining the extremities of the arm. This instrument was invented by the late John Coffin, of Johnstown, in 1874. The record-wheel travels over a special surface; one end of the arm travels in a slide, the other end passes around the diagram.

32. Theory of the Coffin Instrument.—This planimeter may be considered a special form of the Amsler, in which the point *P*, see Fig. 14, page 43, moves in a right line instead of

swinging in an arc of a circle, and the angle CPT, corresponding to B in eq. (1), is a fixed right angle. The differential equation for area therefore is

$$dA = lnd\theta, \quad . \quad . \quad . \quad . \quad . \quad . \quad . \quad . \quad (11)$$

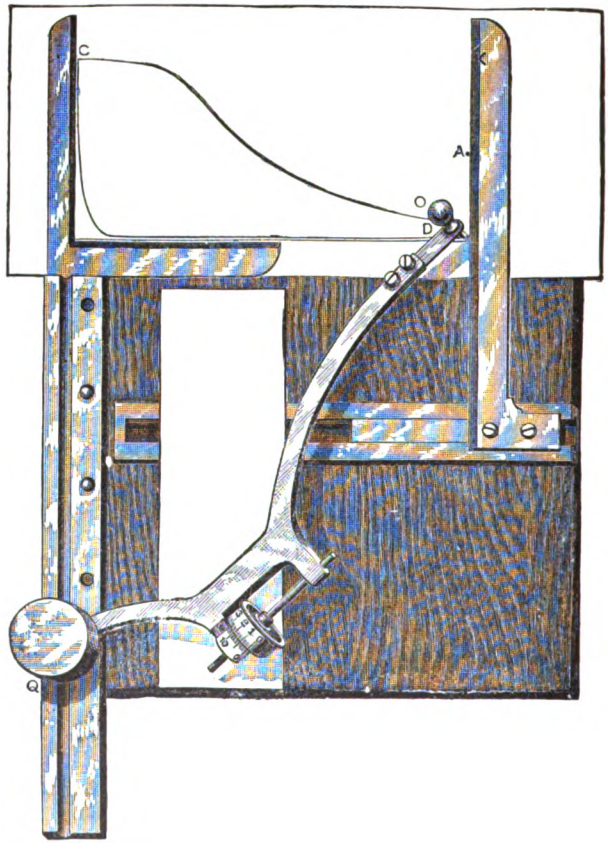

FIG. 13.—THE COFFIN AVERAGING INSTRUMENT.

and the differential equation of the register becomes

$$dR = nd\theta. \quad . \quad . \quad . \quad . \quad . \quad . \quad . \quad . \quad 12)$$

Hence, as in equation (7),

$$A = lR. \quad . \quad . \quad . \quad . \quad . \quad . \quad . \quad . \quad (13)$$

That is, the area is equal to the space registered by the record-wheel multiplied by the length of the planimeter arm.

This instrument may be made to give a line equivalent to the mean ordinate (M. O.) by placing the diagram so that

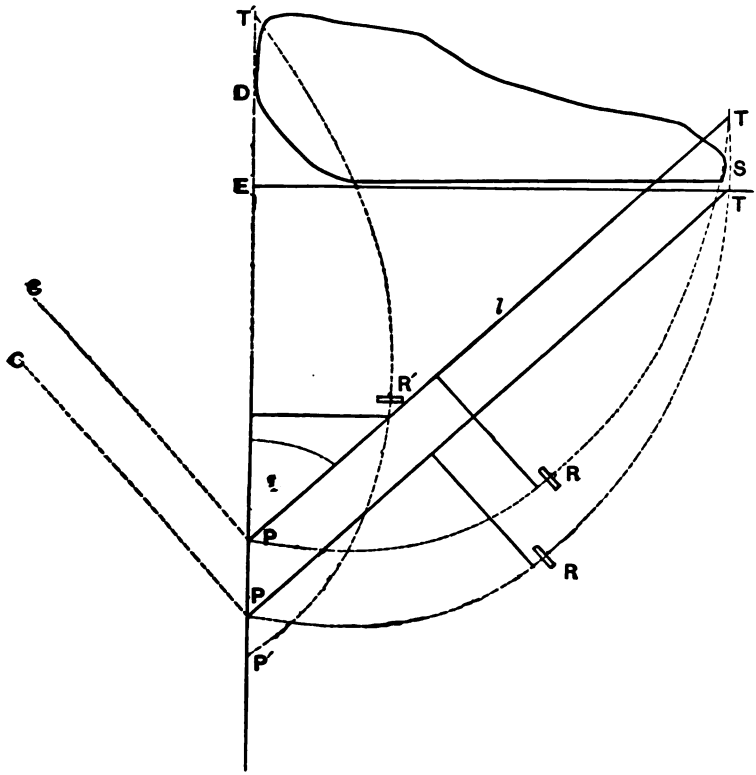

FIG. 14.—COFFIN AVERAGING INSTRUMENT.

one edge is in line with the guide for the arm; starting at the farthest portion of the diagram, run the tracing-point around in the usual manner to the point of starting, after which run the tracing-point perpendicular to the base along a special guide provided for that purpose until the record-wheel reads as at the beginning. This latter distance is the mean ordinate.

To prove, take as in Art. 29 the M. O. $= p$, the length of diagram $= L$, the perpendicular distance $= S$. Then

$$A = pL = lR. \quad . \quad . \quad . \quad . \quad . \quad . \quad . \quad (14)$$

Let C be the angle, EPT, that the arm makes with the guide, Fig. 8. In moving over a vertical line this angle will remain constant, and the record will be

$$R = S \sin C. \quad . \quad . \quad . \quad . \quad . \quad . \quad . \quad (15)$$

For the position at the end of the diagram

$$\sin C = L \div l;$$

therefore

$$R = SL \div l.$$

Substituting this in equation (14),

$$pL = lR = lSL \div l = SL.$$

Hence $p = S$ (15a), which was to be proved.

From the above discussion it is evident that areas will be measured accurately in all positions, but that to get the M. O. the base of the diagram must be placed perpendicular to the guide, and with one end in line of the guide produced.

It is also to be noticed that the record-wheel may be placed in any position with reference to the arm, but that it must have its axis parallel to it, and that it registers only the perpendicular distance moved by the arm.

33. The Willis Planimeter. — This planimeter is of the same general type as the Amsler Polar, but in place of the record-wheel for recording-arm it employs a disk or sharp-edged wheel free to slide on an axis perpendicular to the tracing-arm. The distance moved perpendicular to this arm is read on the graduated

edge of a triangular scale which is supported in an ingenious manner, as shown in the accompanying figure. The planimeter-arm can be adjusted as in the Amsler Planimeter so as to read the M. E. P. direct. An adjustable pin, *E*, is employed for the purpose of setting off the length of the diagram.

The mathematical demonstration is exactly as for the Amsler Planimeter, but in this case it is evident that the perpendicular distance which is registered on the scale is independent of the

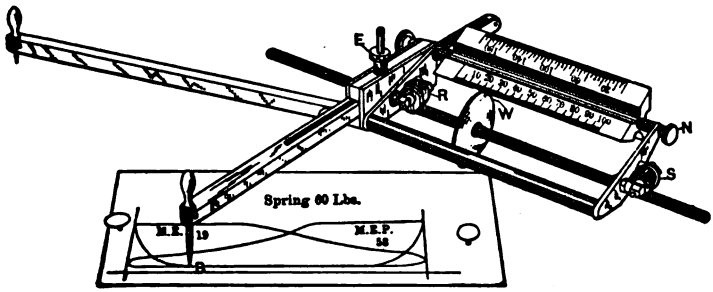

FIG. 14*a*.—THE WILLIS PLANIMETER.

circumference of the wheel. The only conditions of accuracy are, that the axis of the scale shall be at right angles to the arm of the planimeter, and that its graduations shall be equal to the area to be measured divided by the length of the arm.

34. The Roller-planimeter.—This is the most accurate of the instruments for integrating plane areas, and is capable of measuring the area of a surface of indefinite length and of limited breadth. This instrument was designed by Herr Corradi of Zurich, and is manufactured in this country by Fauth & Company of Washington, D. C.

A view of the instrument is shown in Fig. 15. The features of this instrument are: firstly, the unit of the vernier is so small that surfaces of quite diminutive size may be determined with accuracy; secondly, the space that can be encompassed by one fixing of the instrument is very large; thirdly, the

results need not be affected by the surface of the paper on which the diagram is drawn; and, fourthly, the arrangement of its working parts admit of being kept in good order a long time.

The frame B is supported by the shaft of the two rollers R_1R_1, the surfaces of which are fluted. To the frame B are fitted the disk A, and the axis of the tracing-arm F. The whole apparatus is moved in a straight line to any desired length upon the two rollers resting on the paper, while the tracing-point travels around the diagram to be integrated. Upon the shaft that forms the axis of the two rollers R_1R_1 a minutely

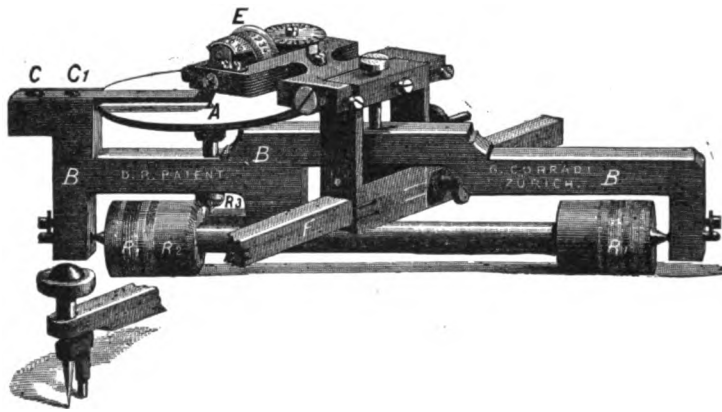

FIG. 15.—ROLLER-PLANIMETER.

divided mitre-wheel R_2 is fixed, which gears into a pinion R_3. This pinion, being fixed upon the same spindle as the disk A, causes the disk to revolve, and thereby induces the rolling motion of the entire apparatus.

The measuring-roller E, resting upon the disk A, travels thereon to and fro, in sympathy with the motion of the tracing-arm F, this measuring-roller being actuated by another arm fixed at right angles to the tracing-arm and moving freely between pivots. The axis of the measuring-roller is parallel to the tracing-arm F. The top end of the spindle upon which

the disk A is fixed pivots on a radial steel bar CC_1, fixed upon the frame B.

35. Theory.—The following theory of the roller-planimeter is partly translated from an article by F. H. Reitz, in the *Zeitschrift für Vermessungs-Wesen*, 1884.

According to the general theory of planimeters furnished with measuring-rollers, it is immaterial what line the free end of the tracing-arm travels over; nevertheless there is some practical advantage in the construction of the apparatus to be obtained from causing that end to travel as nearly as possible in a straight line. Still it is obvious that a slight deviation from the straight line would not involve any inaccuracy in the result.

Seeing that the fulcrum of the tracing-arm keeps travelling in a straight line, it appears advisable, in evolving the theory of the apparatus, to assume a rectangular system of co-ordinates, and fix upon the line along which that fulcrum travels as the axis of abscissæ.

The passage of the tracing-point around the perimeter of a diagram may be looked upon as being made up of two motions —one parallel to the axis of abscissæ and the other at right angles to that axis. Inasmuch as the latter of these two motions, in the direction of the axis of ordinates, is after all but an alternate motion of the tracing-point which takes place in an equal ratio until the tracing-point has returned to its starting-point, no one point of the circumference of the measuring-roller is continuously moved forward in consequence of this motion. Therefore it is only necessary to take the differential motion of the tracing-point in the direction of the axis of abscissæ into consideration.

In Fig. 16 the same letters of reference denote identical parts or organs as in Fig. 15 and the position of the parts in the two figures correspond exactly, the letter D denoting the distance between the fulcrum of the tracing-arm and the axis of the disk A. The amount of motion of a point on the record-wheel E, while the tracing-point travels to the extent of dx, must be determined. If the construction of the planimeter is

correct, this quantity must be the product of a constant derived from the instrument, multiplied by the differential expression for the surface. This latter quantity with reference to rectangular co-ordinates is ydx.

It is readily seen that as the tracing-point moves an amount equal to dx, a point in the circumference of the rollers R_1R_1 must be shifted the same amount, since the axes of these rollers are parallel to the ordinate y.

Any point in the pitch-line of the mitre-wheel R_2 must move an amount equal to $\frac{R_2}{R_1}dx$.

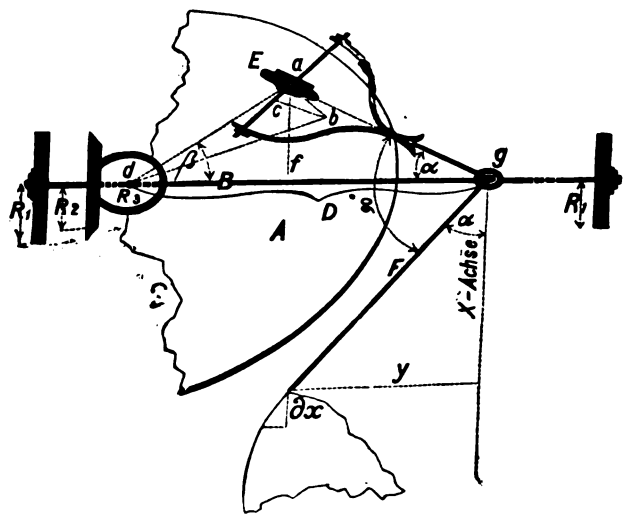

FIG. 16.

Suppose that while the tracing-point moves a distance dx, the disk A moves a distance ab, Fig. 10, since this disk is turned by the mitre-wheel whose pitch-circle is R_2, and ad is the distance from record-wheel to the axis of this wheel, we must have

$$ab = \frac{R_2}{R_1} \cdot \frac{ad}{R_2} dx. \quad \ldots\ldots \quad (16)$$

Because of the position of the axis of the record-wheel E, the motion of the disk A to the extent of ab produces a shifting of a point in the circumference of E equal to cb, while the record-wheel slips a distance ac. The distance cb is the reading of the record-wheel and is the quantity required. We have $dab = 90°$, $cag = 90°$; hence $caf = \alpha$, and $fab = \beta$, and $cab = \alpha + \beta$. So that since $acb = 90°$,

$$cb = ab \sin(\alpha + \beta) = ab(\sin\alpha\cos\beta + \cos\alpha\sin\beta). \quad (17)$$

But it is seen that

$$\sin\alpha = \frac{y}{F}.$$

Hence

$$\cos\alpha = \sqrt{1 - \frac{y^2}{F^2}};$$

$$\sin\beta = \frac{af}{ad} = ag\frac{\sin\alpha}{ad} = \frac{agy}{Fad};$$

$$\cos\beta = \frac{df}{ad} = \frac{D - ag\sqrt{1 - \frac{y^2}{F^2}}}{ad}.$$

Substitute these values in equation (17):

$$cb = ab\frac{y}{F}\left[\left(\frac{D - ag\sqrt{1 - \frac{y^2}{F^2}}}{ad}\right) + \sqrt{1 - \frac{y^2}{F^2}}\left(\frac{ag}{ad}\right)\right] = ab\frac{yD}{Fad}. \quad (18)$$

Substitute the value of ab in (16),

$$cb = \frac{R_2 Dy}{R_1 R_2 F}dx = (\text{constant})\, ydx, \quad (19)$$

which was to be proved.

The differential distance cb is the reading of the record-wheel, let this be represented by dr, denote by C the constant $\frac{DR_2}{FR_1R}$: then

$$dr = Cydx; \qquad ydx = \frac{dr}{C}; \qquad \int ydx = \frac{1}{C}\int_{r_0}^{r_1} dr.$$

This expression integrated gives

$$\text{Area} = \frac{1}{C}(r_1 - r_0) = \frac{FR_1R_2}{DR_2}(r_1 - r_0); \quad . \quad . \quad (20)$$

in which r_1 and r_0 are the initial and final readings of the record-wheel.

In the construction of the instrument R_1, R_2, D, and R_2 are fixed quantities, but the length of the tracing-arm F can be varied, with a corresponding variation in the unit of measurement.

36. Care and Adjustment of Planimeters.—From the preceding discussion it is seen that the area in every case is the product of the distance actually moved by the circumference of the record-wheel into the length of the arm from the tracing-point to the pivot, into a constant which may be and is, in the polar planimeter, equal to one. It is also to be noticed that the record-wheel is so arranged as to register the distance moved by a point in a direction perpendicular to that of the tracing-arm, and that for other directions it slips. This indicates that any change whatever in the diameter of the record-wheel or gear-wheels, due to wear or dirt, will require a corresponding change in the length of tracing-arm; and further, any irregularities in the edge of this wheel will make the relative amounts of slipping and rolling motion uncertain, and consequently impair its accuracy.

Again, the plane of the record-wheel must be perpendicular to the tracing-arm, otherwise an error will result.

In the planimeter the moving parts usually have pivot-

bearings which can be loosened or tightened as required. The revolving parts should spin around easily but at the same time accurately, and the various arms should swing easily and show no lost motion. The pitch-line of the record-wheel should be as close as possible to the vernier, but yet must not touch it; the counting-wheel must work smoothly, but in no way interfere with the motion of the record-wheel.

37. **Directions for Use.**—1. Oil occasionally with a few drops of watch or nut oil.

2. Keep the rim of the record-wheel clean and free from rust. Wipe with a soft rag if it is touched with the fingers.

3. Prepare a smooth level surface, and cover it with heavy drawing-paper, for the record-wheel to move over. Stretch the diagram to be evaluated smooth.

4. Handle the instrument with the greatest care, as the least injury may ruin it. Select a pole-point so that the instrument will in its initial position have the tracing-arm perpendicular either to the pole-arm or to the axis of the fluted rollers, as the case may be; for in this position only is the error neutralized, which arises from the fact that the tracer is not returned to its exact starting-point. Then marking some starting-point, trace the outline of the area to be measured in the direction of the hands of a watch, slowly and carefully, noting the reading of the record-wheel at the instant of starting and stopping. It is generally more accurate to note the initial reading of the record-wheel than to try and set it at zero.

5. *Special Directions.*—To obtain the mean ordinate with the polar planimeter, make the length of the adjustable arm equal to the length of the diagram, as explained in Art. 28, page 38, and follow directions for use as before.

6. In *using the Coffin planimeter*, the grooved metal plate *I* is first attached to the board, upon which the apparatus is mounted as shown in the cut, page 42, being held in place by a thumb-screw applied to the back side.

The diagram will be held securely in place by the spring-clips adjacent, *A* and *C*, Fig. 13. The area may be found by running the tracing-point around the diagram, as described for the

polar planimeter, for any position within the limits of the arm. The mean ordinate may be found by locating the diagram as shown in the cut, with one extreme point in the line of the metal groove produced, and the dimension representing the length of the diagram perpendicular to this groove. Start to trace the area at the farthest distance of the diagram from the metal guide produced, as shown in Fig. 13; pass around in the direction of the motion of the hands of a watch to the point of beginning; then carry the tracing-point along the straight-edge, AK, which is parallel to the metal groove, until the record-wheel shows the same reading as at the instant of starting: this latter distance is the length of the mean ordinate.

38. Calibration of the Planimeter.—In order to ascertain whether the instrument is accurate and graduated correctly, it is necessary to resort to actual tests to determine the character and amount of error.

It is necessary to ascertain: 1. If the same readings are given by different portions of the record-wheel. 2. Whether the position of the vernier is correct, and agrees with the constants tabulated or marked on the tracing-arm. 3. Whether the scale of the record-wheel is correct, and agrees with the constants marked on the tracing-arm.

These tests are all made by comparing the readings of the instrument with a definite and known area. To obtain a definite area, a small brass or German-silver rule, shown at L, Fig. 11, is used; this rule has a small needle-point near one end, and a series of small holes at exact distances of one inch or one centimeter from the needle-point. To use the rule the needle-point is fixed on a smooth surface covered with paper, the planimeter is set with its tracing-point in one of the holes of the rule, and the pole-point fixed as required for actual use. With the tracing-point in the rule describe a circle, as shown by the dotted lines (Fig. 17) around the needle-point as a centre. Since the radius of this circle is known, its area is known; and as the tracing-point of the planimeter is guided in the circumference, the reading of the record-wheel should give the correct area.

The method of testing is illustrated in Figs. 17, 18, 19, and 20. Figs. 17 and 18 show the method with reference to the polar planimeter; Figs. 19 and 20 show the corresponding methods of testing the rolling-planimeter. In Figs. 17 and 19 *P* is the position of the pole, *B* the pole-arm, and *A* the tracing-arm. In Figs. 18 and 20 *B* is the axis of the rollers and *A* is the tracing-arm.

First Test. This operation, see Figs. 17 and 18, consists in locating the planimeters as shown, and then slowly and

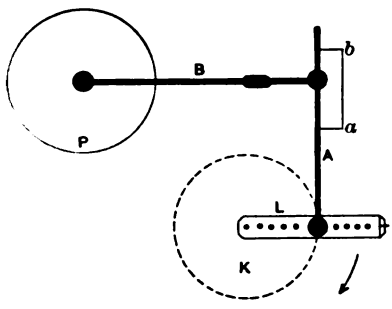

FIG. 17.

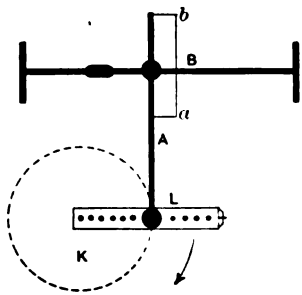

FIG. 18.

carefully revolving so as to swing the check-rule as shown by the arrow. Take readings of the vernier at initial point, and again on returning to the starting-point: the difference of these readings should give the area. Repeat this operation several times.

The instrument is now placed in the position shown in Figs. 19 and 20 when the circle *K* appears on the *right*-hand side of the tracing-arm *A*, and the passage of the tracer takes place in exactly the same way.

If the results obtained right and left of the tracing-arm be equal to one another, it is clear that the axis *ab* of the measuring-wheel is parallel to the tracing-arm, and, this being so, the second test may now be applied. But if the result be *greater* in the first case, that is to say, when the circle lies to the left

of the tracing-arm, the extremity *a* of the axis of the measuring-wheel must be further removed from the tracing-arm; if it be *less*, that extremity must be brought nearer to the tracing-arm.

Second Test. The tracing-arm is adjusted by means of the vernier on the guide and by means of the micrometer-screw, in accordance with the formulæ for different areas; it then is fixed within the guide by means of the binding-screw. The circumference of circles of various sizes are then travelled over

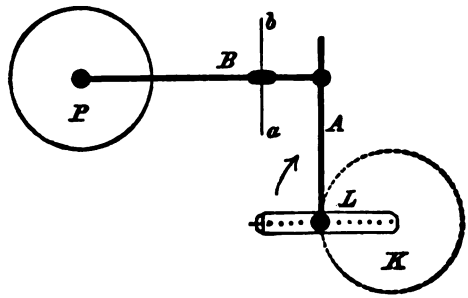

FIG. 19.

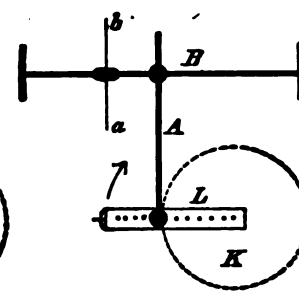

FIG. 20.

with the check-rule, and the results thus obtained are multiplied into the unit of the vernier corresponding to the area given for that particular adjustment by the formula. The figures thus obtained ought to be equal to the calculated area of the circles included by the circumferences. If the results obtained with the planimeter fall short of the calculated areas to the extent of $\frac{1}{n}$ of those areas, the length of the tracing-arm, that is to say, the distance between the tracer and the fulcrum of the tracing-arm, must be reduced to the extent of $\frac{1}{n}$ of that length; in the opposite case it must be increased in the same proportion. The vernier on the guide-piece of the tracing-arm shows the length thus defined with sufficient accuracy, usually

in half-millimeters, or about fiftieths of an inch, on the gauged portion of the arm.

In order to test the accuracy of the readings according to the two methods just described, some prefer the use of a check-plate in lieu of the check-rule. The check-plate is a circular brass disk upon which are engraved circles with known radii.

It is advisable to apply the second test also to a large diagram drawn on paper and having a known area.

The instrument having been found correct or its errors determined, it may now be used with confidence.

The following form is used to record the results of the test:

Calibration of.....Planimeter. .....189..
by .....Dia. register-wheel, in....
Formula of Instrument..... Length of arms, pole to pivot, in....
Pivot to register-wheel, in.... Pivot to tracing-point, in....
In Roller Pla. radius roller, in.... Pitch radius Gears, No. I....No. II.....

COMPARISON WITH STANDARD.

	Area.			Mean Ordinate.		
No.	Inst. Reading. o	Difference from Mean. ϵ	ϵ^2	Inst. Reading. o	Difference from Mean. ϵ	ϵ^2
Mean						

Mean error of one observation, $\pm \sqrt{\Sigma\epsilon^2 + (n-1)}$ in area...., in ordinate...in.
Mean error of result, $\pm \sqrt{\Sigma\epsilon^2 + n(n-1)}$ in area..., in ordinate...in.
Probable error of one obs., $\pm 0.67 \sqrt{\Sigma\epsilon^2 + (n-1)}$ in area...., in ordinate...in.
Probable error of result, $\pm 0.67 \sqrt{\Sigma\epsilon^2 + n(n-1)}$ in area...., in ordinate...in.

39. Errors of Different Planimeters.—Professor Lorber, of the Royal Mining Academy of Loeben, in Austria, made

extensive experiments on various planimeters, with the results shown in the following table:

Area in—		The error in one passage of the tracer amounts on an average to the following fraction of the area measured by—				
		The ordinary Polar Planimeter Unit of Vernier: 10 sq. mm. = .015 sq. in.	Stark's Linear Planimeter Unit of Vernier: 1 sq. mm. = .015 sq. in.	Suspended Planimeter Unit of Vernier: 1 sq. mm. = .0015 sq. in.	Rolling Planimeter—	
Square cm.	Square inches.				Unit of Vernier: 1 sq. mm. = .0015 sq. in.	Unit of Vernier: .1 sq. mm. = .0001 sq. in.
10	1.55	$\frac{1}{75}$	$\frac{1}{588}$	$\frac{1}{625}$	$\frac{1}{625}$	$\frac{1}{1000}$
20	3.10	$\frac{1}{148}$	$\frac{1}{1000}$	$\frac{1}{1111}$	$\frac{1}{1000}$	$\frac{1}{2000}$
50	7.75	$\frac{1}{355}$	$\frac{1}{1852}$	$\frac{1}{2500}$	$\frac{1}{2000}$	$\frac{1}{3000}$
100	15.50	$\frac{1}{682}$	$\frac{1}{2857}$	$\frac{1}{4167}$	$\frac{1}{3333}$	$\frac{1}{5000}$
200	31.00	$\frac{1}{1374}$	$\frac{1}{4255}$	$\frac{1}{7143}$	$\frac{1}{5128}$	$\frac{1}{7693}$
300	46.50	....	....	$\frac{1}{9375}$	$\frac{1}{8000}$	$\frac{1}{10000}$

The absolute amount of error increases much less than the size of the area to be measured, and with the ordinary polar planimeter is nearly a constant amount.

The following table is deduced from the foregoing, and shows the error per single revolution in square inches:

Area in—		Error in one passage of the tracer in square inches—			
		Polar Planimeter Unit of Vernier: 10 sq. mm. = .015 sq. inches.	Suspended Planimeter Unit of Vernier: 1 sq. mm. = .0015 sq. inches.	Rolling Planimeter—	
Square cm.	Square inches.			Unit of Vernier: 1 sq. mm. = .0015 sq. inches.	Unit of Vernier: .1 sq. mm. = .0001 sq. inches.
10	1.55	0.0207	0.0025	0.0025	0.00155
20	3.10	0.0206	0.0028	0.0031	0.00158
50	7.75	0.0221	0.0031	0.0038	0.00258
100	15.50	0.0227	0.0035	0.0043	0.00310
200	31.00	0.0243	0.0043	0.0060	0.00403
300	46.50	.....	0.0049	0.0058	0.00465

These errors were expressed in the form of equations, as follows, by Professor Lorber. Let f equal the area corre-

sponding to one complete revolution of the record-wheel; let dF be the error in area due to use of the planimeter. Then for the different planimeters we have the following equations:

Lineal planimeter,	$dF = 0.00081f + 0.00087\sqrt{Ff}$;
Polar planimeter,	$dF = 0.00126f + 0.00022\sqrt{Ff}$;
Precision polar planimeter,	$dF = 0.00069f + 0.00018\sqrt{Ff}$;
Suspended planimeter,	$dF = 0.0006f + 0.00026\sqrt{Ff}$;
Rolling planimeter,	$dF = 0.0009f + 0.0006\sqrt{Ff}$.

40. **Moment Planimeters** much more complicated than those described have been made for special purposes, of which we may mention Amsler's mechanical integrator for finding the moment of inertia, and "Coradi's" mechanical integraph for drawing the derivity of any curve, the principal curve being known, thus giving a graphic representation of moment.

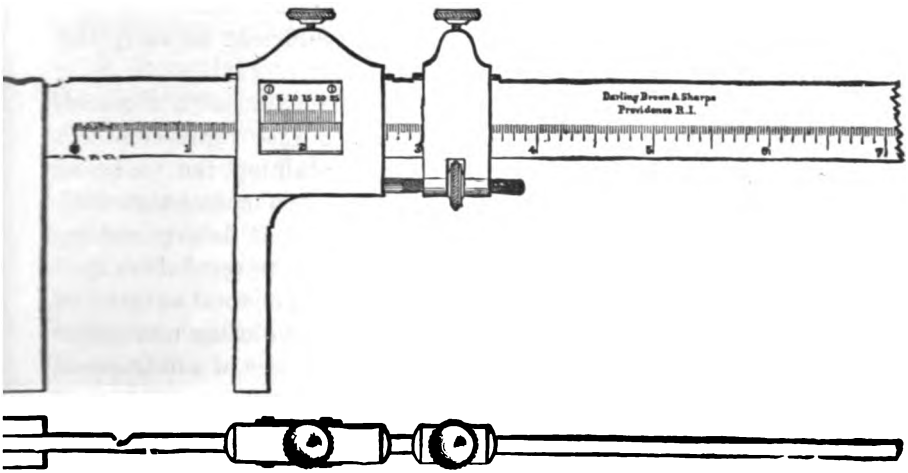

Fig. 21.—Vernier Caliper.

40. **Vernier Caliper.**—This instrument consists of a sliding-jaw, which carries a vernier, and may be moved over a fixed scale. The form shown in Fig. 21 gives readings to $\frac{1}{10}$ inch on the scale, and $\frac{1}{10}$ this amount or to one-thousandth of

an inch on the vernier. The reading of the vernier as it is shown in the figure is 1.650 from the scale, and 0.002 on the vernier, making the total reading 1.652 inches. This instrument is useful for accurate measurements of great variety; the especial form shown in the cut has a heavy base, so that it will stand in a vertical position and may be used as a height-gauge. To use it as a caliper, the specimen to be measured is placed between the sliding-jaw and the base; the reading of the vernier will give the required diameter.

41. **The Micrometer.**—This instrument is used to measure small subdivisions. It consists of a finely cut screw, one revolution of which will advance the point an amount equal to the pitch of the screw. The screw is provided with a graduated head, so that it can be turned a very small and definite portion of a revolution. Thus a screw with forty threads to the inch will advance for one complete revolution $\frac{1}{40}$ of an inch, or 25 thousandths. If this be provided with a head subdivided to 250 parts, the point would be advanced one ten-thousandth of an inch by the motion sufficient to carry the head past one subdivision.

The micrometer is often used in connection with a microscope having cross-hairs, and in such a case represents the most accurate instrument known for obtaining the value of minute subdivisions; it is also often used in connection with the vernier. The value of the least reading is determined by ascertaining the advance due to one complete revolution, and dividing by the number of subdivisions. The total advance of the screw is equal to the advance for one revolution multiplied by the number of revolutions plus the number of subdivisions multiplied by the corresponding advance for each.

The accuracy of the micrometer depends entirely on the screw which is used.

Accuracy of Micrometer-screws.—The accuracy attained in cutting screws is discussed at length by Prof. Rogers in Vol. V. of Transactions of American Society of Mechanical Engineers, from which it is seen that while no screw is perfectly accurate, still great accuracy is attained. The following errors are those

in one of the best screws in the United States, expressed in hundred-thousandths of an inch, for each half-inch space, reckoned from one end.

CORNELL UNIVERSITY SCREW.

TOTAL ERRORS IN HUNDRED-THOUSANDTHS OF AN INCH.

No. of Space.	Total Error.	No. of Space.	Total Error.	No. of Space.	Total Error.
0	0	12	− 4	24	− 8
1	+ 6	13	− 7	25	− 7
2	+ 8	14	− 9	26	− 7
3	+ 9	15	− 7	27	− 9
4	+ 7	16	− 10	28	− 9
5	+ 9	17	− 11	29	− 7
6	+ 7	18	− 11	30	− 7
7	+ 4	19	− 10	31	− 6
8	+ 5	20	− 10	32	− 7
9	0	21	− 9	33	− 7
10	− 1	22	− 11	34	− 3
11	− 2	23	− 10	35	− 2
				36	0

A recent investigation made by the author of the errors in the ordinary Brown and Sharpe micrometer-screw, failed to detect any errors except those of observation, which were found to be about 4 hundred-thousandths of an inch for a distance equal to three-fourths its length. The errors in the remaining portion of the screw were greater; the total error in the whole screw being 12 hundred-thousandths of an inch. As the least reading was one ten-thousandth, the screw was in error but slightly in excess of the value of its least subdivision. In another screw of the same make the error was three times that of the one described.

42. Micrometer Caliper consists of a micrometer-screw shown in Fig. 22, which may be rotated through a fixed nut. To the screw is attached an external part or *thimble*, which has a graduated edge subdivided into 25 parts. The fixed nut is prolonged and carries a cylinder, termed the *barrel*, on which are cut concentric circles, corresponding to a scale of equal parts, and a series of parallel lines, which form a vernier with refer-

ence to the scale on the thimble, the least reading of which is one tenth that on the thimble. If the screw be cut 40 threads per inch, one revolution will advance the point 0.025 inch; and if the thimble carry 25 subdivisions, the least reading past any fixed mark on the barrel would be one thousandth of an inch.

By means of the vernier the advance of the point can be read to ten-thousandths of an inch. Thus in the sketches of

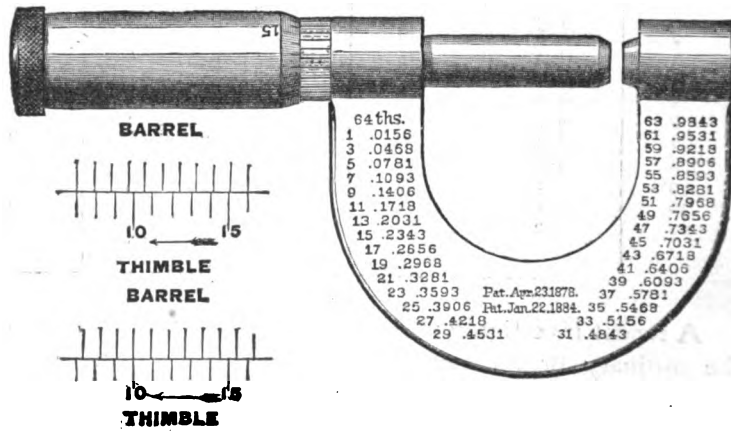

FIG. 22.—MICROMETER CALIPER.

the barrel and thimble scales in Fig. 16 the zero of the vernier coincides in the upper sketch with No. 7 on the thimble; but in the lower figure the zero of the vernier has passed beyond 7, and by looking on the vernier we see that the 3d mark coincides with one on the thimble, so that the total reading is 0.007 + 0.0003, which equals 0.0073 inch.

This number must be added to the scale-reading cut on the barrel to show the complete reading. The principal use of the instrument is for measuring external diameters less than the travel of the micrometer-screw.

The Sweet Measuring-machine.—The Sweet measuring-machine is a micrometer caliper, arranged for measuring larger diameters than the one previously described. The general

form of the instrument is shown in Fig. 23. The micrometer-screw has a limited range of motion, but the instrument is furnished with an adjustable tail spindle, which is set at each

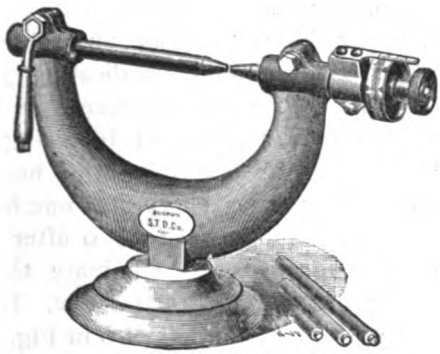

FIG. 23.—SWEET'S MEASURING-MACHINE.

observation for distances in even inches, and the micrometer-screw is used only to measure the fractional or decimal parts of an inch. The instrument is furnished with an external

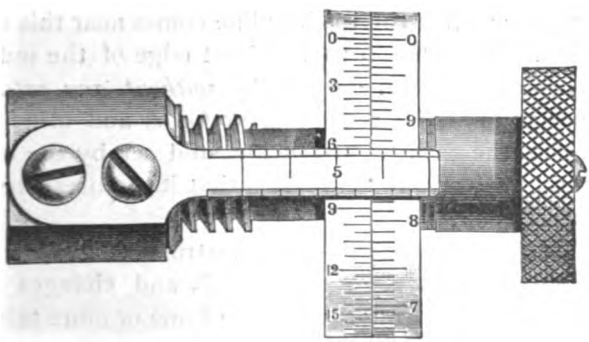

FIG. 24.

scale, graduated on the upper edge to read in binary fractions of an inch, and on the lower edge to read in decimals of an inch; this scale can be set at a slight angle with the axis to correct for any error in the pitch of the micrometer-screw.

The graduated disk is doubly graduated; the right-hand graduations corresponding to those on the lower side of the scale. The scale and graduated disk is shown in Fig. 24, and the readings corresponding to the positions shown in the figure are 0.6822, the last-number being estimated.

The back or upper side of the scale, and the left-hand disk, are for binary fractions, the figures indicating 32ds. Fig. 25 shows the arrangement of the figures. Beginning at 0 and following the line of chords to the right, the numbers are in regular order, every fifth one being counted, and coming back to 0 after five circuits. This is done to eliminate the factor five from the ten-thread screw. In Fig. 24 the portion to the left of 0 in Fig. 25 is seen.

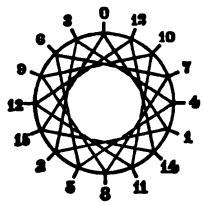

FIG. 25.

The back side of the index-bar is divided only to 16ths, the odd 32ds being easily estimated, as this scale is simply used for a "finder;" thus: In the figure the reading line is very near the $\frac{11}{16}$ mark, or *six* 32ds beyond the half-inch. This shows that 6 is the significant figure upon this thread of the screw. The other figures belong to other threads. The figure 6 is brought to view when the reading line comes near this division of the scale. Bring the 6 to the front edge of the index-bar, and the measurement is exactly $\frac{11}{16}$ *without any calculation.* Thus every 32d may be read, and for 64ths and other binary fractions take the nearest 32d below and set by the intermediate divisions, always remembering that it requires *five* spaces to count *one.*

43. **The Cathetometer.**—This instrument is used extensively to measure differences of levels and changes from a horizontal line. Primarily it consists of one or more telescopes sliding over a vertical scale, with means for clamping the telescope in various positions and of reading minute distances. The one shown in the engraving (Fig. 26) consists of a solid brass tripod or base supporting a standard of the same metal, the cross-section of which is shown at different points by the small figures on the left. A sliding-carriage upon which is

secured the small levelling instrument, and whic has also a vernier scale as shown, is balanced by heavy lead weights, sus-

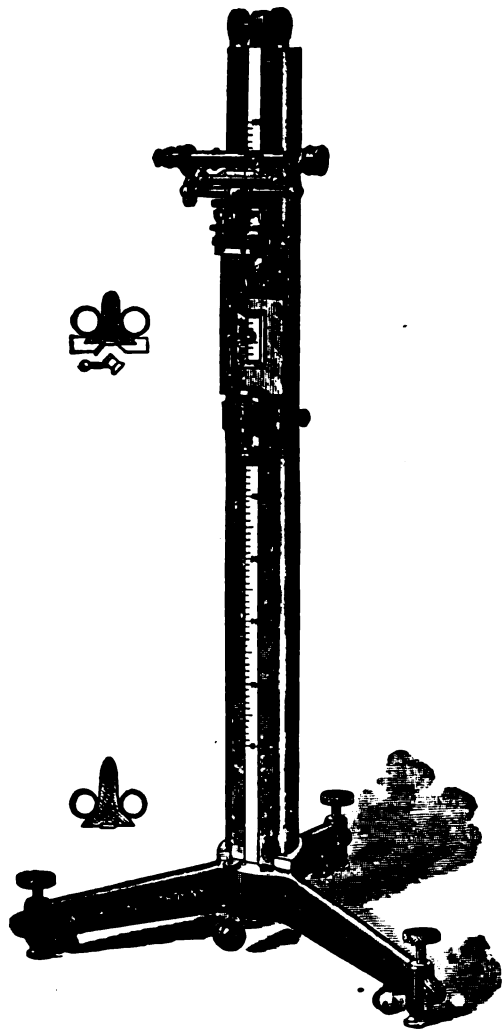

FIG. 26.—THE CATHETOMETER.

pended within the brass tubes on either side by cords attached to the upper end of the carriage, and passing over the pulleys

shown at the top of the column. The column is made vertical by reference to the attached plumb-line.

The movable clamping-piece below the carriage is fixed at any point required, by the screw, shown at its side, after which the telescope can be raised or lowered by rotating the micrometer-screw attached to the clamp. The telescope is provided with cross-hairs, which can be adjusted by reversing in the wyes and turning 180 degrees in azimuth. The vertical scale is provided with vernier and reading-microscope.

Aids to Computation.—Graphical methods for multiplying or dividing are usually given in treatises on geometry and are often sufficiently accurate for the required results. Tables of logarithms and of products often save much labor. The Rechentafeln by A. L. Crelle of Berlin gives one million products and will be found of much value in multiplication and division. A very excellent logarithmic table has recently been issued by Prof. G. W. Jones, Ithaca, N. Y.

Computation Machines. — Several very excellent machines for multiplying and dividing are now made, which give accurate results to from 14 to 17 places. Of these we may mention, as moderate in price and of perfect accuracy, the calculating machine of George B. Grant of Boston; the Brunsvega by Grimme-Natlis & Co., Brunswick, Germany, and the Comptometer, made by the Comptometer Co. of Chicago. Slide-rules of compact form but with with scales 40 feet in length, as designed by Thatcher or Fuller, can also be obtained of the principal stationers.

The processes of arithmetical calculation are almost entirely mechanical and involve no reasoning powers, yet they are of utmost importance in connection with experimental work. Unless the observations of the experiment are correctly recorded and the necessary calculations for expressing the result made accurately, the experimental work will either be of no value, or, what is worse, positively misleading. For these reasons mechanical methods of computation, which involve at best small errors of known magnitude, are to be adopted whenever possible in reducing engineering experiments.

The calculating machine is of especial value, since if the mechanical processes are correctly performed the results will be given with accuracy for the number of places within limits of the machine. Numerous calculating machines have been designed, the most noted of which is the "difference engine" designed by Babbage in 1822 and on which the English Government expended more than $85,000 without bringing it to perfection. The first practical machine which accomplished anything worthy of permanent record was invented by Thomas de Colmar in 1850, and since that time numerous others, designed on similar lines, have appeared, of which should be mentioned those invented by Tate, Burkhardt, Grant, Baldwin, and Odhner. The Grant machine, developed from 1874 to 1896, has now reached a high degree of perfection, and its price is within the reach of any engineering laboratory. The Odhner or Brunsvega, referred to above, was shown at the World's Fair in 1893, and differs from the Grant principally in the arrangement of parts, in the fact that, as now sold, it possesses an index or counter to register the multiplier during the process of multiplication. The Grant machine will on special order be fitted with this appliance; its mechanism is much superior to that of the foreign instrument, and it is operated with less labor and noise.

In both machines, the result is read on a series of wheels arranged on the same axis and so connected that ten revolutions of one of lower denomination are required for one of the next higher, etc., these wheels being readily and simultaneously set at zero. The numbers to be united are engraved on a keyboard. By setting a lever opposite any number and turning a crank once, the sum will appear on the result-wheels; by turning the crank twice, the result-wheels will show twice the sum, etc. The number keyboard can be shifted several places, so that it is possible to multiply by numbers of any denomination, by less than ten revolutions of the crank. Subtraction is performed by starting with the larger number on the result-wheel and the smaller number on the keyboard and revolving the crank in the opposite direction from that required for addition.

Division is computed as a sort of continued subtraction, and is a complicated operation. The machine is readily worked as a difference engine, thus permitting its use for computing complicated tables.

A trial made in the U. S. Coast Survey of the relative rapidity and accuracy of the Grant calculating machine and a seven-place table of logarithms, in multiplying seven figures by seven figures and retaining seven figures in the result, showed the average time of multiplication with the machine as 56 seconds, and with logarithms 157 seconds; the number of errors in 100 trials, with the machine 7, with logarithms 12. A trial made at Sibley College showed more favorable for the machine, probably because the observers were not as expert with logarithms.

STRENGTH OF MATERIALS.

CHAPTERS III, IV, AND V.

CHAPTER III.

GENERAL FORMULÆ.

IN this chapter a statement is made of the principal formulæ required for the experimental work in "Strength of Materials." The full demonstration of these formulæ is to be found in "Mechanics of Engineering," by I. P. Church; "Strength of Materials," by D. V. Wood; "Materials of Construction," by R. H. Thurston: N. Y., J. Wiley & Sons.

44. Object of Experiments.—The object of experiments relating to the "Strength of Materials" is to ascertain, firstly, the resistance of various materials to strains of different character; secondly, the characteristics which distinguish the different qualities, i.e., the good from the bad; thirdly, experimental proof of the laws deduced theoretically; fourthly, general laws of variation, as dependent on form, material, or quality.

The following methods of testing are ordinarily employed: (1) by tension or pulling; (2) by compression; (3) by transverse loading; (4) by torsion; (5) by impact; (6) by repeated loading and unloading, or fatigue.

45. Definitions.—*Stress* is the distributed force applied to the material; it may be *internal* or *external.*

Stress is of two kinds, *normal* or *direct*, and *shearing* or *tangential*, the latter force acting at right angles to the first. A direct stress on an element is always accompanied by a shearing stress, which tends to move the particles at right

angles to the line of action of the force. This is well shown in the simple break by tension, in which case the particles are not only pulled apart, but they are moved laterally, since the break is accompanied with an elongation of the original specimen, and a corresponding reduction in area of the cross-section.

Strain is the distortion of the material due to the action of the force, and within the limits of elasticity is proportional to the stress.

Each stress produces a corresponding strain.

Elasticity is the property that most materials have of regaining their original form when the forces acting on them are removed. This property is possessed only to a limited extent, and if the *deformation* or *strain* exceeds a certain amount, the material will not regain its original form.

The critical condition beyond which the body cannot be strained without a permanent distortion or *set* is termed the *elastic limit;* this point is gradually reached in most materials, and is indicated by an increase in the increment of strain due to a constant increment of stress.

Rigidity or *stiffness* is the property by means of which bodies resist change of form.

The *coefficient* of *ultimate strength* is the number of pounds per square inch required for rupture, and is obtained by calculation from the known area and actual breaking-load. The *coefficient* of *strength* at the *elastic limit* is the number of pounds per unit of area acting upon the material when a failing in strength is shown by an increased increment of distortion for an equal increment of load.

The *resilience* is the potential energy stored in the body, and is the amount of work the material would do on being relieved from a state of stress. Within the elastic limit, it is the work done by the force acting on the body, and is evidently equal at any point to the product of one half the load, into the distortion of the piece, this latter being the space passed through. The *elongation* is the total relative strain; it is usually expressed in percentage of the full length, and is calculated for the point of rupture. In connection with

this should be measured the *reduction* of area of cross-section. The *modulus of elasticity* is the ratio of the stress per unit of area to the deformation per unit of length. The *modulus of rigidity* is the amount of tangential stress per unit of area, divided by the deformation it produces, expressed in angular or π measure. The *maximum load* is usually greater than the load at rupture.

The *safe load* must always be less than the load at the elastic limit, and is usually taken as a certain portion of the ultimate or breaking load. The ratio of the breaking-load to the safe load is termed a *factor of safety*.

The different kinds of stress, consequently the different kinds of strain produced, are: Longitudinal, divided into tension and compression; Transverse, into shearing and bending; and Twisting or Torsional.

46. Strain-diagrams are diagrams which show the relations which the increments of strain bear to the stress. If the strain-diagrams of several specimens be drawn on the same sheet, the relative values of stress and of strain at elastic limit and at breaking can be determined by inspection. Within the elastic limit the diagram will be a straight line.

Strain-diagrams are constructed (see Article 19, p. 20) by laying off the strain on the horizontal axis to a scale that is readily apparent to the eye, and the corresponding loads as ordinates to a convenient scale, as 3000 or 5000 pounds per inch: a curve drawn through the extremities of these various ordinates will be the strain-diagram. When no part is perfectly elastic, as in cast-iron or rubber, no portion of the curve will be straight.

The general form of the strain-diagram, as drawn autographically, is shown in Fig. 27. In this diagram the strain is represented by distances parallel to OX, the stress as a certain number of pounds per inch parallel to OY. For a short distance from O to A the diagram is a straight line, showing that the increments of strain and stress are uniform; at A there is a sudden increase in the strain, without a marked increase in load, shown by the curved line A to B. The point A is often spoken of as the *yield-point*. In most of the ductile materials

this sudden increase of strain is accompanied with an apparent reduction of stress, as shown by the curve from *B* to *C*. This reverse curvature is often well marked on curves taken automatically, and is probably due to the fact that the increase in

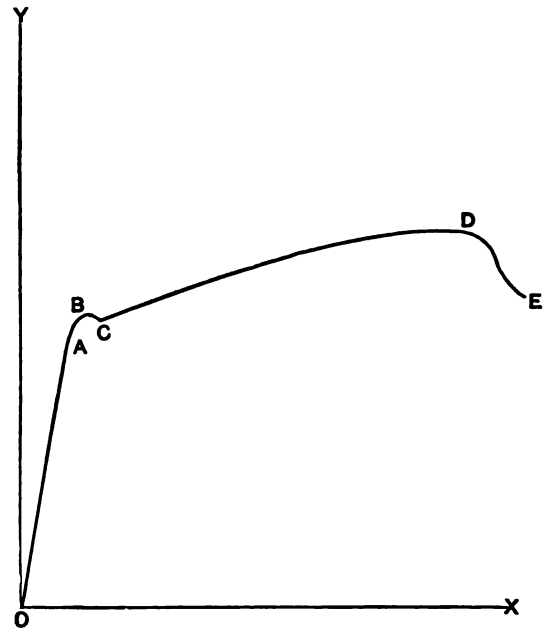

FIG. 27.—THE STRAIN-DIAGRAM.

strain is so great that the scale-beam of the machine falls until the stress is increased. The curve then continues to rise, reaching its maximum position at *D*, and falling soon after when the specimen breaks, as shown at *E*.

47. Viscosity or Plasticity.—This is the term applied to denote the change of form or flow that results from the application of stress for a long time. It is the result of internal molecular friction, and the resistance exerted is proportioned to the rapidity of the change. The definition of viscosity is given by Maxwell (see Theory of Heat) as follows: "The viscosity of a substance is measured by the tangential or shearing

force on the unit of area of either of two horizontal planes at the unit of distance apart, one of which is fixed, while the other moves with the unit of velocity, the space between being filled with the viscous substance."

Let the substance be in contact with one fixed plane and with one plane moving with the velocity v; denote the distance between the planes by c. Let F be the coefficient of shearing-force, or the force per unit of area tending to move the substance parallel to either plane. Let μ be the coefficient of viscosity.

Then we have

$$F = \mu \frac{v}{c}. \quad \ldots\ldots\ldots \quad (1)$$

If we let b = the breadth and a the length of the plane and R the total force acting,

$$R = abF.$$

Hence

$$\mu = \frac{cF}{v} = \frac{cR}{vab}.$$

When c, a, and b each equal unity,

$$\mu = R.$$

If R is the moving force that would generate a certain velocity v in the mass M in time t, R will equal $Mv \div t$; from which

$$\mu = \frac{Mvc}{tvab}; \quad \ldots\ldots\ldots \quad (1a)$$

all of which quantities may be determined by experiment.

48. Notation.—The notation used is the same as that in Church's "Mechanics of Engineering," and is as follows:

Quantity.	Symbol.			
	Maximum Load.	Breaking-Load.	Elastic Limit.	Safe Limit.
Load applied	P_m	P	P''	P'
Load per square inch	p_m	p	p''	p'
Moduli of tenacity	T_m	T	T''	T'
" " compression	C_m	C	C''	C'
" " shearing	S_m	S	S''	S'
Total elongation	λ_m	λ	λ''	λ'
Increment of elongation	$\Delta\lambda_m$	$\Delta\lambda$	$\Delta\lambda''$	$\Delta\lambda'$
Relative elongation	ϵ_m	ϵ	ϵ''	ϵ'
Resilience	U_m	U	U''	U'
Bending-moment	M_m	M	M''	M'
Relative shearing distortion		δ	δ''	δ'
Transverse load—total	W_m	W	W''	W'
Transverse shear	J_m	J	J''	J'

	Tension.	Compression.	Shearing.
Modulus of Elasticity	E_t	E_c	E_s

Area sq. inches ..... F
Length, " l
Factor of safety ..... n
Ordinary moment of inertia I
Polar moment of inertia ..... I_ϕ
Maximum fibre-distance ..... e

49. Formulæ for Tensile Strength. (Church's Mechanics, pp. 207–221.)—Since in tension the stress is uniformly distributed, we have

$$P = FT; \quad . \quad . \quad . \quad . \quad . \quad . \quad . \quad . \quad (2)$$

$$p = \frac{P}{F}; \quad . \quad . \quad . \quad . \quad . \quad . \quad . \quad . \quad (3)$$

$$\epsilon = \frac{\lambda}{l}. \quad . \quad . \quad . \quad . \quad . \quad . \quad . \quad (4)$$

The modulus of elasticity by definition equals the load per square inch divided by the strain per inch of length, within the elastic limit. Hence

$$E_t = \frac{p}{\epsilon} = \frac{p}{\frac{\lambda}{l}} = \frac{pl}{\lambda} = \frac{Pl}{F\lambda}. \quad . \quad . \quad . \quad . \quad . \quad (5)$$

Resilience U = mean force × total space = $\frac{1}{2}P'\lambda'' = \frac{1}{2}P'\epsilon''l = \frac{1}{2}T'\epsilon''Fl$. But Fl equals the volume V.

$$\therefore \quad U = \tfrac{1}{2}T'\epsilon''V = \tfrac{1}{2}P'\epsilon''l. \quad . \quad . \quad . \quad . \quad (6)$$

50. Modulus of Elasticity from Sound emitted by a Wire.—Let l equal the length of the wire, d equal its specific gravity, n equal the number of vibrations per second, v equal the velocity in feet per second.

Determine the number of vibrations by comparing the sound emitted, caused by rubbing longitudinally, with that made by the vibration of a tuning-fork. In this manner determine the note emitted. The number of vibrations per second can be found by consulting any text-book devoted to acoustics.

We shall have finally

$$v = 2nl;$$

also

$$v = \sqrt{\frac{Eg}{d}}$$

from which

$$E = \frac{v^2d}{g} = \frac{4n^2l^2d}{g}. \quad . \quad . \quad . \quad . \quad . \quad . \quad . \quad (7)$$

This result usually gives a larger value by one or two per cent than that obtained by tension-tests, owing to the viscosity of the body.

51. Formulæ for Compression-tests.—The compression-tests are of value in determining the safe dimensions of material subject in use to a crushing or compressive stress. Nearly

all bearings in machinery, a portion of the framework, the connecting-rod of an engine, during some portion of a revolution, are illustrations of common occurrence, of members strained by compression. Columns and piers of buildings, masonry-walls, are familiar illustrations in structures.

The subject is naturally divided into two heads, the strength of short specimens and the strength of long specimens, since the strain is manifestly different in each case.

Short Pieces, or those in which the length is not more than four diameters, yield by crushing, and the force acts uniformly over each square inch of area, so that formulæ similar to those used in tension apply. (For notation see article 48, page 62.) We have

$$P_c = FC; \quad p = \frac{P}{F} \quad . \quad . \quad . \quad . \quad . \quad . \quad (8)$$

$$\epsilon = \frac{\lambda}{l} \quad . \quad . \quad . \quad . \quad . \quad . \quad . \quad . \quad . \quad . \quad (9)$$

$$E_c = \frac{p}{\epsilon} = \frac{pl}{\lambda} = \frac{Pl}{F\lambda} \quad . \quad . \quad . \quad . \quad . \quad (10)$$

$$\text{Resilience} \quad U_c = \tfrac{1}{2}P''\lambda'' = \tfrac{1}{2}P''\epsilon''l = \tfrac{1}{2}C''\epsilon''Fl. \quad . \quad . \quad (11)$$

The compression-strain is accompanied with a shearing-strain acting at right angles to the specimen equal to $P \sin \alpha \cos \alpha$, being a maximum when $\alpha = 45°$. Hence, brittle materials tend to fly to pieces at that angle, leaving two pyramids with facing points.

Long Pieces, in which the length equals ten or twenty diameters, yield by bending on the side of least resistance.

Rankine's formula is most used for this case (Church's Mechanics, page 374).

Breaking-load for flat ends,

$$P_1 = FC \div \left(1 + \beta \frac{l^2}{k^2}\right) \quad . \quad . \quad . \quad . \quad . \quad . \quad (12)$$

Breaking-load for round-ended or two-pin column,

$$P_0 = FC \div \left(1 + 4\beta\frac{l^2}{k^2}\right). \quad . \quad . \quad . \quad . \quad . \quad (12a)$$

Breaking-load for one round end and one square end or pin and square end,

$$P_1 = FC \div \left(1 + \frac{16}{9}\beta\frac{l^2}{k^2}\right). \quad . \quad . \quad . \quad . \quad (12b)$$

VALUE OF COEFFICIENTS AS GIVEN BY RANKINE.

Coefficients.	Cast-iron.	Wrought-iron.	Timber.
C in pounds per sq. inch.....	80000	36000	7200
β (abstract number).....	1 ÷ 6400	1 ÷ 36000	1 ÷ 3000

Notation in above Formulas.

F = area in square inches.

l = length in inches.

K = radius of gyration.

$K^2 = I \div F$. See page 78 for values of I.

In case the modulus of elasticity is required, *Euler's formula* should be used; in this

$$P_0'' = EI\pi^2 \div l''^2$$

for round-ended columns, in which $l = l'' - \lambda$,

$$E = \frac{P_0''(l-\lambda)^2}{I\pi^2}. \quad . \quad . \quad . \quad . \quad . \quad (13)$$

For a column with flat ends

$$P_1'' = 4EI\pi^2 \div l''^2, \quad l'' = l - \lambda. \quad . \quad . \quad . \quad . \quad (13a)$$

For a column with one pin or round end and the other end square,

$$P_2'' = \tfrac{9}{4}EI\pi^2 \div l''^2, \quad l'' = l - \lambda. \quad . \quad . \quad . \quad . \quad (13b)$$

Euler's formula has only been approximately verified by experiment.

52. Transverse Stress.—*Theory.*—In case of transverse stress the force, or a component of the force, is applied at right angles to the principal dimensions of the material. The material is generally in the form of a beam, and the strains produced make the beam assume a concave form with reference to the direction of the force applied. The result of this is a compression of the fibres nearest the force, and a corresponding elongation of those farthest away. The fibres of the beam not strained or deformed by any longitudinal force lie in what is called the *neutral axis.* The curve which the neutral axis assumes due to the forces acting is termed the *elastic curve.*

The weight carried tends to rupture the beam at right angles to the neutral axis; this stress is equal to the resultant force acting at any point, and is termed the *transverse shear.* In addition to this there is a shearing-force tending to move the fibres of the beam with reference to each other in a longitudinal direction, which is termed *parallel shear;* this force is a small one compared with the other forces, and for that reason is difficult to measure experimentally.

Formulæ.—In this case the external load is applied with an arm, and tends to produce rotation; the result is termed the Moment of Flexure or Bending-moment, which is denoted by M.

The internal moment of resistance is equal to $pI \div e$, in which p equals the intensity of strain on the outermost fibre of the piece, I equals the moment of inertia, e equals the distance of the outermost fibre to the neutral axis. Since these moments must be equal, we have

$$M = pI \div e, \quad . \quad . \quad . \quad . \quad . \quad . \quad . \quad . \quad (14)$$

which formula may be used for strength. We also have

$$EI \div \rho = M, \quad . \quad . \quad . \quad . \quad . \quad . \quad . \quad . \quad (15)$$

which may be used for flexural stiffness (Church's Mechanics, page 250), in which ρ = radius of curvature $= 1 \div \frac{d^2y}{dx^2}$ (approximately).

Hence

$$\pm EI\frac{d^2y}{dx^2} = M, \quad \ldots\ldots\ldots \quad (16)$$

which is the differential equation of the elastic curve.

To find the external moment M, consider the beam as a lever, subject to action of forces, only on one side of the free section. If we consider A as the amount carried by any abutment, or the resistance acting at one end, x the distance to the free section, W the weight of any load or loads between the abutment and the free section, and x' the distance of the point of centre of gravity of these loads to the free section, then by the principles of moments we have the general equation

$$M = Ax - Wx'. \quad \ldots\ldots\ldots \quad (17)$$

In problems relating to the elastic curve assume the general differential equation

$$\pm EI\frac{d^2y}{dx^2} = M.$$

Find the numerical value of M expressed in terms of one dimension of the beam as variable. Thus, as above, $M = Ax - Wx$. Select the origin of co-ordinates in such a position that the constants of integration can be determined. Then integrate. The first integration will give the value of $\frac{dy}{dx}$ or the tangent of the elastic curve; the second integration will give y, the ordinate to the elastic curve.

The *parallel shear* is maximum in the neutral axis, and decreases either way proportionally to the ordinates of a parabola.

The value of the parallel shear per unit of section in the neutral axis is

$$Z_0 = \frac{I}{Ib_0} \times \left\{ \begin{array}{l} \text{area above neutral axis (or below)} \end{array} \right\} \times \left\{ \begin{array}{l} \text{the distance of its centre of gravity from that axis.} \end{array} \right\}; \quad (18)$$

in which I is equal to the moment of inertia, J the total transverse shear, and b_0 the thickness of beam in the neutral axis.

In the ordinary cases of *shearing-forces*, such an act on rivets or pins, the intensity is uniform; this case is considered later.

The following tables of moments of inertia, of transverse loads, and of external moments will be useful in working up the results of the experiments.

TABLE NO. I.

MOMENTS OF INERTIA

	Ordinary Moment. I.	Polar Moment I_p	Max. Fibre Dist. c
Rectangle, width b, depth h.....	$\frac{1}{12}bh^3$	$\frac{1}{12}bh(b^2+h^2)$	$\frac{1}{2}h$
Hollow rectangle, symmetrical....	$\frac{1}{12}(b_1h_1^3-b_2h_2^3)$		$\frac{1}{2}h$
Triangle, width $=b$, height $=h$...	$\frac{1}{36}bh^3$		$\frac{2}{3}h$
Circle of radius r.....	$\frac{1}{4}\pi r^4$	$\frac{1}{2}\pi r^4$	r
Ring of concentric circles.....	$\frac{1}{4}\pi(r_1^4-r_2^4)$	$\frac{1}{2}\pi(r_1^4-r_2^4)$	r_1
Rhombus h = vertical diagonal...	$\frac{1}{48}bh^3$	$\frac{1}{12}bh^4$	$\frac{1}{2}h$
Square with side (b) vertical.....	$\frac{1}{12}b^4$	$\frac{1}{6}b^4$	$\frac{1}{2}b$
" " (b) at 45°.....	$\frac{1}{12}b^4$	$\frac{1}{6}b^4$	$\frac{1}{2}b\sqrt{2}$

TABLE NO. II.

FORMULAS FOR TRANSVERSE LOADS.

	Cantilevers.		Beams with Two Supports.	
	With one End Load P —. Wt. of Beam neglected.	With Uniform Load. $W=wl$.	Load P, in Middle. Wt. of Beam neglected.	Uniform Load. $W=wl$.
Deflection $=d$.....	$\frac{1}{3}Pl^3\div EI$	$\frac{1}{8}Wl^3\div EI$	$\frac{1}{48}Pl^3\div EI$	$\frac{5}{384}Wl^3\div EI$
Maximum fibre-strain f.....	$Plc\div I$	$Wlc\div 2I$	$Plc\div 4I$	$Wlc\div 8I$
Safe load.	$R'I\div lc$	$2R'I\div lc$	$4R'I\div lc$	$8R'I\div lc$
Coefficient R'.....	$Plc\div I$	$Wlc\div 2I$	$Plc\div 4I$	$Wlc\div 8I$
Relative strength, equal length. ...	1	2	4	8
Relative stiffness, equal load.....	1	$\frac{8}{3}$	16	$12\frac{8}{9}$
" " safe load.	1	$\frac{4}{3}$	4	$\frac{16}{9}$
Modulus elasticity.....	$Pl^3\div 3dI$	$Wl^3\div 8dI$	$Pl^3\div 48dI$	$5Wl^3\div 384dI$
Max. shear.....	P at support	W at support	$\frac{1}{2}P$ at supp't	$\frac{1}{2}W$ at supp't

TABLE NO. III.

TABLE OF EXTERNAL MOMENTS IN FLEXURE.

CASES.	Resistance at Origin.	Distance Load to Pt. of Stress.	Shear.	Position for Max. Shear.	Ratio of Shearing Force to W	External Moment.	Position for Max. Moment.	Ratio of Max. Moment. to Wl.
	P_1	x'	J	x_j	$J \div W$	M	x_m	$M_m \div Wl$
BEAMS FIXED AT ONE END.								
I. Loaded at extreme end with W	o	x	$-W$	anywhere	-1	$-Wx$	l	-1
II. Uniform load, of intensity $w = W \div l$	o	x	$-wx$	l	-1	$-\frac{1}{2}wx^2$	l	$-\frac{1}{2}$
III. Uniform load, of intensity $w =$ and additional load W' at extreme end	o		$-W'-wx$	l	-1	$-W'x-\frac{wx^2}{2}$	l	$\frac{W'+\frac{wl}{2}}{-W'+wl}$
BEAMS SUPPORTED AT BOTH ENDS.								
IV. Single load W in the middle: Half of beam next origin.	$\frac{1}{2}W$	$\frac{1}{2}l-x$	$\frac{1}{2}W$	anywhere	$\frac{1}{2}$	$\frac{1}{2}Wx$	$\frac{1}{2}l$	$\frac{1}{4}$
Farther half	$\frac{1}{2}W$	$x-\frac{1}{2}l$	$-\frac{1}{2}W$	anywhere	$-\frac{1}{2}$	$\frac{1}{2}W(l-x)$	$\frac{1}{2}l$	$\frac{1}{4}$
V. Single load W applied at x'' from origin: Between x'' and origin.	$W\frac{(l-x'')}{l}$	x	$\frac{l-x''}{l}W$	anywhere	$\frac{l-x''}{l}$	$\frac{x(l-x'')}{l}W$	x''	$\frac{x''(l-x'')}{l^2}$
Beyond x''	"	$x-x''$	$-x''\frac{W}{l}$	anywhere	$-\frac{x''}{l}$	$\frac{x''(l-x)W}{l}$	"	"
VI. Uniform load of intensity $w = W \div l$	$\frac{1}{2}wl$	x	$w\left(\frac{l}{2}-x\right)$	o and l	$\pm\frac{1}{2}$	$\frac{wx(l-x)}{2}$	$\frac{1}{2}l$	$\frac{1}{8}$
VII. Partial load of uniform intensity $w = W \div x''$ from o to x'': remainder unloaded: Between x'' and origin.	$wx''\frac{(l-x'')}{l}$	$\frac{x}{2}$	$w\left(x''-\frac{x''^2}{2l}-\frac{x}{2}\right)$	o	$1-\frac{x''}{2l}$	$wx\left\{\left(x''-\frac{x''^2}{2l}\right)-\frac{x}{2}\right\}$	$x''-\frac{x''^2}{2l}$	$\frac{x''^2}{2l}\left(1-\frac{x''}{2l}\right)^2$
Beyond x''	"	$x-\frac{1}{2}x''$	$-\frac{wx''^2}{2l}$		"	$\frac{wx''^2}{2}(l-x)$		

53. Moment of Inertia by Experiment.—If the body can be suspended on a knife-edge so that it can be oscillated backward and forward like a pendulum, its moment of inertia can be found as follows: First, balance the body on a knife-edge, and find experimentally the position of its centre of gravity; denote the distance of the centre of gravity from the centre of suspension by S. Weigh the body, and compute its mass M; denote its weight by W. Suspend the body on the knife-edge, and set it swinging through a very small arc; find the time of a single vibration, by allowing it to swing for a long time and dividing by the number of vibrations. Let t equal the time in seconds of a single vibration or beat; let K equal radius of gyration, so that MK^2 equals moment of inertia.

Then, by mechanics,

$$M = W \div g;$$

$$^*MK^2 = \frac{Mt^2gs}{\pi^2};$$

or, by reduction,

$$K^2 = \frac{t^2gs}{\pi^2}. \quad . \quad . \quad . \quad . \quad . \quad . \quad . \quad . \quad (19)$$

In this equation K is reckoned from the point of suspension, and the moment of inertia is the moment around the point of suspension.

The *moment of inertia* about a parallel axis through the centre of gravity, may be denoted by MK_c^2, and we shall have

$$MK_c^2 + MS^2 = MK^2;$$

---

* See Weisbach, Vol. I., page 662.

from which

$$K_c^2 = K^2 - S^2,$$

and

$$MK_c^2 = M(K^2 - S^2).$$

54. **Shearing-stress.**—This strain acts in a transverse direction, without an arm, and thus tends to produce a square break; it acts uniformly over the whole section, so that

$$P = SF; \quad S = P \div F. \quad . \quad . \quad . \quad . \quad . \quad (20)$$

The stress produces on the molecules of the material an angular distortion, which is usually expressed in π measure, or the linear length of the degree of distortion to a radius unity, and is denoted by δ.

Let p_s be the stress per square inch.

$$E_s = p_s \div \delta. \quad . \quad . \quad . \quad . \quad . \quad . \quad . \quad (21)$$

E_s is termed the modulus of rigidity.

The coefficient of shearing-strength S can be obtained by direct experiments, by using the specimen in the form of pins or rivets holding links together, the links being fitted to go in the machine like tensile specimens, and tensile force applied; if the specimen is a plate, its resistance to shearing-strain can be found by forcing a punch through, as in compression-strains. The angular distortion cannot be measured directly, but may be determined by tests in torsion, as described.

55. **Torsion.**—The strain produced by torsion is essentially a shearing-strain on the elements of the specimen. The effect of torsion is to arrange the outer fibres of the specimen into the form of helices, as can readily be seen by examining a test-piece broken by torsion stress; each one of these fibres makes an angle with its original position or axis of the piece, equal to its angular distortion, or δ, which is expressed in π measure. This has the effect also of moving any particle in the surface of

the specimen, through an angle lying in a plane perpendicular to the axis and with its vertex in the axis. This last angle is called α. Letting l equal the length of the specimen, e equal its radius, we have, neglecting functions of small angles,

$$e\alpha = l\delta, \quad \ldots\ldots\ldots \quad (22)$$

from

$$\delta = e\alpha \div l \quad \ldots\ldots\ldots \quad (22a)$$

But since $E_s = p_s \div \delta$,

$$E_s = p_s l \div e\alpha; \quad \ldots\ldots\ldots \quad (22b)$$

from which E_s, the modulus of rigidity, may be computed. Since the external moment of forces is equal to the internal moment of resistance, if we let P equal the external load, a its lever-arm, and I_p the polar moment of inertia, we will have

$$Pa = (p_s I_p) \div e, \quad \ldots\ldots\ldots \quad (23)$$

from which

$$p_s = Pae \div I_p. \quad \ldots\ldots\ldots \quad (24)$$

For a circular rod of radius r_1,

$$I_p = \frac{\pi r_1^4}{2}, \text{ also } e = r.$$

Let the external moment $Pa = M_t$. Then

$$M_t = Pa = \frac{p_s \pi r^3}{2};$$

$$p_s = \frac{2M_t}{\pi r^3}.$$

The torsional resilience, or work done, will equal the average load multiplied by the space, or

$$U_1 = \tfrac{1}{2}P_1 a\alpha. \quad \ldots\ldots\ldots \quad (25)$$

56. Modulus of Rigidity of a Wire by swinging under Torsion.—The transverse modulus of elasticity, or the modulus of rigidity, can be determined by hanging a heavy weight on the wire, and swinging it around a verfical axis passing through its point of suspension. Let l equal its length in feet, r its radius in feet, I_p the polar moment of inertia of the swinging weight, t the time in seconds of an oscillation. Let E_s be the modulus of rigidity. Then

$$E_s = \frac{\pi I_p l}{g^2 t^2 r^4}. \quad \ldots\ldots\ldots \quad (26)$$

57. Relation of E_s and E_t.—Let the distortion in direction of the stress equal ϵ, the angular lateral distortion $= \delta$, the lineal lateral distortion $= m$; then

$$\tan\left(45° - \frac{\delta}{2}\right) = \frac{1 - m}{1 + \epsilon} = 1 - m - \epsilon, \text{ nearly.}$$

But since δ is small,

$$\tan\left(45° - \frac{\delta}{2}\right) = 1 - \delta, \text{ nearly.}$$

Hence, by substituting,

$$\delta = m + \epsilon.$$

Now

$$E_t = \frac{p}{\epsilon} \quad \text{and} \quad E_s = \frac{\frac{1}{2}p}{\delta};$$

Hence

$$\frac{E_s}{E_t} = \frac{\epsilon}{2\delta} = \frac{\epsilon}{2(m+\epsilon)}.$$

In cast-iron, by experiment, Prof. Bauschinger found for cast-iron $m = .23\epsilon$; hence for this case $E_s = 0.407E_t$.

58. Combination of Two Stresses. *Intensity of combined Shearing* and normal Stress.*—Let q be the intensity of the shearing-stress, which acts on the transverse section and on a parallel section, and let p be the intensity of the normal stress on the transverse section; it is required to find a third plane such that the stress on it is wholly normal, and to find r the intensity of that stress; let this plane make an angle θ with the transverse section. Then, from equilibrium of forces,

$$(r-p)\cos\theta = q\sin\theta, \quad \text{and} \quad r\sin\theta = q\cos\theta.$$

Hence

$$q^2 = r(r-p),$$

$$\tan 2\theta = 2q \div p. \quad . \quad . \quad . \quad . \quad . \quad . \quad . \quad (27)$$

$$r = \tfrac{1}{2}p \pm \sqrt{q^2 + \tfrac{1}{4}p^2}. \quad . \quad . \quad . \quad . \quad (28)$$

58a. Twisting combined with Longitudinal Stress.—In a circular rod of radius r_1, a total longitudinal force P in the direction of the axis gives a longitudinal normal stress

$$p_1 = P \div \text{area} = p \div \pi r_1^2.$$

A twisting-couple M applied to the same rod gives a shearing-stress whose greatest intensity

$$q_1 = 2M_t \div \pi r_1^3.$$

* Encyc. Britannica, art. "Strength of Materials."

The two together give rise to a pair of principal stresses, as above,

$$r = \frac{P}{\pi r_1^2} \pm \sqrt{\left(\frac{2M}{\pi r_1^3}\right)^2 + \frac{P^2}{4\pi r_1^4}} \quad . \quad . \quad . \quad . \quad . \quad (29)$$

59. Twisting combined with Bending.—This important practical case is realized in a crank-shaft.

Let P be the force applied to the crank-shaft; let R be the radius of the crank-shaft; let B equal the outboard bearing, or the distance between the plane of revolution of the centre of the crank-pin and the bearing.

If we neglect the shearing-force, there are two forces acting: a twisting-force $M_1 = PR$, and bending-moment $M_2 = PB$. The stresses per unit of area on the outer fibre would be $p_t = 4M_2 \div \pi r_1^3$ (in which r_1 is the radius of the crank-shaft) from formulæ for transverse strength, and $p_s = 2M_1 \div \pi r_1^3$ from formula for torsion.

Combining these as in equation (27), we find for the principal stress

$$r = 2(M_2 \pm \sqrt{M_1^2 + M_2^2}) \div \pi r_1^3.$$

By substituting values of M_1 and M_2,

$$r = 2P(B \pm \sqrt{B^2 + R^2}) \div \pi r_1^3. \quad . \quad . \quad . \quad . \quad (30)$$

The greatest shearing-stress equals

$$p_s = 2P\sqrt{B^2 + R^2} \div \pi r_1^3. \quad . \quad . \quad . \quad . \quad . \quad . \quad (31)$$

The axes of principal stresses are inclined so that

$$\tan 2\theta = M_1 \div M_2 = R \div B. \quad . \quad . \quad . \quad . \quad . \quad . \quad (32)$$

60. Thermodynamic Relations.*—Thermodynamic theory shows that heat is absorbed when a solid is strained by opposing and is given out when it is strained by yielding to any elastic force of its own, the strength of which would diminish if the temperature were raised. As, for example, a spiral spring suddenly drawn out will become lower in temperature, but when suddenly allowed to draw in will rise in temperature. With an india-rubber band the reverse condition is true, which indicates that the effect of heat is to contract instead of to expand the rubber. From this theory the rise in temperature can be calculated for a given strain. Thus let t equal the absolute temperature of the body; θ the elevation of temperature produced by sudden specific stress p; let e equal the corresponding strain; J Joule's equivalent; k the specific heat of the body under constant stress; δ its density. Then

$$\theta = \frac{tep}{Jk\delta}. \quad . \quad . \quad . \quad . \quad . \quad . \quad . \quad . \quad (33)$$

in which both e and p are infinitesimal, or very small quantities.

Rubber differs from other material in the relation of strain to stress and consequently in the direction of curvature of the strain diagram. While most materials show a great increase in strain after passing the elastic limit, rubber on the contrary shows a decrease.

---

*See paper by Wm. Thomson in Philosophical Magazine 1877, also vol. III, page 814, ninth edition Encyc. Britannica.

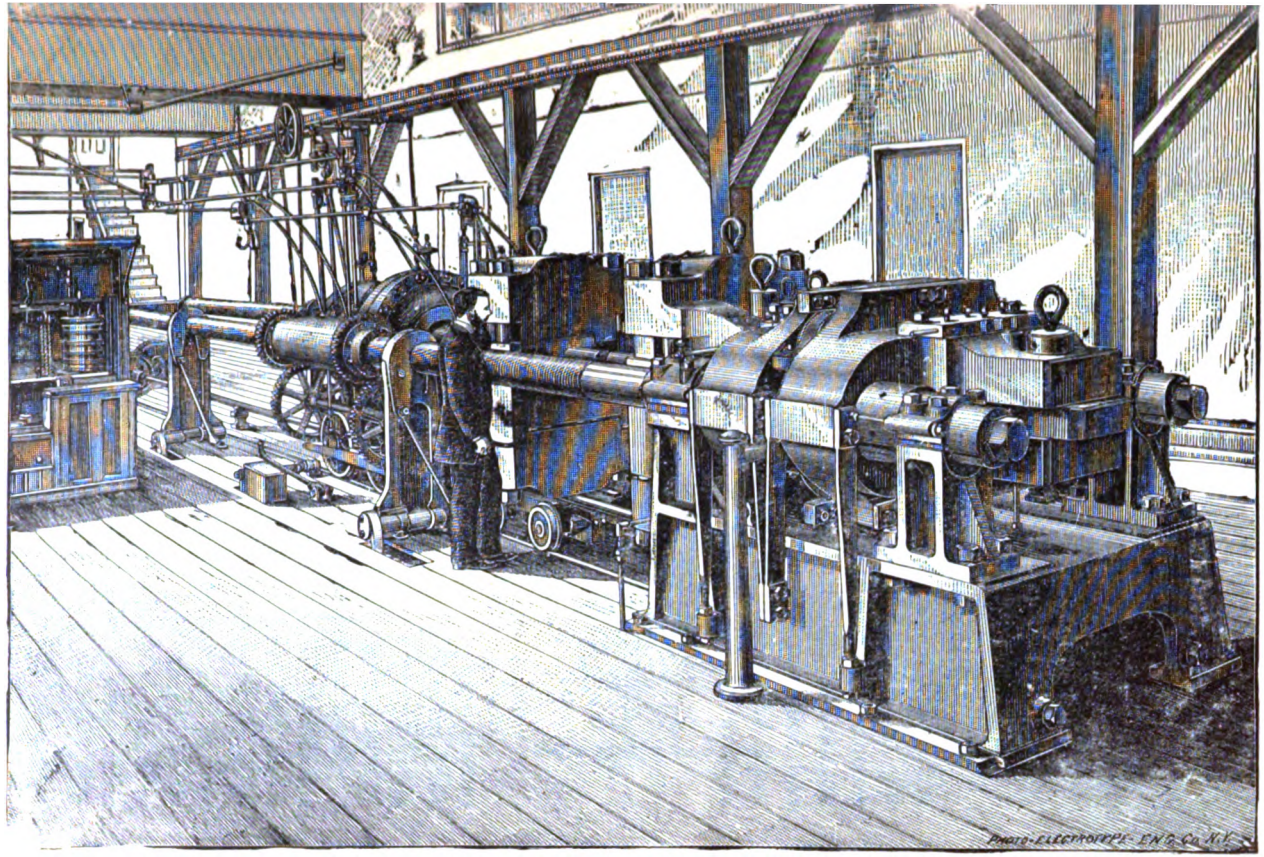

FIG. 28.—THE EMERY TESTING-MACHINE AT THE UNITED STATES ARSENAL AT WATERTOWN.

CHAPTER IV.

STRENGTH OF MATERIALS—TESTING MACHINES.

61. Testing-machines and Methods of Testing.—The testing-machines consist essentially of, first, a device for weighing or registering the power applied to rupture material; second, head and clamps for holding the specimen; third, suitable machinery for applying the power to strain the specimen; and fourth, a frame to hold the various parts together, which must be of sufficient strength to resist the stress caused by rupture of the specimen. Machines are built for applying

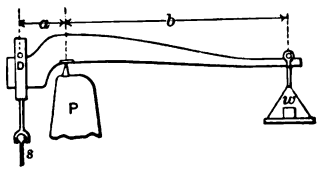

FIG. 29.—OLD FORM.

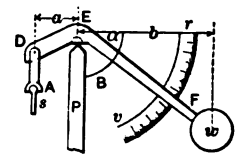

FIG. 30.—THURSTON, POLMEYER.

tensile, compressive, transverse, and torsional stresses; they vary greatly in character and form; some are adapted for applying more than one kind of stress, while others are limited to a single specific purpose.

In all machines the weighing device should be accurate and sufficiently sensitive to detect any essential variation in the stress, and every laboratory should be provided with means for calibrating testing-machines from time to time; the weighing system is usually independent of the system for applying power, although in certain early machines a single lever mounted on a fulcrum was used, as shown in Figs. 29 and 30, and in which the power system and weighing system were combined, the power applied being measured by multiplying the weight by the ratio of the lever-arms b/a.

The power system, when independent of the weighing system, usually consists of a hydraulic press, as shown in Fig. 31, or a train of gears, as shown in Fig. 32. The principal advantage of having the power system independent from the weighing system is due to the fact that under such conditions the stretching of the specimen, which almost invariably takes place, does not affect the accuracy of weighing.

The shackles or clamps for holding the specimen vary with the strain to be applied. The clamps for tension-tests usually consist of truncated wedges which are inserted in rectangular

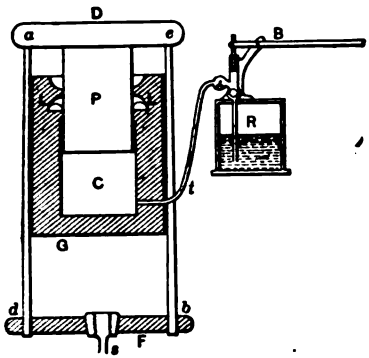

FIG. 31.—HYDRAULIC PRESS.

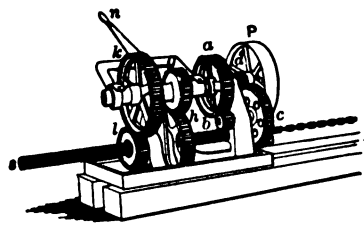

FIG. 32.—FORM OF GEARING.

openings in the heads of the testing-machines, and between which the specimen is placed. The interior face of the wedges is for flat specimens, plane or slightly convex and serrated, but for round or square specimens is provided with a triangle or V-shaped groove into which the head of the specimen is placed. When the strain is applied to the specimen the wedges are drawn close together, exerting a pressure on the specimen somewhat in proportion to the strain and often injurious to its strength. In many instances shackles with internal cut threads are used, into which specimens provided with a corresponding external thread are screwed; this latter construction is much preferable to the former, though adding much to the expense of preparing the specimen. It is very important that the shackles should hold the specimens firmly and accurately in

the axis of the machine and should not exert a crushing strain which is injurious to the material.

General Character of Testing-machines.

Testing-machines are classified as *vertical* or *horizontal*, depending upon the position of the specimen; this, however, is not an important structural difference, although certain classes of machines are better adapted for the one method of testing than the other. Machines may also be classified as *tensive*, *compressive*, or *transverse* machines, depending upon whether they are better suited to apply one class of stresses than the other, but as the method of testing is generally dependent simply upon the method of supporting the specimen, this classification is of little importance structurally. Machines can

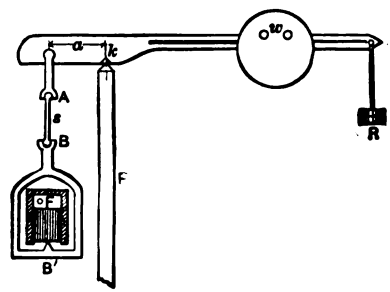

FIG. 33—WICKSTEED, MARTENS, MICHAELIS, BUCKTON.

perhaps be best classified by the form and character of weighing mechanism, it being generally understood that power may be applied through the medium of gears or by a hydraulic press, as desired, and with any class of machine.

Under this classification we have:

First, the *simple lever machines*, forms of which have been shown in Figs. 29 and 30, in which the power for breaking was obtained from the weighing mechanism. Fig. 33 shows a single-lever machine much used at the present time in England, in which the power is applied to the specimen at *B*, and the amount of stress is determined by the position of the jockey weight *w*, and the amount of weight on the poise *R*.

A single-lever machine in which the lever is of the second order is shown in Fig. 34. The specimen is placed between the fulcrum and the weighing mechanism. The latter consists of a hydraulic cylinder with diaphragm and attached gauge, and is interesting as being the prototype of the Emery testing-machine.

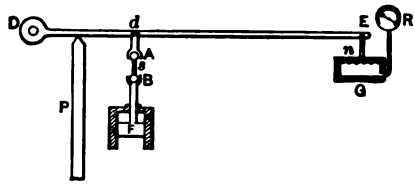

FIG. 34.—THOMASSET.

Second, *differential-lever machines*, one kind of which is shown in Fig. 35. This consists of a single lever with poise, to which the draw-head is connected by links placed at unequal

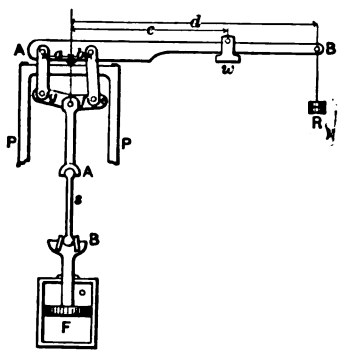

FIG. 35.—RIEHLÉ.

distances from the fulcrum. A machine of this form was manufactured at one time by Riehlé Brothers.*

Third, *compound-lever machines.* These have been much used in America for the last twenty years, and are manufactured by Riehlé Brothers, Olsen, and Fairbanks. In these machines power is usually applied by gearing; at least, such a construction is generally preferred in this country. The diagram,

* The forces acting in this machine can be represented by the following equation:

$$Rd + wc = \frac{F}{f+g}(af - bg).$$

Fig. 36, shows the arrangement of levers adopted in the Fairbanks machine. Power is applied at *F*, specimen is placed at *s*, and the stress is transmitted by the various levers *P*, *E*, and *c*

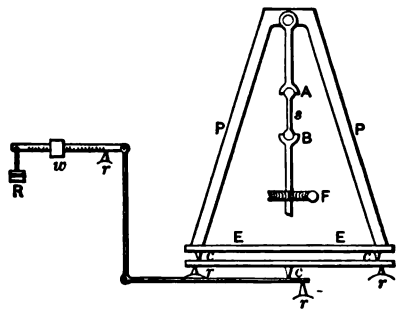

FIG. 36.—FAIRBANKS MACHINE.

to the weighing-scale. The various fulcrums marked *r* rest on a fixed support.

Fig. 37 shows arrangement of levers adopted in the Olsen and Riehlé machines, power being applied to the lower draw-head *B*, and the stress transmitted through the specimen by means of the various levers to the weighing-scale *w*. In this diagram *P* denotes the position of fixed fulcrums. By placing the specimen between the lower draw-head *B* and the platform *EE*, it may be broken by compression. By providing suitable support resting on the platform *EE* a transverse stress can be applied.

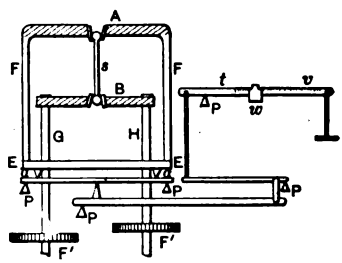

FIG. 37.—OLSEN AND RIEHLÉ.

Fourth, *direct-acting hydraulic machines*. Fig. 38 shows a simple form of a hydraulic machine, in which power is applied by liquid pressure to move the piston *R*, the specimen being located at *s* for tension and at *a'b'* for compression. Machines of this kind have been built of the very largest capacity, as for instance that designed by Kellogg at Athens, Pa., has a capacity of 1,250,000 pounds, and at the Phœnix

Iron Works has a capacity of 2,000,000 pounds, while one built by Professor Johnson at St. Louis has a capacity of about 750,000 pounds. In all these machines the stress is measured by multiplying the readings of the gauge by a constant depending upon the area of the cylinder, the effect of

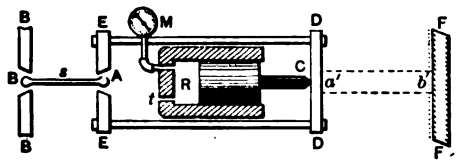

FIG. 38.—KELLOGG, JOHNSON.

friction being eliminated by keeping the piston rotating, or in other cases neglecting it or determining its amount and correcting the results accordingly. Such machines are not adapted for accurate testing, but are suited for testing of a character which permits considerable variation from the correct results.

A modified form of the simple hydraulic machine was made by Werder in 1852, having a capacity of 100 tons, the principle of its construction being shown in Fig. 39. In this machine the line of action of the stress is in *RF*, while that

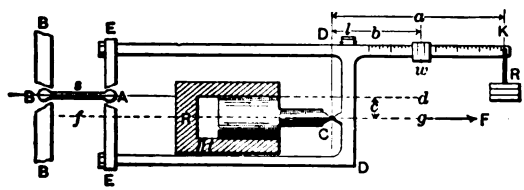

FIG. 39.—THE WERDER, 1852.

of the resistance is in the line *Ad* which is to one side of *RF*. These forces are balanced by adjusting the weights on the scale-beam, thus providing means of weighing the force applied to the specimen.

Fig. 40 is a sketch of the working parts of the Maillard machine, in which the weighing apparatus consists of a fluid which is put under pressure by means of a diaphragm against

which the stress applied to the specimen reacts. This force is measured on a hydraulic gauge similar in many respects to the weighing apparatus of the Emery testing-machine.

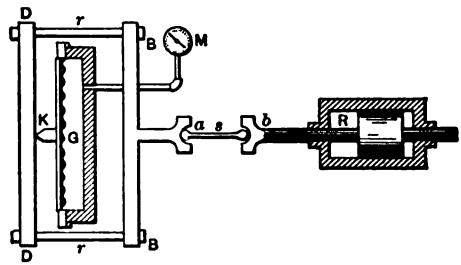

FIG. 40.—MAILLARD.

Fifth, *the Emery machine.* The general principle of the Emery testing-machine is shown in Fig. 41. Power is applied by means of the double-acting hydraulic press R so as to break the specimen either in tension or compression, as desired. The specimen is placed at s, and the stress transmitted is received, if in tension, first by the draw-head BB, thence transmitted to the draw-head $B'B'$, thence in turn to

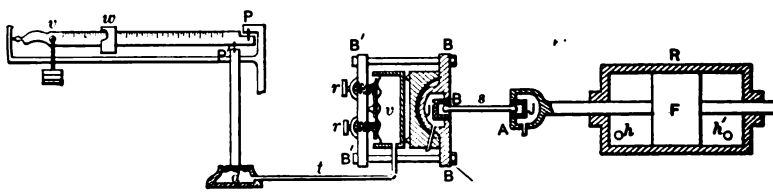

FIG. 41.—EMERY.

the fluid in the hydraulic support v through a frictionless diaphragm, from which the fluid pressure is transmitted to the vessel with the smaller diaphragm d, the pressure of which is balanced and weighed on the weighing-scale w. If the specimen is in compression the force is transmitted by the draw-head BB to the bottom of the hydraulic support v, thus crowding the hydraulic support and its contents against the diaphragm, which in turn causes a liquid pressure which is measured on the weighing-scale as before. The springs which

receive the pressure of the liquid are adjusted by screws *rr*, connected to the frame, and of sufficient strength to resist the greatest stress applied in compression.

In order that the levers of a testing-machine may transmit the force to the weighing poise with as little loss as possible, and in such a manner that a large force can be balanced by a small weight, a *knife-edge* bearing is in nearly every case provided for each lever. The knife-edge as usually constructed is a piece of hardened steel with a sharp edge which is inserted rigidly in the weighing-lever and rests upon a hardened steel plate fastened to the fulcrum, although in some cases the positions of knife-edge and plate are reversed. The knife-edge should be as sharp as it can be made without crumbling or cutting the contact-plate, and it should be kept clean and free from dirt or rust in order to keep the friction at the lowest possible point. In practice the knife-edge is made from 30 to 110 degrees, depending upon the load. Machines of the type shown in Fig. 37 have been constructed in which the friction and other losses as shown by trial did not exceed 100 pounds in 100,000.

The fulcrums for supporting the levers in the Emery testing-machine are thin plates of steel rigidly connected to both the lever and its support, as shown in Figs. 41, 51, and 52. A flexure of the fulcrum-plates is produced by an angular motion of the levers; but as this motion in practice is small, and as the fulcrums are very thin, the loss of force is inappreciable and all friction is eliminated. The plate fulcrums also possess the advantage of holding the levers so that end motion is impossible, and thus preventing any error in weighing due to change of lever-arm. The peculiar form of the plate fulcrums is such as to be unaffected by dirt ; furthermore in practice a higher degree of accuracy in weighing has been obtained than is possible with knife-edge levers. The principal characteristics of the Emery machine are, first, the hydraulic supports, which are vessels filled with a liquid and having a flexible side or diaphragm, which transmits the pressure to a similar support in contact with the weighing apparatus. The

detailed construction of an hydraulic support as used in a vertical machine is shown in Fig. 50, its method of operation in Fig. 41. Second, the peculiar steel-plate fulcrums, which have been described. These together with excellent workmanship throughout have served to make the Emery testing-machine an instrument of precision with a greater range of capacity and an accuracy far superior to that of any other machine.

Fig. 42 gives a perspective view of the Emery machine with the working parts marked the same as in the diagram.

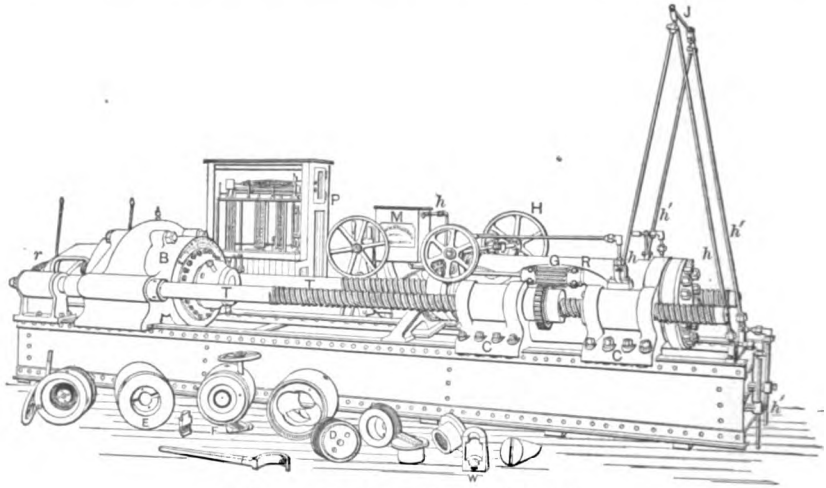

FIG. 42.—EMERY HORIZONTAL MACHINE.

In this figure M is the pump for operating the hydraulic press, hh' the connecting piping, TT screws forming a part of the frame and used for adjusting the position of the press for different lengths of specimens, and of sufficient strength to withstand the shock due to breaking; P is the weighing-case, which contains a very elaborate system of weights which can be applied without handling, as described in detail later.

62. Weighing System.—The *weighing system* in the present English machines, and in former ones built in this country, consists of a single lever or scale-beam, along which can be

moved a poise, and which can be connected by one or more levers to the test specimen. Such machines are objectionable principally from the space occupied.

The weighing device in nearly all recent machines consists of a series of levers, arranged very much as in platform-scales, finally ending in a graduated scale-beam over which a poise is made to move. The machines are usually so constructed that the effect of the strain on the specimen is transmitted into a downward force acting on the platform, and the effect of a given stress is just the same as a given load on the platform.

The weighing-levers usually consist of cast-iron beams carrying hardened steel knife-edges, which in turn rest on hardened-steel bearing plates. This is the system adopted by most scale-makers for their best scales.

In the Emery testing-machines, which are especially noted for their accuracy and sensitiveness, the knife-edges and bearing plates are replaced by thin plates of steel, the flexibility of which permits the necessary motion of the levers.

The weighing device should be *accurate*, and sufficiently sensitive to detect any essential variation in the stress. The amount of sensitiveness required must depend largely on the purposes of the test. An amount less than one tenth of one per cent will rarely make any appreciable difference in the result, and probably may be taken as the minimum sensitiveness needed for ordinary testing. Means should be provided for *calibrating the weighing device.* This can be done, in the class of machines under consideration, by loading the lower platform with standard weights and noting the corresponding readings of the scale-beams. *Testing-machines may be calibrated* with a limited number of standard weights, by the use of a test-specimen, which is not to be strained beyond the elastic limit. The weights are successively added and removed, and strain is maintained on the test-piece, equal to the reading on the calibrated portion of the scale-beam.

63. **The Frame.**—The frame of the machine must be sufficiently heavy and strong to withstand the shock produced

by a weight equal to the capacity of the machine suddenly applied.

The *weighing levers must sustain* all the stress or force acting on the specimen, without sufficient deflection to affect accuracy of the weighing, and the frame must be able to sustain the shock consequent upon the sudden removal of the load, due to breaking, without permanent set or deflection.

64. Power System.—The power to strain or rupture the specimen is usually applied through the medium of a train of gears or by a hydraulic press, operated by power or hand. The hydraulic machine is very convenient when the stress is less than 50,000 pounds; but if there is any leakage in the valves, the stress will be partially relieved the instant the pump ceases to operate, and difficulty may be experienced in ascertaining the stretch for a given load.

65. Shackles.—The shackles or clamps for holding the specimen vary with the strain to be applied. These clamps for tension tests usually consist of truncated wedges which are inserted in rectangular openings in the heads of the testing-machines, and between which the specimen is placed. The interior face of the wedges is for flat specimens plane and serrated, but for round or square specimens it is provided with a triangular or V-shaped groove, into which the head of the specimen is placed. When the strain is applied to the specimen these wedges are drawn closer together, exerting a pressure on the specimen somewhat in proportion to the strain and often injurious to its strength. In tensile testing it is essential to the correct determination of the strength of the specimen that the force shall be applied axially to the material; in other words, it shall have no oblique or transverse component. This requires that the wedge clamps shall be parallel to the specimen, and that the heads which contain the clamp shall separate in a right line and parallel to the specimen.

This construction is well shown in the following description of the clamps used in the Olsen and Riehlé testing-machines.

A plan and section of the draw-heads used with the Olsen machine is shown in Fig. 43. The small numbers refer to

the same part in each view, and also in Figs. 56 to 60, so that any part can be easily identified; 60, 59 is a counterbalanced lever used to prevent the wedges falling out when the strain is relieved; 63, 63, is a screw connected to a plunger for adjusting the space into which the wedge-clamps are drawn. A lateral motion of the specimen is obtained by unscrewing on one side and screwing up simultaneously on the other side:

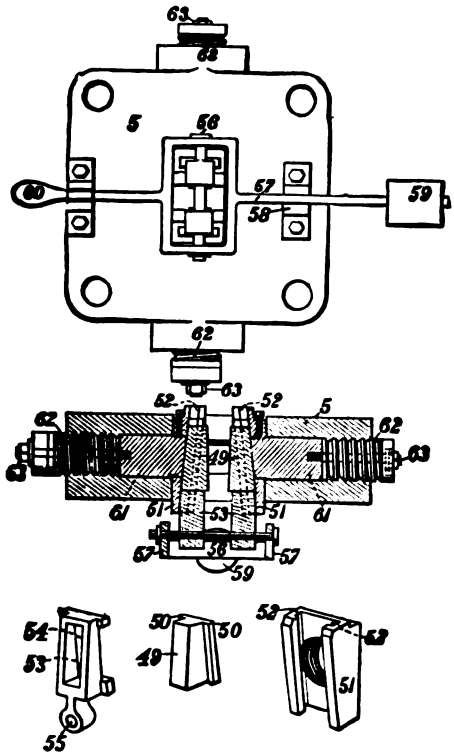

FIG. 43.—DRAW-HEAD TO OLSEN'S TESTING-MACHINE.

this adjustment is of advantage in some instances in centring the specimen. For use of the other parts shown in Fig. 43, see Art. 64.

The clamps used by Riehlé Brothers for holding flat specimens are shown in Fig. 44 and Fig. 46, as follows:

530943

Fig. 45 is a plan of wedge-clamp, with specimen in position; *CC*, curve-faced wedges; *D*, specimen; *A*, draw-head; and *BB* tension-rods.

FIG. 44.

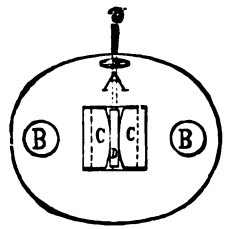

FIG. 45.

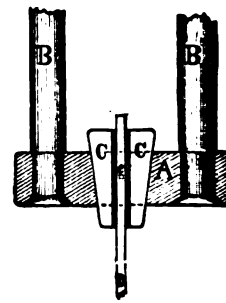

FIG. 46.

Fig. 46 is a sectional view of same. Fig. 44 is a view of the wedge-faced clamp. The inclination of the surfaces of the wedges are exaggerated in the drawings, so as to distinctly set forth their features.

Wedges have been made with spherical backs, and a portion of the draw-heads mounted on ball surfaces in order to insure axial strains. Special holders into which screw-threads have been cut have been used with success, and in many instances the specimens have been fastened to the draw-heads by right and left threaded screws.

66. Specifications for Government Testing-machine.—The large machine in use by the United States Government at the Watertown Arsenal was built by Albert H. Emery. The machine is not only of large capacity, but is extremely delicate and very accurate. A perspective view of the machine is shown in Fig. 28.

The requirements of the United States Government as expressed in the specifications, which were all successfully met, were as follows:

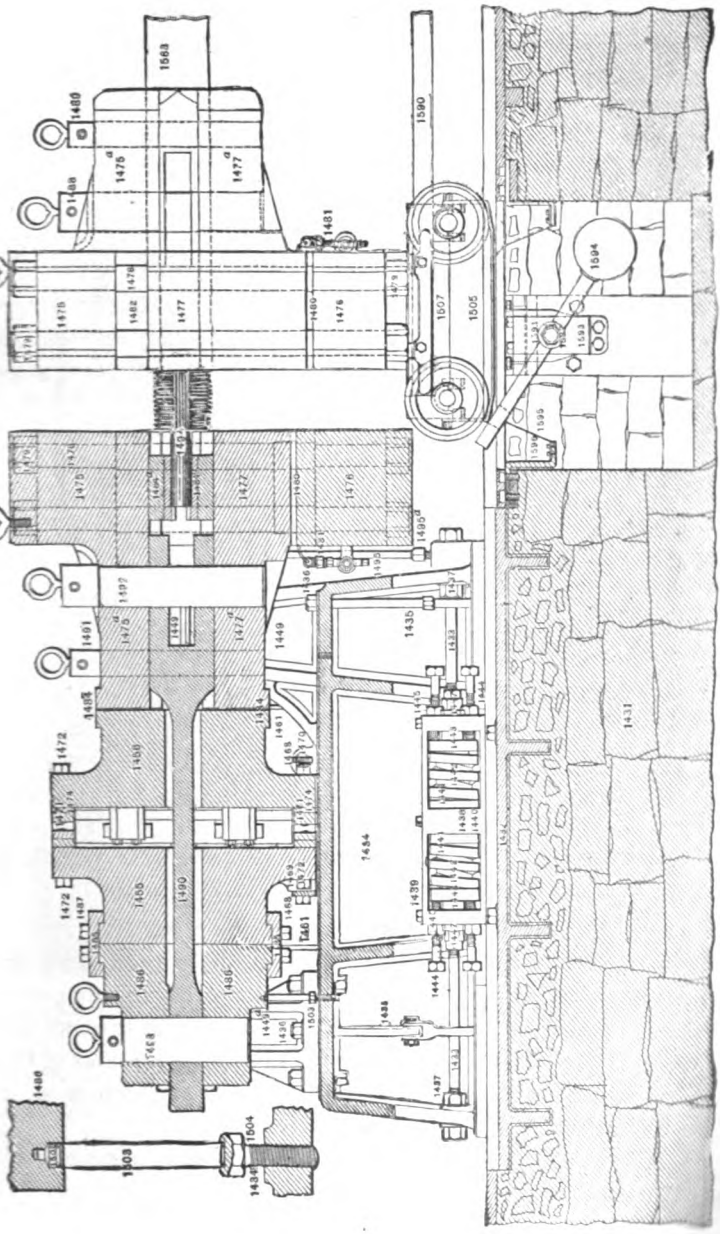

FIG. 47.—LONGITUDINAL SECTION OF END, WITH ELEVATION OF STRAINING-HOLDER.

1st. A machine with a capacity in tension or compression of 800,000 pounds, with a delicacy sufficient to accurately register the stress required to break a single horse-hair.

2d. The machine should have the capacity of seizing and giving the necessary strains, from the minutest to the greatest, without a large number of special appliances, and without special adjustments for the different sizes.

3d. The machine should be able to give the stresses and receive the shocks of recoil produced by rupture of the specimen without injury. The recoil from the breaking of a specimen which strains the machine to full capacity may amount to 800,000 pounds, instantly applied. The machine must bear this load in such a manner as to be sensitive to a load of a single pound placed upon it, without readjustment, the next moment.

4th. The parts of the machine to be at all times accessible.

5th. The machine to be operated without excessive cost.

67. Description of Emery Testing-machine.—These machines are now constructed by Wm. Sellers & Co. of Philadelphia, under a license from the Yale & Towne Mfg. Co. of Stamford, Conn.

The following description will serve to explain the principle on which the machine acts:

The machine consists of the usual parts: 1. Apparatus to apply the power. 2. Clamps for holding the specimen. 3. The weighing device or scale.

1. The apparatus for applying power consists of a large hydraulic press, which is mounted on wheels as shown in the engravings, Fig. 28 and Fig. 47, and can be moved a greater or less distance from the fixed head of the machine. Two large screws serve to fix or hold this hydraulic press in any position desired, according to the length of the specimen: and when rupture is produced the shock is received at each end of these screws, which tend to alternately elongate and compress, and take all the strain from the foundation.

2. Clamps for holding the specimen. These are peculiar to the Emery machine, and are shown in Fig. 47 in section. This

figure also shows a section of the fixed head of the machine, and a portion of the straining-press, with elevation of the holder for the other end of the specimen.

The clamps, numbered 1484 in Fig. 47, are inserted between two movable jaws (1477), which are pressed together by a

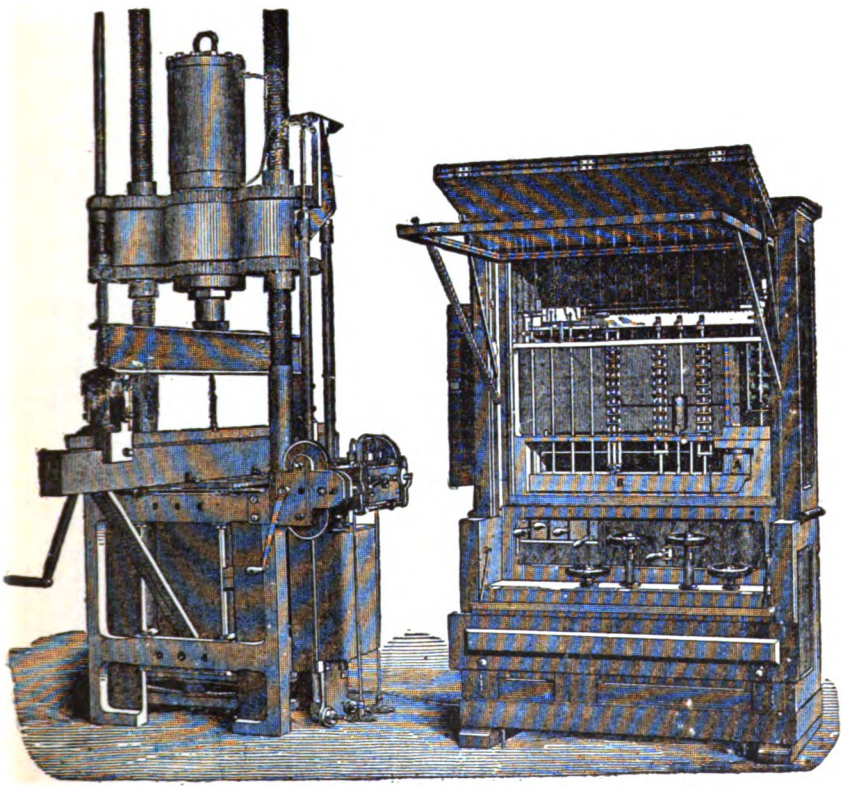

FIG. 48.—ELEVATION OF THE VERTICAL MACHINE.

FIG. 49.—SCALE-BEAM AND CASE.

hydraulic press (1480), resting on the fixed support (1476). By this heavy lateral pressure force equal to 1,000,000 pounds can be applied to hold the specimen. The amount of this force is shown by gauges connected to the press cylinder, and can be regulated as required.

For the vertical machines these shackles or holders are ar-

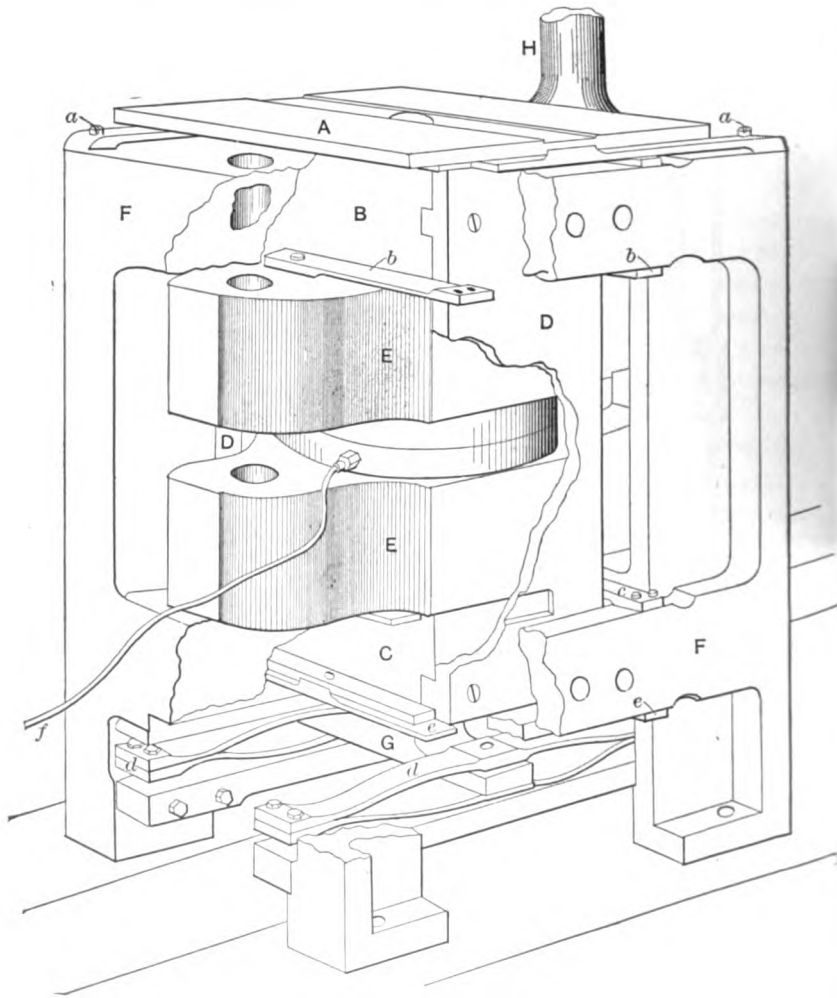

FIG. 50.—THE BASE-FRAME AND ABUTMENTS.

ranged so as to have sufficient lateral motion to keep in the line of the test-piece.

3. The weighing device. This is the especial peculiarity of

the Emery machine: instead of knife-edges, thin plates of steel are used, which are flexed sufficiently to allow the necessary motion of the levers. The steel used varies from 0.004 to

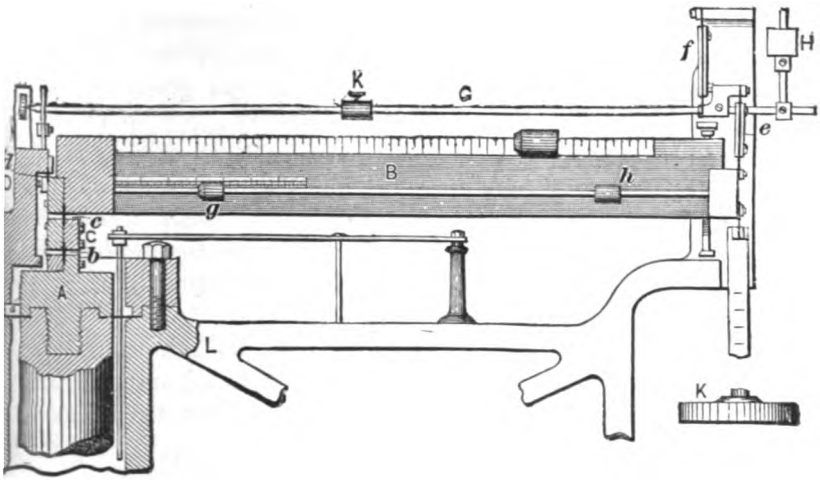

FIG. 51.—BEAM FOR PLATFORM-SCALE.

0.05 inch thick, and the blades are so wide that the stress does not exceed 40,000 to 60,000 pounds per square inch.

Fig. 52 shows the form of fulcrums used for light forces when the steel fulcrums are in tension.

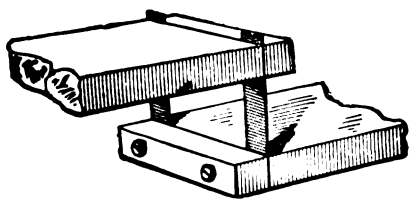

FIG. 52.—CLAMPING SUSPENSION FULCRUMS.

The method of measuring the load is practically that of the hydraulic press reversed, but instead of pistons, diaphragms having very little motion are used. Below the diaphragm is a very shallow chamber connected by a tube to a second

chamber covered with a similar diaphragm, but of a different diameter. Any downward pressure on the first diaphragm is transmitted to the second, giving a motion inversely as the squares of the diameters. This latter motion may be farther increased in the same manner, with a corresponding reduction in pressure, or it may at once be received by the system of weighing levers. The total range of motion given the first diaphragm in the 50-ton testing-machine is $\frac{1}{400000}$ part of an inch, but the indicating arm of the scales has a motion of $\frac{1}{100}$ of an inch for each pound. This increase of motion and corresponding reduction of pressure is accomplished practically without friction. These parts will be well understood by Figs. 50, 51, and 52. The diaphram with connecting pipe, *f*, is shown between the abutments *EE* in Fig. 50.

Fig. 48 shows the elevation of the vertical machine arranged for transverse tests. Fig. 49 shows the scale-beam and case, and Fig. 50 is a section of the base-frame and hydraulic supports. In this last figure the diaphragm, filled with liquid, is placed between the frames *EE*. These frames are allowed the necessary but slight vertical motion by the thin fulcrum-strips *b* and *c*, but at the same time are held from lateral motion. The frame *EE* and diaphragms are supported by springs *d*, so as to have an initial tension acting on the test-piece. The diaphragm and its enclosing rings fill the whole space between the frame to within 0.005 inch, which is the maximum amount of motion permitted.

The pressure on the diaphragm between the frames *EE* is communicated by the tube *f* to a similar diaphragm in communication with the weighing-levers. Fig. 51 represents the weighing-levers for platform-scales. In case a diaphragm is used it is placed beneath the column *A*; the motion of the column *A* is communicated to the scale-beams by a system of levers as shown.

The *scale-beam* of the testing-machine is shown in Fig. 49, and is so arranged that by operating the handles on the outside of the case the weights required to balance the load can be added or removed at pleasure. The device for adding the

weights is shown in Fig. 53. *a*, *b*, *c*, *d*, *e*, and *f* are the weights, which are usually gold-plated to prevent rusting. These when not in use are carried on the supports *A* and *B* by means of pins. When needed, these supports can be lowered by the outside levers, and as many weights as are needed are added to the weighing-poise *CD*.

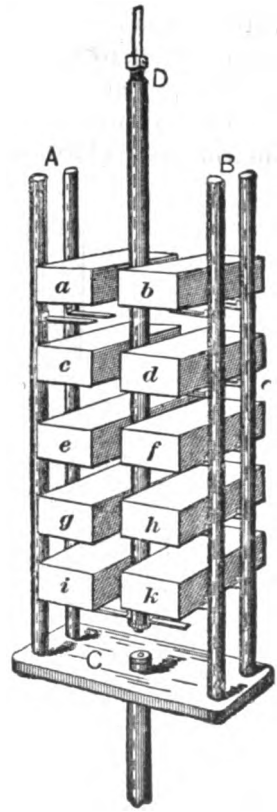

FIG. 53.—DEVICE FOR ADDING OR REMOVING WEIGHTS.

68. Riehlé Brothers' Hydraulic Testing-machines.—The testing-machines built by Riehlé Brothers of Philadelphia vary greatly in principles and methods of construction. In the machines built by this firm, power is applied either by hydraulic pressure or by gearing, and the weighing device consists of one or more levers working over steel knife-edges, as in the usual scale construction.

Machines have been built by this firm since 1876. The form of the first machine constructed was essentially that of a long weighing-beam suspended in a frame and connected by differential levers to the specimen, the power being applied by a hydraulic press. The later forms are more compact. The standard hydraulic machine as constructed by this firm is shown in Fig. 54. In this machine the cylinder of the hydraulic press, which is situated directly beneath the specimen, is movable, and the piston is fixed.

This motion is transmitted through the specimen, and is resisted by the weighing levers at the top of the machine, which are connected by rods and levers to the scale-frame. Two platforms connected by a frame are carried by the weighing levers: the upper one is slotted to receive the wedges for

holding the specimen: the lower one forms a plane table. The intermediate platform, or draw-head, can be adjusted in different positions by turning the nuts on the screws shown in the cut. For tension-strains the specimen is placed between the upper and intermediate head; for compression it is placed between the intermediate and lower heads. An attachment is often added to the lower platform, so that transverse strains can be applied.

The cylinder is connected by two screwed rods to the intermediate platform or draw-head, and when it is forced

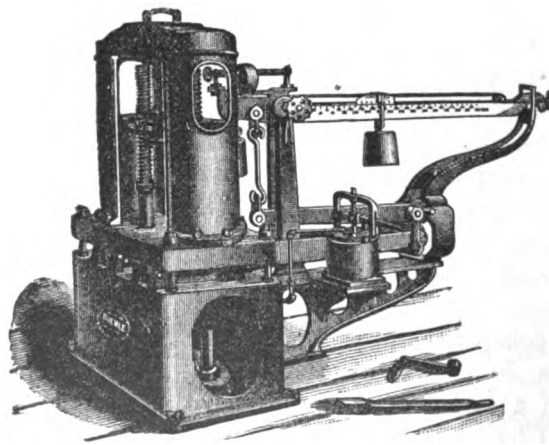

FIG. 54.—HYDRAULIC TESTING-MACHINE.

downward by the operation of the pump this draw-head is moved in the same direction and at the same rate.

69. Riehlé Power Machines.—The machines in which power is applied by gearing are now more generally used than hydraulic machines. Fig. 55 shows the design of geared machine now built by Riehlé Bros., in sizes of 50,000, 100,000, and 200,000 pounds capacity. In this machine both the gearing for applying the power and the levers connected with the weighing apparatus are near the floor and below the specimen, thus giving the machine great stability. The heads for holding the specimen are arranged as in the hydraulic machine, and power is applied to move the intermediate platform up or down

as required. The upper head and lower platform form a part of the weighing system. The intermediate or draw-head may be moved either by friction-wheels or spur-gears at various

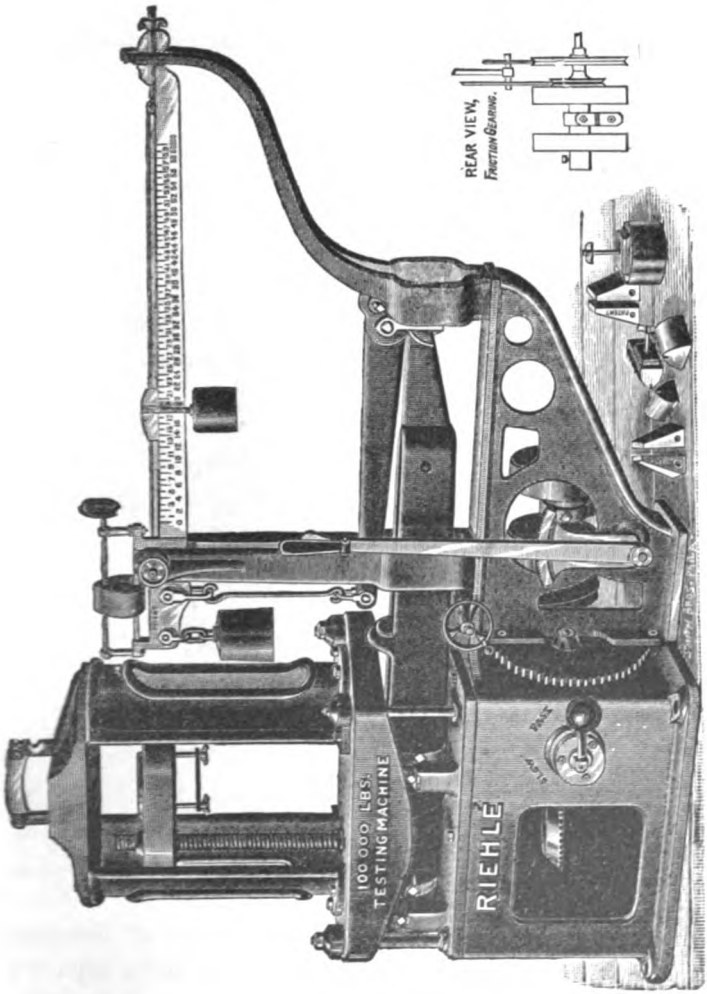

FIG. 53.—RIEHLE'S POWER TESTING-MACHINES.

speeds, which are regulated by two levers convenient to the operator standing near the scale-beam.

The poise can be moved backward or forward on the scale-

beam, without disturbing the balance, by means of a hand-wheel, opposite the fulcrum on which the scale-beam rests.

The scale-beam can be read to minute divisions by a vernier on the poise.

70. Olsen Testing-machine. —*General Form.*—The ma-

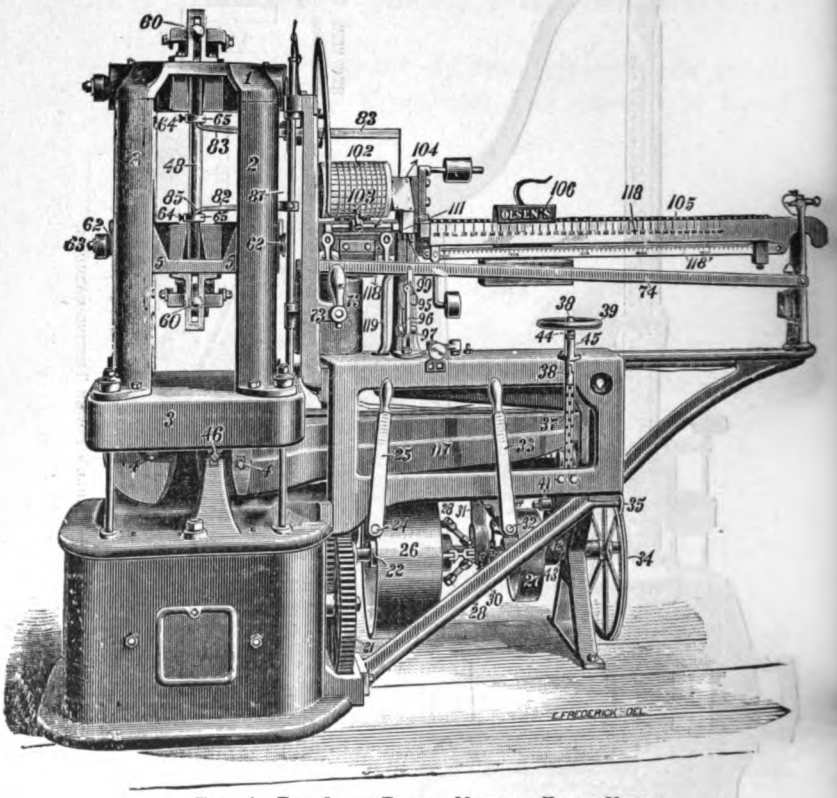

FIG. 56.—THE OLSEN TESTING MACHINE, FRONT VIEW.

chines of Tinius Olsen & Co. of Philadelphia are all operated by gearing, driven by hand in the machines of small capacity, and by power in those of larger capacity.

The general form of the machine is shown in Figs. 56 and 57, from which it is seen that the principles of construction are the same as in the machine last described.

The intermediate platform or draw-head is operated by four screws instead of by two, and there is a marked difference in the arrangement of the weighing-levers and in the gearing.

The machine can be operated at various rates of speed in either direction, and is readily controlled by convenient levers.

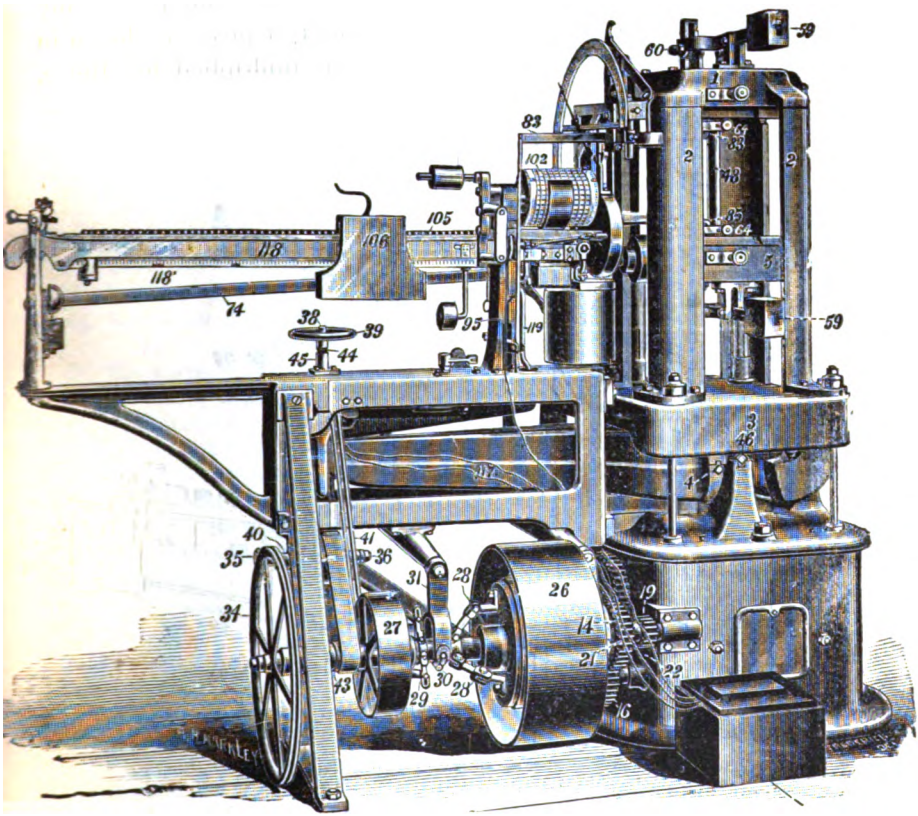

FIG. 57.—THE OLSEN TESTING-MACHINE, REAR VIEW.

71. The Olsen Autographic Apparatus.—This apparatus for drawing strain-diagrams is entirely automatic, and is operated substantially as follows:

The diagram is drawn on a drum (103), parallel to the scale-beam, by a pencil actuated by a screw-thread cut to a fine pitch

on the end of the rod which actuates the poise (106), so that the pencil will move in a definite ratio to that of the poise. The drum is actuated by the stretch of the specimen. This is brought about by four fingers shown in Fig. 56, and on a larger scale in Fig. 58 by numbers 82 and 83. These fingers, shown in plan in Fig. 59, tend to separate and follow any motion of the collars (65) placed on the test-piece, as shown in Fig. 56; the motion of these fingers is multiplied five times,

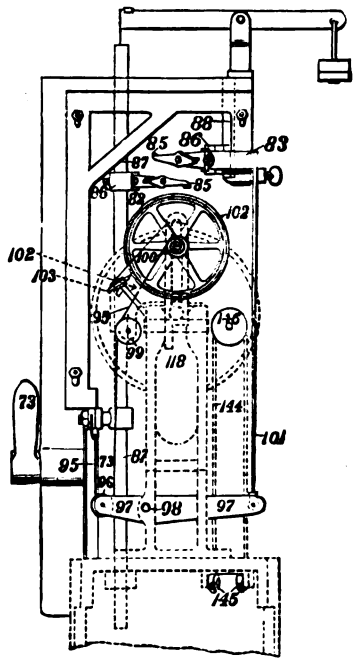

FIG. 58.

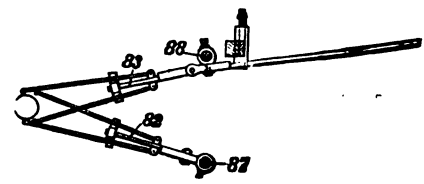

FIG. 59.

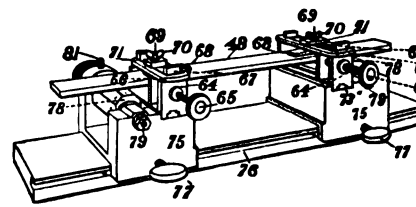

FIG. 60.

and connected by steel bands to the drum, 102, in such a manner that the resultant force only is effective to rotate the drum.

The poise is moved by a friction device attached to the main power system, which is thrown into or out of gear automatically by an electric current, as required to keep the beam floating; the current passes through the scale-beam in opposite directions, according as the place of contact is above or below

the beam. Finally, an alarm-bell is rung whenever the scale-poise moves beyond its normal distance, thus calling the attention of the operator.

Gauge-marking Device.—A special and very ingenious arrangement, shown in Fig. 60, is used to hold the test-piece and mark the extreme gauge-marks in any position desired.

72. Parts of Olsen Machine.—The following reference numbers to the parts of the Olsen machine will serve to show the construction:

1. Entablature.
2. Columns.
3. Platform supporting columns.
4. Pivots.
5. Lower moving head.
22. Sleeve on driving-shaft.
24. Rock-shaft operating lever shifting 22.
25. Hand-lever operating 24.
26, 27. Pulleys rotating driving-shaft.
28, 29. Friction-clutches engaging 26 with driving-shaft.
30. Sleeve operating clutches.
31. Forked lever controlling sleeve 30.
33. Hand-lever operating 30.
34. Grooved wheel on driving-shaft.
40. Tilting bearing.
41. Band-wheel.
42. Endless band.
44. Helical spring.
46. Fulcrum of lever 117.
48. Specimen under test.
49. Gripping jaws.
50. Projecting flanges on jaws 49.
51. Block-slide.
52. Grooves in 51.
53. Slotted slide supporting 49.
54. Opening in 53.
55. Eye in 53.
56. Bolt connecting 53 and 57.
57. Lever to open and shut jaws.
58. Fulcrum of 57.
59 Counterweight.
60. Handle of lever 57.
61. Plungers for slides 51.
62. Screws for 61.
63. Screw-bolt.
64. Collars or clamps for caliper bearings.
72. Guiding-block.
73. Cam.
74. Lever moving 87.
75. Sliding-blocks.
78. Polygonal prism in 75.
82, 83. Calipers.
85. Arm of caliper.
86. Clamps.
95. Cord operating recording-cylinder.
96. Pulley.
97. Lever.
98. Fulcrum to 97.
99. Pulley or sheave.
100. Drum or winding-barrel of 102.
101. Link.
102. Recording-cylinder.
103. Pencil.
104. Screw.
105. Screws shifting 106.
106. Poise or weight.
111. Balancing pivot of beam.
117. Force multiplying lever.
118. Weighing-beam.
118'. Slide to small poise on 118.
119. Link.
144. Endless band for moving poise.
145. Guiding-pulleys.
146. Grooved wheel.

73. Thurston's Torsion Testing-machine.—Both the breaking-strength and the modulus of rigidity can be obtained from the autographic testing-machine invented by Professor Thurston in 1872.

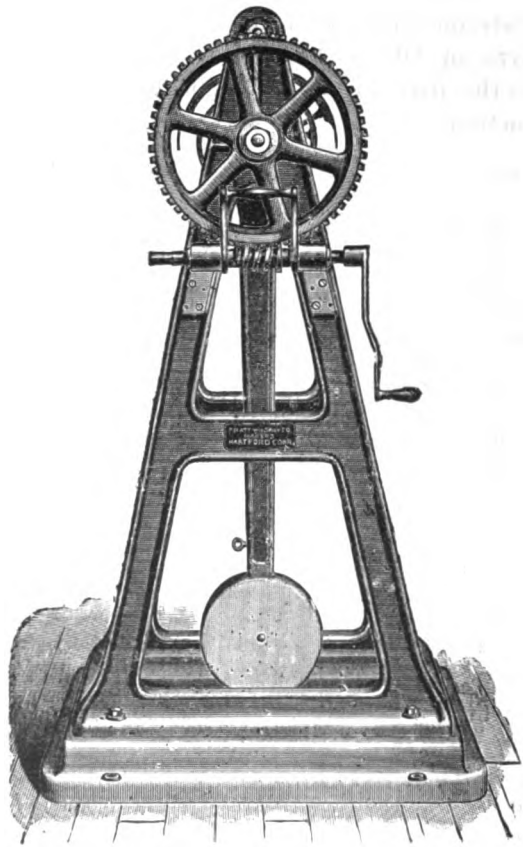

FIG. 61.—THURSTON'S AUTOGRAPHIC TORSION TESTING-MACHINE.

In this machine the power is applied by a crank at one side, tending to rotate the specimen, the specimen being connected at the opposite end to a pendulum with a heavy weight.

The resistance offered by the pendulum is the measure of

the force applied, since it is equal to the length of the lever-arm into the sine of the angle of inclination, multiplied by the constant weight P. A pencil is carried in the axis of the pendulum produced, and at the same time is moved parallel to the axis of the test-piece by a guide curved in proportion to the sine of the angle of deviation of the pendulum, so that the pencil moves in the direction of the axis of the specimen an amount proportional to the sine of this angle. A drum carrying a sheet of paper is moved at the same rate as the end of the specimen to which the power is applied. Now if the pencil be made to trace a line, it will move a distance around the drum which is equal to the angle of torsion (α) expressed in degrees or π measure, and it will move a distance parallel to the axis of the test-piece proportional to the moment of external forces, Pa.

The diagram Fig. 62, from Church's "Mechanics of Engineering," shows the working portions of the machine very clearly. In the figure P is the pendulum, the upper end of

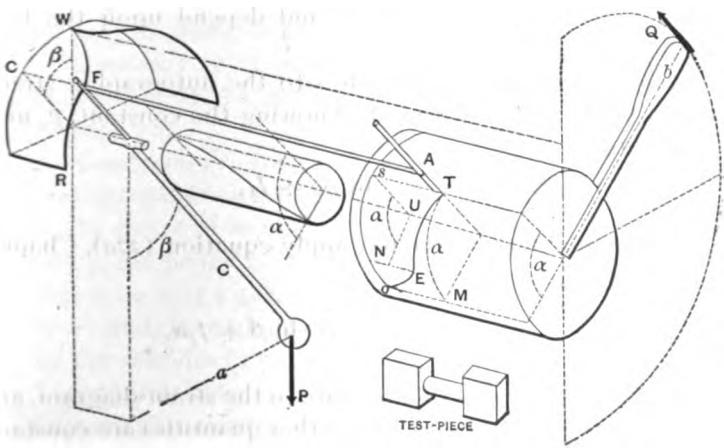

FIG. 62.

which moves past the guide WR, and is connected by the link FA with the pencil AT. The diagram is drawn on a sheet of paper on the drum, which is rotated by the lever b. The

drum moves through the angle α, relatively to the pendulum which moves through the angle β. The test-piece is inserted between the pendulum and drum.

The value of α in degrees can be found by dividing the distance on the diagram by the length of one degree on the surface of the paper on the drum, which may be found by measurement and calculation.

Application of the Equations to the Strain-diagram.—For the breaking-load apply equation (23) of Chapter III.,

$$P\alpha = p_s I_p \div e. \quad . \quad . \quad . \quad . \quad . \quad . \quad . \quad (23)$$

The external moment $P\alpha$ equals $Pr \sin \beta$, in which P is the fixed weight, r the length of the pendulum, β the angle made with the vertical. Hence

$$Pr \sin \beta = p_s I_p \div e.$$

In this equation P and r are constant, and depend upon the machine; I_p and e are constant, and depend upon the test-piece.

$\sin \beta$ is the ordinate in inches to the autographic strain-diagram, and can be measured; knowing the constant, p_s may be computed.

$$p_s = Pr \sin \beta e \div I_p.$$

For the modulus of rigidity, apply equation (22*a*), Chapter III., page 72.

$$E_s = p_s l \div e\alpha = Plr \sin \beta \div I_p \alpha.$$

In this equation $\sin \beta$ is the ordinate to the strain-diagram, and α the corresponding abscissa, the other quantities are constant, and depend on the machine or on the test-piece.

The Resilience (see equation (25), page 83) is the area of the diagram within the elastic limit, expressed in absolute units.

$$U = \tfrac{1}{2} Pa\alpha = \tfrac{1}{2} Pr \sin \beta \alpha.$$

The *Helix Angle* (see equation (22), page 82) $\delta = e\alpha \div l$, in which l is the length of the specimen in inches. The elongation of the outer fibre can be computed by multiplying l by secant δ. The per cent of elongation is equal to secant δ. (Sec δ is equal to the square root of $1 + \tan^2 \delta$.)

74. Machine Constants.—*To obtain the Constants of the Machine.*—First, the external moment Pa. This is obtained on the principle that it is equal to any other external moment which holds it in equilibrium. Swing the pendulum until its centre-line is horizontal; support it in this position by a strut resting on a pair of scales; the product of the corrected reading of the scales into the distance to the axis on the arm will give Pa. Check this result by trials with the strut at different points. Correct for friction of journal. Second, the value of the scale of ordinates can be obtained by measuring the ordinate for $\beta = 90°$ and for $\beta = 30°$, since sine $90° = 1$ and sine $30° = \frac{1}{2}$. Third, the value of the scale of abscissæ can be obtained by dividing the abscissa on the diagram by the radius of the drum including the paper. This may be expressed in degrees by dividing by the length of one degree.

Constants of the Material are obtained by measuring the dimensions of the specimen. The values of I and e are given on page 78.

Conditions of Accuracy.—In obtaining these values, the fol lowing conditions are assumed: Firstly, the test-piece is exactly in the centre of motion of the pendulum and of the drum; secondly, the pencil is in line of the pendulum produced; thirdly, the curve of the guides is that of the sine of the angle of deviation; and, fourthly, the specimen is held firmly from rotation by the shackles or wedges, and yet allowed longitudinal motion. These constitute the adjustments of the machine, and must be carefully examined before each test. Any eccentricity of the axis of the specimen will lead to serious error.

63. Power Torsion-machine.—This machine is shown in Fig. 63*a*. Power is applied at various rates of speed by means of the gearing shown. The specimen is held by means of two chucks: the one on the left is rotated an amount shown by the

graduated scale in degrees; the one on the right is prevented from rotating by a lever, so connected to the scale-beam that when it is balanced the reading is proportional to the torsional force or external moment transmitted through the specimen, expressed in foot-pounds, inch-pounds, or any other units desired. The weighing head is suspended so as to permit free elongation of the specimen. The chucks used have self-centering jaws which will hold the specimen rigidly and central during application of the stress.

Machines of the general class shown in the figure are made in Philadelphia both by Riehlé Brothers and Tinius Olsen,

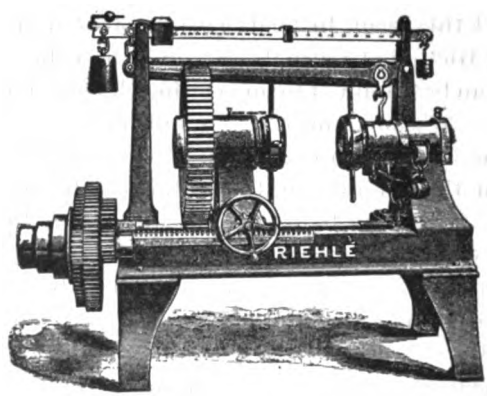

FIG. 63.—THE RIEHLÉ TORSION MACHINE.

which are adapted to testing of specimens of varying diameters and lengths. In the Riehlé machine shown, the adjustment for specimens of various lengths is made by moving the power head; in the Olsen machine the adjustment is made by moving the weighing head and scale-beam, which are arranged in a plane at right angles to the specimen.

The graduated scale attached to the machine for angle of torsion should seldom be used for that purpose, as the specimen is quite certain to slip to greater or less extent in the machine and considerable error will result.

In the Olsen machine the angle of torsion may be measured by clamping dogs on the specimen at each end so as to engage the projections, shown at *b*, Fig. 63*a*, of the index-rings, which are free to move over the graduated scales of the chucks. The angle of torsion of the specimen, for a length represented by the distance between the centres of the dogs, is the angle turned through by the movable chuck less the sum of the angles through

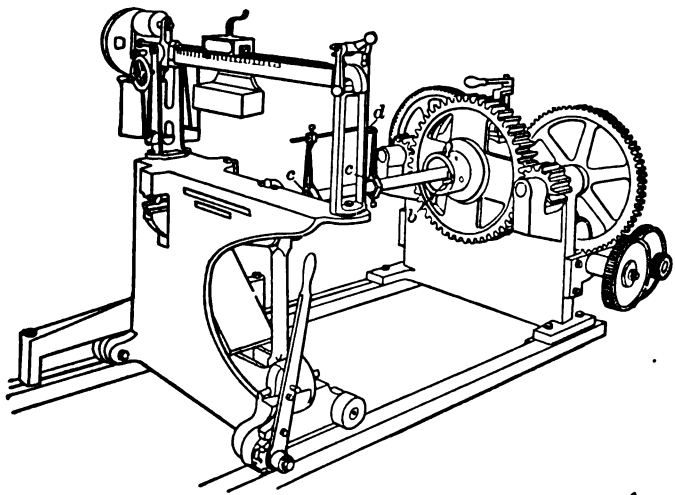

FIG. 63*a*.—OLSEN TORSION MACHINE.

which the index-rings are pushed by the dogs. Let α_1 = angle through which movable chuck is rotated, α_2 = angle through which index-ring on the movable chuck is pushed by the dog, α_3 = angle through which index-ring on fixed chuck is pushed by the dog, and α = angle of torsion. Then

$$\alpha = \alpha_1 - (\alpha_2 + \alpha_3).$$

This angle is measured through short ranges by means of two index-arms clamped to the specimen, as shown at *c*. One arm carries a pointer which plays over an arc (*d*), graduated in inches, whose centre of curvature is the centre of the specimen. The distance traversed by the pointer divided by the radius of the arc gives the angle of torsion in circular measure.

The constant of the machine, or the value of the graduations

on the scale-beam, may be found as follows (see Fig. 63*b*): The fixed chuck is rigidly connected to link K as shown. The torsion moment (Pa) on the specimen tends to rotate the chuck and link as indicated by the arrow. The only additional forces acting on K are the vertical forces of strut P_1 and of the frame through the knife-edges at R. The right end of link K is prevented from dropping down, when no load is on the specimen, by a strut acting upward at R (not shown in figure). R may therefore act either upward or downward, depending upon the intensity of Pa. The weight of K may, however, be entirely neglected since the counterpoise of the machine may be so set that the system is in equilibrium with no stress on the specimen.

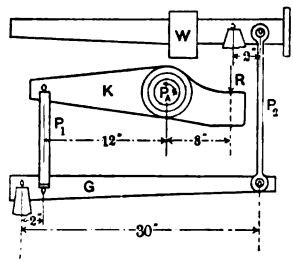

FIG. 63*b*.

With the dimensions shown, weight of poise = 40 pounds, length between divisions on scale-beam = $\frac{2}{3}$ inch, consider K as a free body. Then $\Sigma(Pa) = 0$ and $\Sigma Y = 0$. From which

$$Pa = 12P_1 + 8R \quad \text{and} \quad P_1 = R,$$

or

$$Pa = 20P_1. \quad \ldots\ldots\ldots \quad (1)$$

P_1 acts at a lever-arm of 2 inches in the lower lever G, and P_2 acts at a lever-arm of 30 inches. Then

$$2P_1 = 30P_2 \quad \text{and} \quad P_1 = 15P_2. \quad \ldots\ldots \quad (2)$$

P acts on scale-beam at a lever-arm of 2 inches, and this moment must be balanced by moving the poise W along the distance x. From which

$$2P_2 = Wx. \quad \ldots\ldots\ldots \quad (3)$$

From (1), (2), and (3) we have

$$Pa = 20 \times 15 \times 20x.$$

Make x = 1 scale division = $\frac{2}{3}$ inch.

$$Pa = 4000 \text{ inch-pounds.}$$

Since the value of each division as marked on scale-beam is 200, the constant of the machine is 20.

For an accurate determination of the angle of torsion, it is important that the specimen be kept straight during the application of stress, and that the angle of torsion be measured from arcs or scales having the same centre as the specimen. The method of measuring the angle of torsion, as described for a specimen in the Olsen machine, is accurate and generally applicable.

76. Impact-testing Machine.—*The Drop Test—Testing by Impact.*—This test, see Art. 105, is recommended for material used in machinery, railroad construction, and generally whenever the material is likely to receive shocks or blows in use.

This test is usually performed by letting a heavy weight fall on to the material to be tested. The Committee on Standard Tests of the American Society of Mechanical Engineers recommend that the standard machine for this purpose consist of a gallows or framework operating a drop of twenty feet, the weight to be 2000 pounds, the machine to be arranged substantially like a pile-driver. The impact machine designed by Mr. Heisler consists of a pendulum with a heavy bob, which delivers a blow on the centre of a bar securely held on two knife-edge supports affixed to a heavy mass of metal. This machine is especially designed for comparative tests of cast-iron; it is furnished with an arc graduated to read the vertical fall of the bob in feet, and a trip device for dropping the ram from any point in the arc. A paper drum can be arranged for automatically recording the deflection of the test-pieces.

Let W = the weight of the bob;
h = the distance fallen through;
P = centre load;
λ = deflection.

Then

$$Wh = \tfrac{1}{2}P\lambda.$$

Hence

$$P = 2Wh \div \lambda.$$

77. Machines for Testing Cement.—Cement mortar can be formed into cubes, and after hardening can be tested in the

usual testing-machines for compression; but tensile tests are usually required, and for this purpose a delicate machine with special shackles is needed. In order that the tests may give correct results, it is necessary that the power be applied uni-

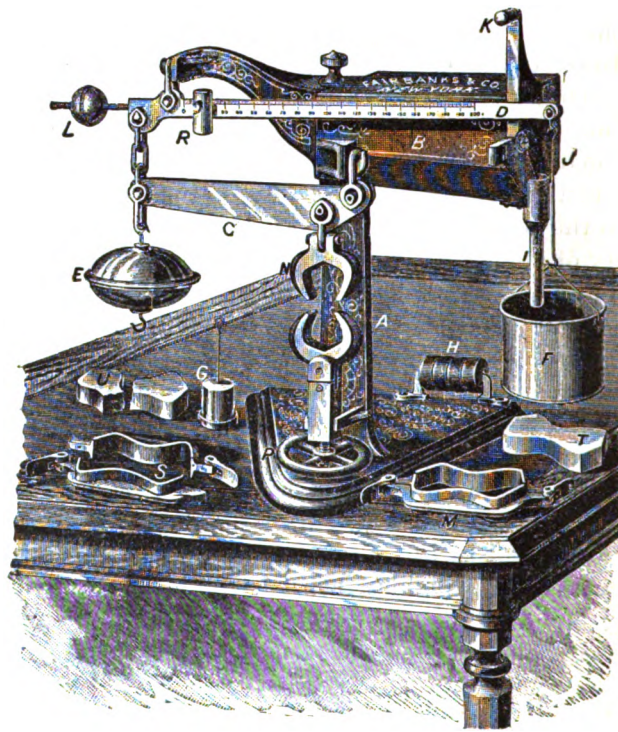

FIG. 64.—FAIRBANKS' CEMENT-TESTING MACHINE.

formly, and absolutely in the line of the axis of the specimen; and to make different tests comparable, the specimen, or as it is called, the briquette, must be always of the same shape and size, and made in exactly the same manner. The engraving (Fig. 64) shows *Fairbanks' Automatic Cement Tester*, in which the power is applied by the dropping of shot into the pail *F*. The specimen is held between clamps, which are regulated at the

proper distance apart by the screw *P*. At the instant of rupture the scale-beam *D* falls, closes a valve, and stops the flow of shot. In Fig. 64 *M* is a closed mould for forming a briquette, *S* the mould opened for removing the briquette, *T* a briquette which has hardened, and *U* one which has been broken.

Directions.—Hang the cup *F* on the end of the beam *D*, as shown in the illustration. See that the poise *R* is at the zero-mark, and balance the beam by turning the ball *L*.

Place the shot in the hopper *B*, place the specimen in the clamps *NN*, and adjust the hand-wheel *P* so that the gradu-

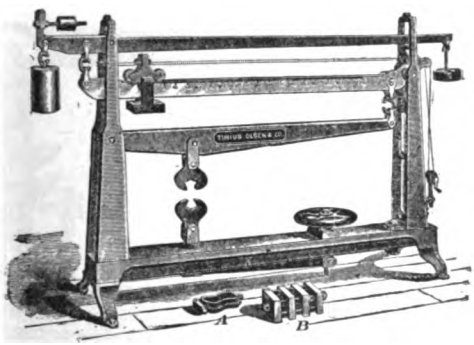

FIG. 65.—OLSEN'S CEMENT-TESTING MACHINE.

ated beam *D* will rise nearly to the stop *K*. Open the automatic valve *I* so as to allow the shot to run slowly. Stand back and leave the machine to make the test.

When the specimen breaks, the beam *D* drops and closes the valve *I*. Remove the cup with the shot in it, and hang the counterpoise-weight *G* in its place. Hang the cup *F* on the hook under the large balance-ball *E*, and proceed to weigh the shot in the ordinary way, using the poise *R* on the graduated beam *D* and the weights *H* on the counterpoise-weight *G*. The result will show the number of pounds required to break the specimen.

An automatic machine designed by Prof. A. E. Fuertes has been in use a long time in the cement-testing laboratory at

Cornell University. In this machine water is supplied flowing from a constant head through a small glass orifice. The fall of the beam consequent on the breaking of the specimen instantly stops the flow of water; the weight of this water, multiplied by a known constant, gives the breaking-load on the briquette.

The Olsen Cement-tester is shown in Fig. 65. The power is applied by the hand-wheel and screw, so that it strains the

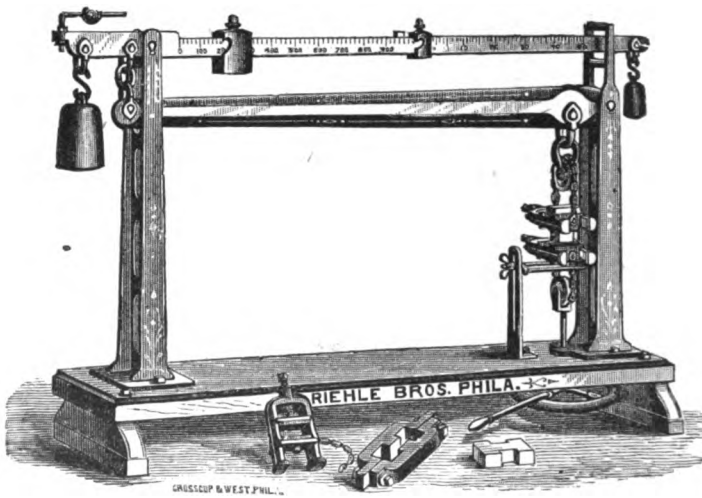

FIG. 66.—RIEHLÉ BROS.' CEMENT-TESTING MACHINE.

briquette very slowly. The poise on the scale-beam is moved by turning a crank so that the beam can readily be kept floating. The peculiar method of mounting the shackles or holders to insure an axial pull is well shown in the engraving.

The Riehlé cement-tester is shown in Fig. 66. The briquette to be tested is placed between two shackles mounted on pivots so as to be free to turn in every direction.

Power is applied to the specimen by the hand-wheel below the machine, and is measured by the reading on the scale-beam at the position of the poise. Special crushing tools, consisting

of a set of double platforms, which may be drawn together by application of the force, is furnished with this machine. The specimen to be crushed is placed between these platforms, and the power applied as for tension.

Besides the machines described, *various* machines for *special testing* are manufactured; these machines have a limited use, and do not merit special description in a work of this character.

TESTING-MACHINE ACCESSORIES.

78. General Requirements of Instruments for Measuring Strains.—In the test of materials it is necessary to measure the amount of strain or distortion of the body in order to compute the ductility and the modulus of elasticity. The ductility or percentage of ultimate deformation can often be obtained by measurement with ordinary scales and calipers, since the latter is usually a large quantity. Thus in the tension-test of a steel bar 8 inches long, it will increase in length before rupture nearly or quite 2 inches; if in the measure of this quantity an error equal to one fiftieth of an inch be made, the resulting error in ductility is only one half of one per cent. In the measure of deformation or strain oc-

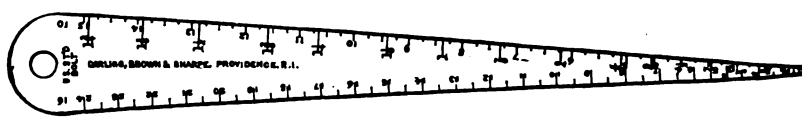

FIG. 67.—THE WEDGE SCALE.

curring within the elastic limit the case is very different, as the deformation is very small, and consequently a very small error is sufficient to make a great percentage difference in the result.

The instruments that have been used for this purpose are called *extensometers*, and vary greatly in form and in principle of construction. The instrument is generally attached to the test-piece, either on one or on both sides, and the strain is obtained by direct measurement with one or two micrometer-screws, or by the use of levers which multiply the deformation so that the results can be read on an ordinary scale. As a

rule, instruments which attach to one side of the test-piece will give erroneous readings if the test-piece either be initially curved, or strained so as to draw its axis out of a right line, and this error may be large or small, as the conditions vary.

The extensometers in use generally consist of some form of a multiplying-lever the free end of which moves over a scale which may or may not be provided with a vernier, a micrometer-screw which is used to measure the distance between fixed points attached to the specimen or the roller and mirror and also various forms of cathetometers.

The Paine Extensometer, which is described later, is a very simple and admirable form of the lever micrometer.

The Bauschinger's Roller and Mirror Extensometer.—To Professor Bauschinger belongs the credit of first systematically taking double measurements on opposite sides of a test-bar.

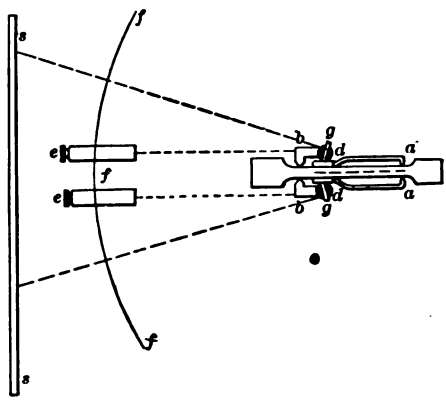

FIG. 68.—BAUSCHINGER'S MIRROR APPARATUS.

The general principle of his apparatus is shown in the annexed figure. It is seen to consist of two knife-edged clips, *b*, *b*, which are connected to the specimen and carry two hard ebonite rollers, *d*, *d*, which turn on accurately centred spindles. The spindles are prolonged, and support mirrors, *g*, *g*, which rotate in the plane of the figure as the spindles rotate. A clip, *aa*, is fastened to each side of the test-piece at the opposite extremity and is connected by spring-pieces,

with the rollers. The spring-pieces are slightly roughened by file, and turn the rollers by frictional contact, so that the least extension of the test-piece causes a rotation of the mirror through an angle. If a scale be placed at *s*, *s*, and telescopes at *e*, *e*, the reflection of the scale will be seen in the mirror in looking through the telescope, and any extension of the test-piece will cause a variation in the reading of the scale as seen in the mirror. The apparatus is equivalent to a lever apparatus having for a small arm the radius of the roller *g*, and for a long arm the double distance of the scale from the mirror. With this instrument it is evidently possible to obtain very accurate measurements, but on the other hand the instrument is very cumbrous and difficult to use. The mean of the two readings with the Bauschinger instrument is the true extension of the piece.

Professor Unwin obviates the use of two mirrors and two telescopes by attaching clips to the centre of the specimen and having the single mirror revolve in a plane at right angles with the plane passing through the clips and the axis of the specimen.

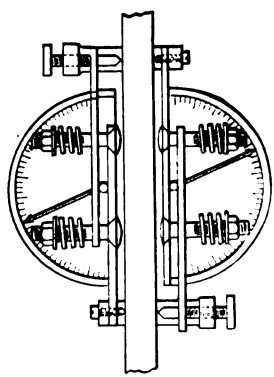

FIG. 69.—THE STROHMEYER EXTENSOMETER.

Strohmeyer's Roller Extensometer was designed in 1886, and is a double-roller extensometer similar in principle to Buzby's and Johnson's. The apparatus consists of a roller carrying a needle which is centred with respect to a graduated scale. The roller moves between side-bars extending to clips which are fastened to each end of the specimen. The tension between these side-bars can be regulated by a spring with a screw adjustment. The objections to this form of extensometer are due, first, to slipping of side-bars on the roller, and second, to the difficulty in making the roller perfectly round.

Regarding the various forms of extensometers, the writer

would say that his experience has covered the use of nearly every form mentioned, and none have proved to be superior in accuracy to that with the double micrometer-screw, and few can be applied so readily.

79. Wedge-scale.—The wedge-shaped scale, Fig. 67, which could be crowded between two fixed points on the test-piece, was one of the earliest devices to be used. In using the scale two projecting points were attached to the specimen, and as these points separated, the scale could be inserted farther, and the distance measured.

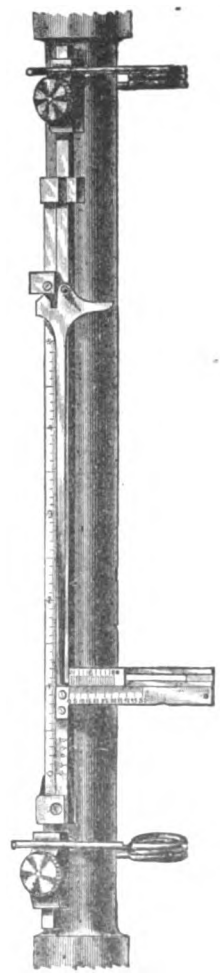

FIG. 70.

80. The Paine Extensometer.— This instrument, shown in Fig. 70, operates on the principle of the bell-crank lever, the long arm moving a vernier over a scale at right angles to the axis of the specimen. It reads by the scale to thousandths of an inch, and by means of the vernier to one ten-thousandth of an inch. Points on the instrument are fitted to indentations in one side of the test-piece, and the instrument is held in place by spring clips. It is of historical importance, having been invented by Colonel W. H. Paine, and used in the tests of material for the Brooklyn Bridge, and also on the cables of the Niagara Suspension Bridge when, a few years since, the question of its strength was under investigation.

81. Buzby Hair-line Extensometer.— This is an extensometer in which the strain is utilized to rotate a small friction-roller connected with a graduated disk as shown in Fig. 71. A projecting pin placed in the axis of the graduated disk is held between two parallel bars, each of which is connected to the specimen. The strain is magnified an amount propor-

tional to the ratio of diameters of the disk and pin. The amount of strain is read by noting the number of subdivisions of the disk passing the hair-line. To prevent error of parallax in reading, a small mirror is placed back of the graduations, and readings are to be taken when the graduations, the cross-hair, and its reflection are in line. In the late styles of this

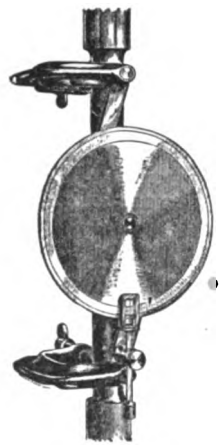

FIG. 71.—BUZBY HAIR-LINE EXTENSOMETER.

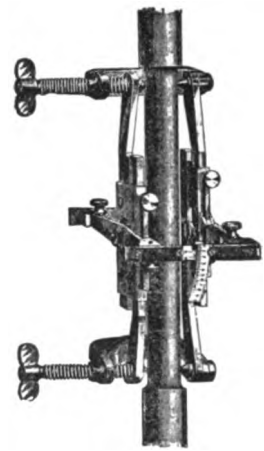

FIG. 72.—THE RIEHLÉ EXTENSOMETER.

instrument the disk is made of aluminium, with open spokes, to reduce its weight.

To operate this instrument it is only necessary to clamp it to the specimen, to adjust the mirror and cross-hair, and then to revolve the disk by hand until the zero-line corresponds with the cross-hair and its reflection. Stress is then applied to the specimen, and readings taken as desired in the manner described.

The Riehlé Extensometer.—The Riehlé extensometer is a combination of compound levers which are attached to both sides of the specimen, and arranged so that one side carries a scale and the other a vernier. It is only mechanical in operation, and can be used on specimens varying in length from 6 to 8 inches. It is adjusted to the specimen by the clamp screws in the usual manner, and the ends of the graduations are then brought together at zero at both sides at the same time. Pressure is then applied to the specimen and the

readings taken in the same manner as any scale and vernier, the scale being graduated to thousandths and the vernier to ten thousandths.

Johnson's Extensometer.—Johnson's extensometer, shown in Fig. 73, is a modification of the Strohmeyer, the elongation being denoted by the motion of a needle over a graduated scale. The elongation for each side is shown separately, and the algebraic sum of the two readings gives the total elongation.

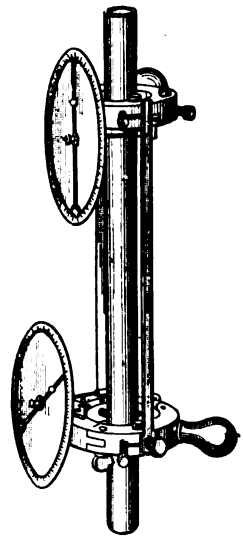

FIG. 73.—JOHNSON'S EXTENSOMETER.

82. Thurston's Extensometer. — This extensometer was designed by Prof. R. H. Thurston and Mr. Wm. Kent, and was the first to employ two micrometer-screws, at equal distances from the axis of the specimen. These were connected to a battery and an electric bell in such a manner that the contact of the micrometer-screws was indicated by sound of the bell. The method of using this instrument is essentially the same as that of the Henning and Marshall instrument, to be described later.

With instruments of this nature a slight bending in the specimen will be corrected by taking the average of the two readings.

The accuracy of such extensometers depends on—

1. The accuracy of the micrometer-screws.

2. The screws to be compensating must be two in number, in the same plane, and at equal distances from the axis of the specimen.

3. The framework and clamping device must hold the micrometers rigidly in place, and yet not interfere with the application of stress.

83. The Henning Extensometer.—This instrument, which was designed by G. C. Henning and C. A. Marshall, is shown in Fig. 74. It is constructed on the same general principles as the

Thurston Extensometer, but the clamps which are attached to the specimen are heavier, and are made so that they are held firmly in position by springs up to the instant of rupture. This extensometer is furnished with links connecting the two parts together. The links are used to hold the heads exactly eight inches apart, and are unhooked from the upper head

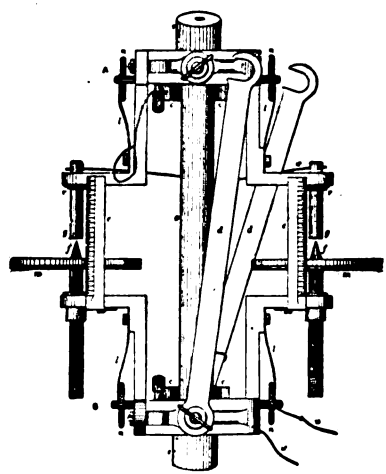

FIG. 74.—THE HENNING MICROMETER.

before stress is applied to the specimen. The micrometer is connected to an electric bell in the same manner as the Thurston extensometer.

*Henning's Mirror Extensometer.**—In 1896 Gus. C. Henning designed a mirror extensometer differing in several particulars from that of Bauschinger. The instrument is intended for accurate measurements of the extension or compression on both sides of the test-piece within the elastic limit, and is said to fulfil the following conditions: (*a*) It is applicable for measures of extension or compression. (*b*) Readings in either direction, negative or positive, can be taken without interruption or adjustment. (*c*) The instrument is free from changes of shape during the test. (*d*) There is neither slip nor play of the working parts.

* See Transactions American Society Mechanical Engineers, vol. XVIII.

The instrument consists of two parts; the first is a telescope provided with levelling-screws, mounted on a horizontal and vertical axis and furnished with supports for two linear scales, which may be arranged so that the reflection will show in mirrors attached to the specimen. The second part consists of a frame which can be fastened to the test-specimen near one end by opposite-pointed screws, and which is connected to spindles carrying the mirrors by spring side-bars. A portion of each mirror-spindle is double knife-edged, and when adjusted

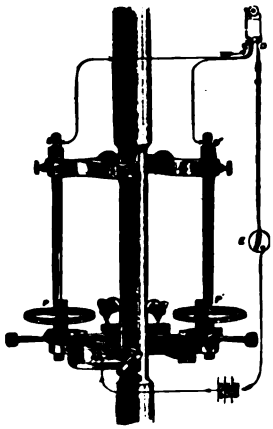

FIG. 75.—THE MARSHALL EXTENSOMETER

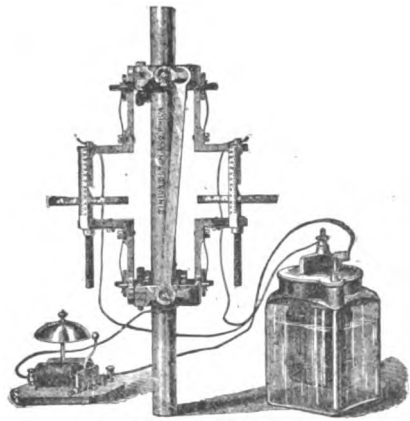

FIG. 76.— IENNING'S EXTENSOMETER.

is brought in contact on one side with the test-piece, and on the other with the spring side-bar. The elongation of the test-piece causes an angular motion of the mirror, which in turn causes a multiplied motion of the reflection of the scale as seen from the telescope. The mirrors are so arranged that the reflections from both scales can be seen continually and without adjustment of the telescope, and the apparatus as a whole has fewer parts and is more readily adjusted than the Bauschinger. It is limited to a total elongation of about 0.04 inch and hence is accurate only for measurements within the elastic limit.

84. The Marshall Extensometer.—This extensometer, shown in Fig. 75, is the latest design of the late Mr. C. A. Marshall. Its principal difference from the Thurston exten-

someter is in the convenient form of clamps, which are well shown in the cut, and in the spring apparatus for steadying the lower part.

The micrometer-screw used with this instrument has a motion of only one inch. When the motion exceeds the range of the micrometer-screws, the movable bars BP, $B'P'$ are changed in position, and a new series of readings taken with the micrometer screw. To facilitate the change of position of these bars, and allow the micrometer-screw to return to zero at each change, the arrangement shown in Fig. 77 is adopted, which consists of a nut to which is attached a slotted taper-screw, on which screws a second nut, which serves to clamp the lower nut to the bar; by turning the lower nut when clamped, the desired adjustment can be made.

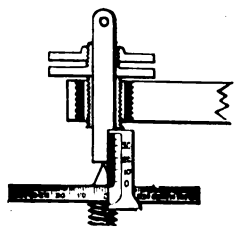

FIG. 77.

The following are the directions for use:

Run wire (Fig. 76) from one terminal of battery to lower clamp at A, from B and B' to binding-post C on the electric bell, from the other binding-post marked D to switch E, and from there back to the other terminal of battery.

To measure strain, screw up micrometer-screws at P and P' until each of them makes connection and bell rings; then take the readings on both sides.

85. Boston Micrometer Extensometer.—This instrument consists, as shown in Fig. 78, of the graduated micrometer-screw, reading in thousandths up to one inch, and having pointed extension-pieces attached, for gauging the distance between the small projections on the collars fastened to the specimen at the proper distance. These collars are made partly self-adjusting by the springs which help to centralize them. They are then clamped in place by means of the pointed set-screws on the sides, and measurements are made between the projections on opposite sides of the specimen and compared, to denote any changes in shape or variations in the two sides.

The Brown and Sharpe micrometer can readily be used with similar collars, thus forming an extensometer; the accuracy of this form is considerably less than those in which the micrometers are fixed, but it will, however, be found with careful handling to give good results.

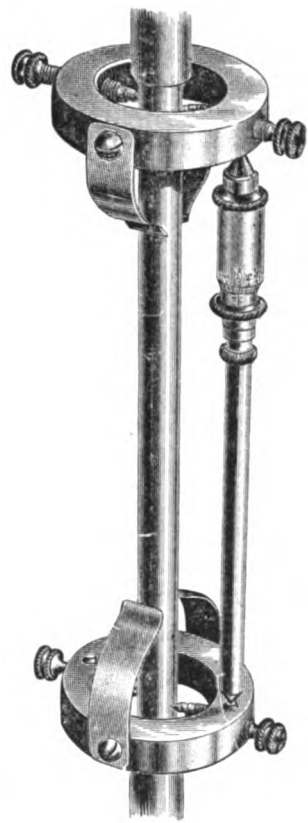

FIG. 78.

Of the various extensometers described, the Paine, Buzby, Marshall, and Riehlé are manufactured by Riehlé Bros., Philadelphia; the Thurston, by Olsen of Philadelphia; the others, by the respective designers.

86. Combined Extensometer and Autographic Apparatus.—An extensometer designed by the author, and quite extensively used in the tests of materials in Sibley College, is shown in Fig. 80 in elevation and in Fig. 81 in plan. In this extensometer micrometers of the kind shown in Fig. 22, Article 42, p. 60, with the addition of an extension-rod for holding, are used. This rod sets into a socket A, which holds the micrometer in position. Readings are taken on the thimble B, as explained on p. 52. Connections are made with bell and battery at m, n, and m', n', so that contact of the micrometer-screws is indicated by sound. The construction of the clamping device is fully shown in the plan view, Fig. 81.

The principal peculiarity of this extensometer consists in the addition of four pulleys, C_1, C_2, C_3 and C_4, which are arranged so that a cord ab can be fastened at C_3 and passed down and around the pulley C_1, thence over the guide-pulley W, Fig. 81, to pulley C_2, thence over the pulley C_4, and thence to a paper

drum. It is at once evident that any extension of the specimen *SS'* will draw in the free end of the cord at twice the rate of the extension; moreover, any slight swinging or rocking of the extensometer head will produce compensating effects on the length of the cord. By connecting the free end of the cord to a drum, the drum will be revolved by the stretch

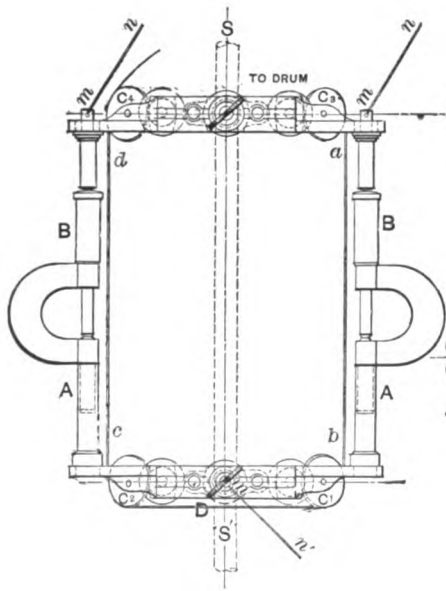

FIG. 80.

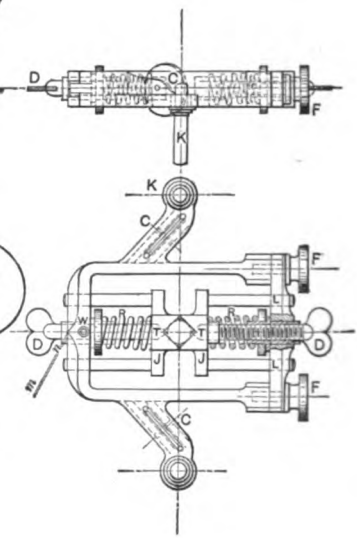

FIG. 81.

of the specimen. As this work may be done against a fixed pull, there may be a uniform tension on the cord so that the motion of the drum would be uniform and proportional to the stretch. A pencil is moved along the axis of the drum proportional to the motion of the poise.

An autographic device constructed in this way has given excellent diagrams, and in addition has served as an extensometer for accurate measurements of strain within the elastic limits. Wire has been used to connect extensometer to drum in place of the cord with success. A suggested improvement is

to rotate the drum by the motion of the poise, and to move the pencil by the stretch of the material, using two pencils, one of which is to move at a rate equal to fifty times the strain, the other at a rate equal to five times the strain; thus producing two diagrams—one on a large scale, for use in determining the strains during the elastic limit; the other on a small scale, for the complete test.

87. Deflectometer for Transverse Testing.—Instruments for measuring the deflection of a specimen subjected to transverse stress are termed *deflectometers.*

The deflectometer usually used by the author consists of a light metal-frame of the same length as the test-piece, and arched or raised sufficiently in the centre to hold a micrometer of the form used in the extensometer described in Article 86, above the point to which measurements are to be taken. In using the deflectometer it is supported on the same bearings as the test-piece, and measurements made to a point on the specimen or to a point on the testing-machine which moves downward as the specimen is deflected. This instrument eliminates any error of settlement in the supports. A steel wire is sometimes stretched by the side of the specimen, and marks made on the specimen showing its original position with reference to the wire. The deflection at any point would be the distance from the mark on the specimen to the corresponding point on the wire. The cathetometer, see Article 43, page 63, is very useful in determining the deflection in long specimens. The deflection is often measured from a fixed point to the bottom of the specimen, thus neglecting any error due to the settlement of the supports. One of the most useful instruments of this kind is made by Riehlé Bros., and is shown, together with the method of attachment, in Fig. 82.

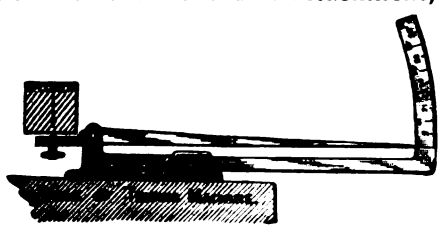

FIG. 82.

CHAPTER V.

METHODS OF TESTING MATERIALS OF CONSTRUCTION.

Standard Methods. — The importance of standard methods of testing material can hardly be overestimated if it is desired to produce results directly comparable with those obtained by other experimenters, since it is found that the results obtained in testing the strength of materials are affected by methods of testing and by the size and shape of the test-specimen. To secure uniform practice, standard methods for testing various materials have been adopted by several of the engineering societies of Germany and of the United States, as well as by associations of the different manufacturers. The general and special standard methods adopted by these associations form the basis of methods described in this chapter.

88. Form of Test-pieces.—The form of test-pieces is found to have an important bearing on the strength, and for this reason engineers have adopted certain standard forms to be used. The form recommended by the Committee on Standard Tests and Methods of Testing, of the American Society of Mechanical Engineers is as follows:*

"Specimens for scientific or standard tests are to be prepared with the greatest care and accuracy, and turned according to the following dimensions as nearly as possible. The tension test-pieces are to have different diameters according to the original thickness of the material, and to be, when expressed in English measures, exactly 0.4, 0.6, 0.8, and 1.0 inch in diameter; but for all these different diameters the angle, but

* See Vol. XI. of Transactions.

not the length, of the neck is to remain constant. This neck is a cone, not a fillet connecting the shoulders and body. The length of the gauged or measured part to be 8 inches, of the cylindrical part 8.8 inches. The length of the coned neck to be $2\frac{1}{2}$ times the diameter, increasing in diameter from the cylindrical part to $1\frac{1}{2}$ times the cylindrical part. The shoulders to have a length equal to the diameter, and to be connected with a round fillet to a head, which has a diameter equal to twice that of the cylinder, and a length at least $1\frac{1}{2}$ the diameter.

Fig. 83 shows the form of the test-piece recommended for tension; the numbers above the figure give dimensions in

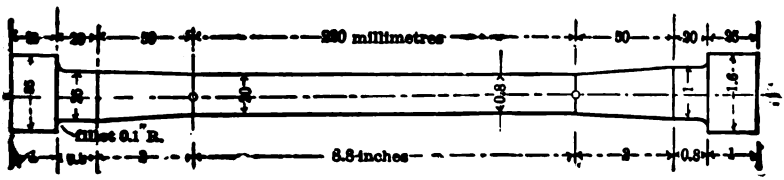

FIG. 83.—STANDARD TEST-PIECE IN TENSION.

millimeters, those below in inches. For *flat test-pieces* the shape as shown in Fig. 84 is recommended: such specimens

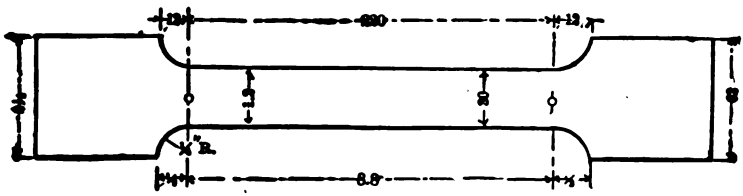

FIG. 84.—TEST-PIECE FOR FLAT SPECIMENS.

are to be cut from larger pieces; the fillets are to be accurately milled, and the shoulders made ample to receive and hold the full grip of the shackles or wedges.

The length for rough bars is to remain the same as for finished test-pieces, but the length of specimen from the gauge-mark to the nearest holder is to be not less than the diameter

of the test-piece if round, or one and a half times the greatest side if flat.

For commercial testing the standard form cannot always be adhered to, and no form is recommended.*

It is recommended in all cases that the specimens be held by true bearing on the end shoulders, as gripping or holding devices in common use produce undesirable effects on the cylindrical portion of the specimen.

The forms of test-specimens which have been heretofore used are somewhat different from the standards recommended. These forms are shown in Fig. 85, No. 1 to No. 5, and are as follows:

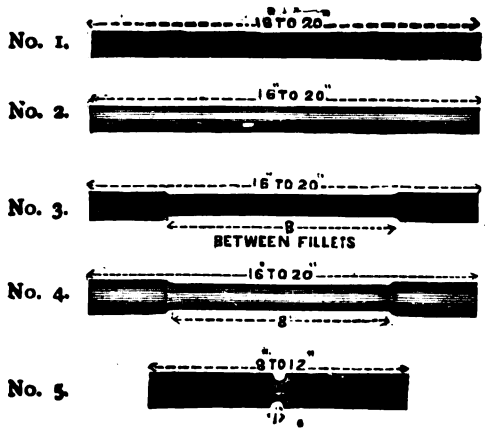
No. 1.
8 TO 20
No. 1. Square or flat bar, as rolled.
No. 2.
16 TO 20
No. 2. Round bar, as rolled.
No. 3.
16 TO 20
8
BETWEEN FILLETS
No. 3. Standard shape for flats or squares. Edges must be smooth and true. Fillets, one half inch radius. Specimens not over three inches wide.
No. 4.
16 TO 20
8
No. 4. Standard shape for rounds.
No. 5.
8 TO 12
No. 5. Government shape for marine-boiler plates only. Not in general use, as it gives too high a test.

FIG. 85.—FORMS OF SPECIMEN FOR TENSILE STRAINS FORMERLY USED.

89. Test-pieces of Special Materials.—*Wood.*—Wood is a difficult material to test in tension, as the specimen is likely to be crushed by the shackles or holders. The author has had fairly good success with specimens, made with a very large bearing-surface in the shackles, of the form shown in Fig. 84,

* A discussion of the effect of varying proportion of test-pieces is given in Thurston's "Text-book of Materials," pages 356–7.

page 137 for flat specimens, but with the breadth of the shoulders or bearing-surfaces increased an amount equal to one half the diameter of the specimen over that shown in Fig. 84.

Cast-iron.—Cast-iron specimens of the usual or standard forms are very likely to be broken by oblique strains in tension tests much before the true breaking-point has been reached. To insure perfectly axial strains Riehlé Bros. propose a form of specimen shown in Fig. 86, *A*, *B*, and *C*, cast with an enlarged

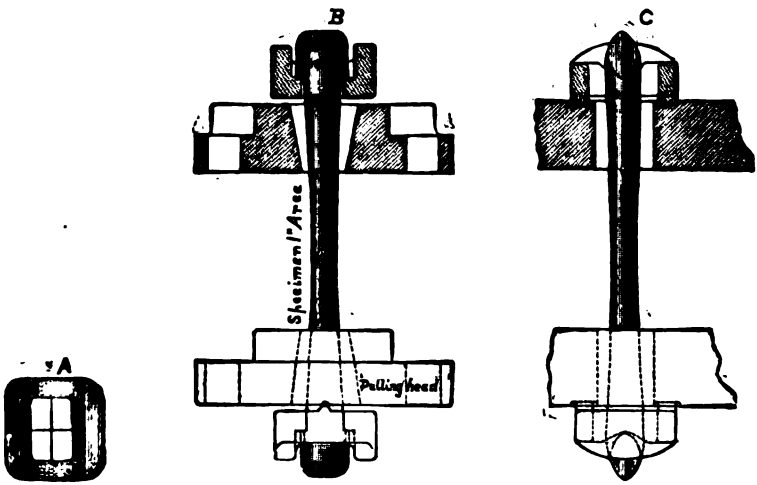

FIG. 86.—PROPOSED FORM FOR CAST-IRON SPECIMENS.

head, the projecting portion of which, as shown in *C*, has a knife-edge shape. The specimen is carried in holders or shackles, *A* and *B*, which rest on knife-edges extending at right angles to those of the specimen. This permits free play of the specimen in either direction, and renders oblique strains nearly impossible.

Chain.—In the case of chain, large links are welded at the ends, as shown in Fig. 87; these are passed through the heads of the testing-machine and held by pins.

FIG. 87.—CHAIN TEST-PIECE.

Hemp Rope.—A similar method is used in testing hemp rope, the specimen being prepared as shown in Fig. 88.

FIG. 88.—ROPE TEST-PIECE.

Special hollow conical shackles have also been used for holding the rope with success.

Wire Rope.—Wire-rope specimens may be prepared as shown in Fig. 89, or they may be prepared by pouring a mass

FIG. 89.—WIRE-ROPE TEST-PIECE.

of melted Babbitt metal around each end and moulding into a conical form, taking care that the rope is in the exact centre of the metal.

Cement.—Cement test-pieces for tension are made in moulds and permitted to harden for some time before being tested. It is found that the strength is affected by the form of the speci-

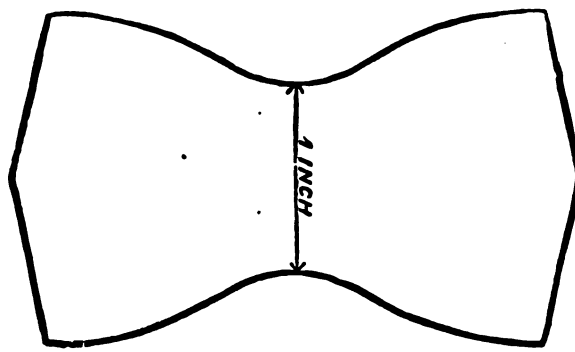

FIG. 90.—OLD C. E. STANDARD SPECIMEN FOR CEMENT.

men, by the amount of water used, and by the method of mixing the cement. To get results which may safely be compared, it is necessary to have the test-specimens or briquettes of exactly the same form, and pulled apart in shackles or holders

which exert no side strain whatever, and the strain applied uniformly and without any jerky motion. Various standard forms of briquettes have been employed; the one most used in America prior to 1904 is shown full size in Fig. 90. That recently adopted is shown half size in Fig. 94.

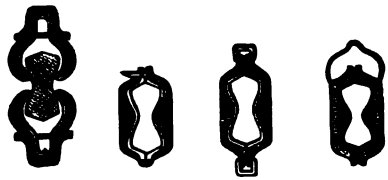

FIG. 91.—CEMENT MOULDS AND BRIQUETTES.

The form of the mould for making the briquettes, and the holders or shackles generally used, are shown in Figs. 91 to 93.

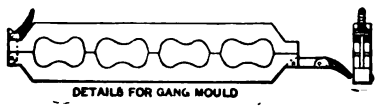

FIG. 92.

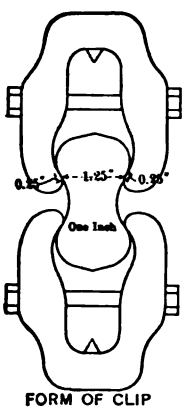

FIG. 93.

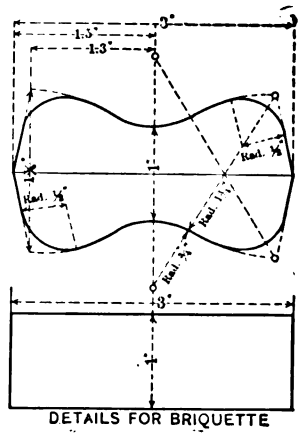

FIG. 94.

STANDARD CLIP AND BRIQUETTE ADOPTED BY THE AMERICAN SOCIETY FOR TESTING MATERIALS, 1904.

The gang-mould, as shown in Fig. 92, consisting of several moulds united in one construction, is preferred when numerous briquettes are to be made.

Standard revised specifications for testing cement were adopted by the American Society of Civil Engineers and approved by the American Society of Testing Materials, 1904. The form of briquette adopted is shown in Fig. 94, which differs from the earlier form principally in the use of rounded instead of sharp corners, as noted by comparing Figs. 90 and 94.

90. Compression-test Specimens—Test-pieces.—Test-pieces are in all cases to be prepared with the greatest care, to make sure that the end surfaces are true parallel planes normal to the axis of the specimen.

1. *Short Specimens.*—The standard test specimens are to be cylinders two inches in length and one inch in diameter, when ultimate resistance alone is to be determined.

2. *Long Specimens.*—For all other purposes, especially when the elastic resistances are to be ascertained, specimens one inch in diameter and ten or twenty inches long (see No. 2, Fig. 85) are to be used. Standard length on which strain is to be measured is to be eight inches, as in the tension-tests. Greatest care must be taken in all cases to insure square ends and that the force be applied axially.

The specimens are to be marked and the compression measured as explained for tension-test pieces, page 126.

91. Transverse-test Specimens. — For standard transverse tests, bars one inch square and forty inches long are to be used, the bearing blocks or supports to be exactly thirty-six inches apart, centre to centre. For standard or scientific tests of cast-iron, such bars are to be cut out of a casting at least two inches square or two and a quarter inches in diameter, so as to remove all chilling effect. For routine tests, bars cast one inch square may be used, but all possible precautions must be taken to prevent surface-chilling and porosity.

Test-bars of wood are to be forty inches in length, and three inches square in section.

92. Torsion-test Specimens. — For standard tests, cylindrical specimens with cylindrical concentric shoulders are to be used; the two are connected by large fillets. The specimen

is to be held in the chuck or heads of the machine by three keys, inserted in key-ways $\frac{1}{8}$ inch deep, cut in the shoulder.

93. **Elongation—Fracture.**—The character of the fracture often affords important information regarding the material. The structure of the fractured surface should be described as coarse or fine, either fibrous, granular, or crystalline. Its form, whether plane, convex, or concave, cup-shaped above or below, should in each case be stated. Its location should be accu-

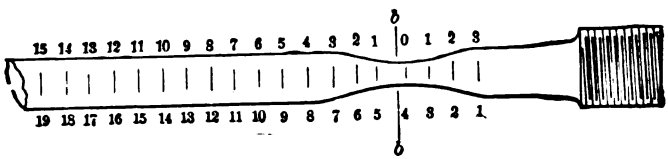

FIG 95.

rately given, from marks on the specimen one half inch or less apart. The reduction of diameter which accompanies fracture should be accurately measured. Accompanying the report should be a sketch of the fractured specimen.

Fracture occurs usually as the result of a gradual yielding of the particles of the specimen. The strain, so long as the stress is less than the maximum load, is distributed nearly uniformly over the specimen, but after that point is passed the distortion becomes nearly local; a rapid elongation with a corresponding reduction in section is manifest as affecting a small portion of the specimen only. This action in materials with sensible ductility takes place some little time before rupture; in very rigid materials it cannot be perceived at all. This peculiar change in form is spoken of as "necking."

The drawing Fig. 95 shows the appearance of a test specimen in which the "necking" is well developed. Rupture occurs at *b—b*, a point in the neck which may be near one end of the specimen.

In order to measure the elongation of the specimen fairly, a correction should be applied, so that the reduced elongation shall be the same as though the stretch either side of the point

of rupture were equal. This can only be done by dividing up the original specimen into equal spaces, each of which is marked so that it can be identified after rupture.

Supposing that twenty spaces represent the full length between gauge-marks: then if the rupture be nearest the mark 0, Fig. 95, three spaces from the nearest gauge-mark, the total length to compare with the original length is 0 to 3 on the right, plus 0 to 10 on the left, plus the distance 3 to 1 on the left. These spaces are to be measured, and the sum taken as the total length after rupture. The stretch is the difference between this and the original length; the per cent of stretch, or elongation, is the stretch divided by the original length. This method is stated in a general form as follows:

Divide the standard length into m equal parts, and represent the number of these parts in the short portion after rupture by s. Note two points in the long portion, A and B, at s and $\frac{1}{2}m$ divisions respectively from the break. Lay the parts together, and measure from the gauge-mark in the short portion to point A. This distance increased by double the measured distance from A to B gives the total length after rupture. Subtract the original length to obtain the total elongation: thus the elongation of the standard m parts will be obtained as though the fracture were located at the middle division.

94. Strain-diagrams.—The results of measurements of the strain should be represented graphically by a curve termed a *strain-diagram.*

Strain-diagrams are drawn (see Art. 46, page 70) by taking the loads per square inch (p) as ordinates, and the relative stretch or strain (ϵ) to a suitable scale as abscissæ. The curve so formed will be a straight line from the origin to the elastic limit, and the tangent of the angle that it makes with the axis of X ($p \div \epsilon = E$) will be proportional to the modulus of elasticity. The area included between the axis of X and that portion of the curve preceding the elastic limit will represent the Elastic Resilience or work done by the resistance of the material to that point.

Autographic Strain-diagrams are drawn automatically on a revolving drum. In most machines the drum is revolved by the stretch of the material and a pencil is moved parallel to its main axis and proportional to the motion of the weighing poise, although in some devices for drawing autographic diagrams the drum is actuated by the poise motion, the pencil by the stretch. The Olsen autographic apparatus is described in Article 71, Figs. 56 to 60, page 111. This apparatus is very perfect in all its details, and produces a diagram similar to that shown in Fig. 96.

The ordinates on this diagram are proportional to the load, the abscissæ to the strain. The lines are straight and nearly vertical until the yield-point; then for a time the strain rapidly increases, with little increase of stress as shown by the line of stress; this is followed by an increase of both stress and strain, until the point of maximum loading is reached. After passing the elastic limit the strain increases very rapidly, the stress but little.

The autographic attachment is a valuable addition to a testing-machine, especially if its use does not interfere with the measurement by micrometers; but if the scale of the diagram does not exceed five or ten times that of the actual strain, it is of value only in showing the general character of the strain, and is not to be considered of value in obtaining coefficients or moduli within the elastic limit.

TENSION TESTS.

95. Objects of Tension Tests.—Tension tests are considered valuable as affording information of the qualities of material, and a certain tensile strength is required of nearly all materials used, even though in practice they may be subjected to different kinds of strain. The breaking-strength is frequently specified within limits, and is to be accompanied with a certain amount of ductility.

Directions for Tension Tests.—Examine the test-piece care-

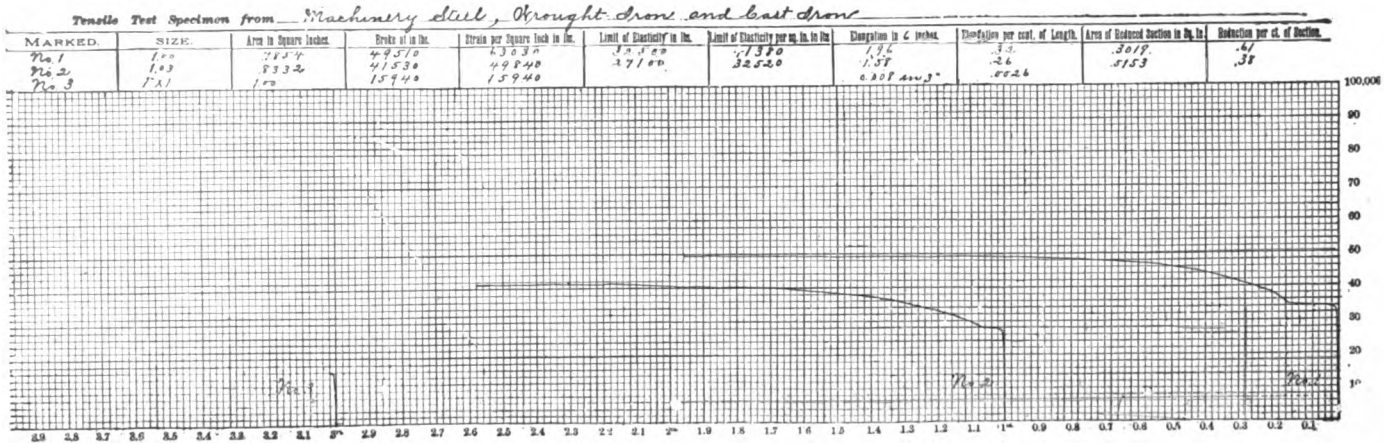
Tensile Test Specimen from Machinery Steel, Wrought Iron and Cast Iron
MARKED. | SIZE. | Area in Square Inches. | Broke at in lbs. | Strain per Square Inch in lbs. | Limit of Elasticity in lbs. | Limit of Elasticity per sq. in. in lbs | Elongation in 6 inches. | Elongation per cent. of Length. | Area of Reduced Section in Sq. In. | Reduction per ct. of Section.
No 1 | 1.00 | .7854 | 49510 | 63030 | 30500 | 38130 | 1.96 | .33 | .3019 | .61
No 2 | 1.03 | .8332 | 41530 | 49840 | 27100 | 32520 | 1.58 | .26 | .5153 | .38
No 3 | 1.21 | 1.03 | 15940 | 15940 | | | 0.30 in 3" | .0026 |
100,000
90
80
70
60
50
40
30
20
10
No 3
No 2
No 1

FIG. 96.—AUTOGRAPHIC STRAIN-DIAGRAM.

fully for any flaw, defect, irregularity, or abnormal appearance, and see that it is of correct form and carefully prepared. Indentations from a hammer often seriously affect the results. In wood specimens, abrasions, slight nicks at the corners, or bruises on the surface will invariably be the cause of failure.

Next, carefully measure the dimensions, record total length, gauge-length (or length on which measurements of strains are made), also form and dimensions of shoulders. Divide the specimen between the gauge-marks into inches and half inches, which may be marked with a special tool, or by rubbing chalk on the specimens and marking each division with a steel scratch.

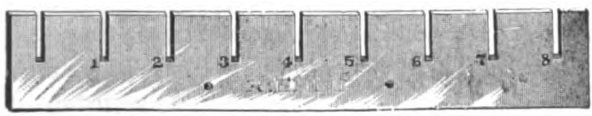

FIG. 97.—LAYING-OFF GAUGE.

A special gauge as shown in Fig. 97 is convenient for this purpose. These marks serve as reference points in measuring the elongation after rupture, and this elongation should be measured, not from the centre of the specimen, but from the point of rupture either way, as explained in Art. 93, page 143.

See that the testing-machine is level and balanced before each test; insert the specimen in a truly axial position in the machine by measuring carefully its position in two directions, and by applying a level. Calculate from the known coefficients of the material the probable load at elastic limit. Take one tenth of this as the increment of load. The Committee on Standard Tests, American Society of Mechanical Engineers, recommend that the increment be one half or one third that of the probable load at the elastic limit, thus giving larger strains but fewer observations. Apply one increment of load to the specimen before measurements of elongation are made, since by loading specimens up to 1000 or 2000 pounds per square inch the effect of initial errors, such as occur generally at the commencement of each test, are lessened. The auxiliary apparatus

adjusts itself somewhat during this period of loading, and the specimen assumes a true position should any slight irregularity exist.

96. Attachment of Extensometer.—Attach the auxiliary apparatus for measuring stretch, or obtaining autographic diagrams. The method of attaching extensometers will depend on the special form used (see Articles 80 to 86), but this act should always be carefully performed, and the specimen exactly centred in the extensometer, and the gauge-points arranged 8 inches apart. The following directions for applying and using the Henning extensometer will serve to show the method to be used in all cases.

The Henning extensometer (see Article 83, Fig. 74, page 130) is attached and used as follows: Before attaching the instrument, adjust the knife-edges in the clamps by means of the two milled nuts so that they are equally distant from the frame and not so far apart as the diameter of the test-piece. Then, since the springs acting on the knife-edges are of equal strength, the instrument will adjust itself in the plane of the screws symmetrically with respect to the test-piece. Advance or withdraw the set-screws until their points are equally distant from the frame and far enough apart to admit the test-piece.

Separate the upper portion of the instrument, put it around the test-piece (already inserted in the machine) near the upper shoulder, with the smaller part to the right, force together and fasten securely. Advance the set-screws simultaneously until their points indent the test-piece. Separate the lower portion, put it around the test-piece with the vertical scales to the front, force together and secure. Hang the links on the proper bearings on both portions of the instrument. Then advance the set-screws as above. Throw the links out, take readings of the micrometers, apply the first increment of load, and proceed with the test as directed. To read the micrometers make the electrical connections; advance one micrometer until the bell rings announcing contact, back off barely enough to stop ringing, and advance the other until the bell rings. Back off as

before, and read both micrometers. The vertical scale and the micrometer head are graduated so that readings to $\frac{1}{10000}$ inch can be obtained directly.

97. Tension Test.—The test is made by applying the stress continuously and uniformly without intermission until the instant of rupture, only stopping at intervals long enough to make the desired observations of stretch and change of shape. The stress should at no time be decreased and re-applied in a standard test, but should be maintained continuously. The auxiliary apparatus for measuring strain must be removed before rupture takes place, except it is of a character not likely to be injured. It should usually be taken off very soon after the elastic limit is passed; although for ductile material it may be left in place for a longer time after the elastic limit has been passed than for hard and brittle materials. The material is then to be loaded until fracture takes place, keeping the beam floating, after which the distortion for each part is to be measured by comparison with the reference divisions on the test-piece, measured from the point of rupture as previously explained. It is to be noted that measurements within the elastic limit are of especial importance, since materials in use are not to be strained beyond that point.

98. Report.—Remove the fractured piece from the machine; make measurements of shape, external and fractured surface; give time required in making the test.* When fracture is cup-shaped, state the position of cup—whether in upper or lower piece.

In recording the results of tests, loads at elastic limit, at yield-point, maximum, and instant of rupture are all to be noted.

The load at elastic limit is to be that stress which produces a change in the rate of stretch.

The load at yield-point is to be that stress under which the rate of stretch suddenly increases rapidly.

---

*See Report of Committee on Standard Tests, Vol. XI., Am. Society Mech. Engrs.

The maximum load is to be the highest load carried by the test-piece.

The load at instant of rupture is not the maximum load carried, but a lesser load carried by the specimen at the instant of rupture.

In giving results of tests it is not necessary to give the load per unit section of reduced area, as such figure is of no value: (1) because it is not always possible to obtain the load at instant of rupture; (2) because it is generally impossible to obtain a correct measurement of the area of section after rupture; (3) lastly, because the amount of reduction of area is principally dependent upon local and accidental conditions at the point of rupture. The modulus or coefficient of elasticity is to be deduced from measurements of strain observed between fixed increments of load per unit section; between 2000 pounds per square inch and 12,000 pounds per square inch; or between 1000 pounds per square inch and 11,000 pounds per square inch. With this precaution several sources of error are avoided, and it becomes possible to compare results on the same basis.

In the report describe the testing-machine and method of testing, form and dimensions of specimen, character and position of rupture. Calculate coefficients of elasticity, maximum strength, breaking-strength, strength at elastic limit, and resilience, and submit a complete log of test. Also, draw a strain-diagram on cross-section paper; make a sketch of surface of rupture. The curve of stress and strain is to be drawn as follows: Plot a curve of stress and strain up to a point beyond the elastic limit, using for ordinates values of p, on the scale 1 div. = 2000 lbs. per sq. in., and for abscissæ values of ϵ, on the scale 1 div. = 0.0001″; compute E and p. Then plot the complete curve of stress and strain to the point of rupture, using scales of 1 div. = 10,000 lbs. per sq. in., and 1 div. = 0.01 inch for ordinates and abscissæ, respectively.

A blank form for the log is shown below, which is to be filled out and filed. On this log is to be entered, value of the

modulus of elasticity, load at elastic limit, character of rupture, area of least section, and measurements between each mark made on the specimen.

The following form is used by the author for both tension and compression tests:

Test of.....by.....
Kind of Test.....
Material from.....
Machine used..... Date.....189
Time of Testing.....min. Tempt.....degrees F.

No.	Load.		Micrometer-readings.			Extension.			Modulus Elasticity. E
	Actual. P	Per sq. in. p	I	II	Mean.	Actual. λ	Difference. $\Delta\lambda$	Per in. ϵ	

Original length..... .....in. Diameter.....in. Area.....sq. in.
Final " .....in. Diameter.....in. Area. ..... "
Form of section..... Fracture: position.....; character.....
Moduli: resilience..... .....; breaking-strength.....
Load per sq. inch: elastic limit..... max..... breaking.....
Equivalent elongation for 8 inches.....inches.....per cent.
Elongation..... Reduction area.....per cent. Local elongation each half-inch, from top, 1st.....; 2d.....; 3d .....; 4th.....; 5th.....; 6th.....; 7th.....; 8th.....; 9th.....; 10th.....; 11th.....; 12th ...; 13th.....; 14th.....; 15th.....; 16th..... .. ..

The following form, from Vol. XI. Trans. American Society Mech. Engineers, is excellent for reporting the principal results of a series of tests. Attention is called to the full descriptions accompanying the report.

REPORT OF TENSION-TESTS FOR THE AMERICAN SOCIETY OF MECHANICAL ENGINEERS.

By C. A. Marshall, in charge of Testing Laboratory of Cambria Iron Co., Johnstown, Pa.

Testing-machine built by ..... *When procured*, about 1880. *Maximum capacity*, 100,000 lbs. *How driven*, gearing drives nut on screw of lower head. *Position of specimen* (*horizontal or vertical*), vertical.

1	2	3	4	5	6	7	8	9	10	11	12	13	14	15	16	Remarks.
No. or mark of specimen.	Kind of material.	Form of specimen.	Dimensions before test.		Length between grips or jaws when starting test.	Length between gauge-marks.			Minimum section at elastic limit.	Minimum section after fracture.	Distance of point of fracture from nearest end of specimen.	Stress in lbs.			Duration of test.	
			Total length.	Section.		When starting test.	At elastic limit while under strain.	After rupture.				At elastic limit.	Maximum observed.	At time of rupture.		
			in.	in.	in.	in.	in.	in.	....	in.	....	.....	.....	.. ..	.....	
Iron, 2394	.....	....	...	....	...	..	.....	.....	....	.....	....	.....	.....	.. ..	.....	Tested on Emery 300,000-lb. machine.
Iron, 2395	Cold Rolled Iron.	¾″ Rd. Straight.	17	.748 diam.	9	8.00	8.017425	8.87	....	0.555 diam.	¼″ from 8″ mark.	25960	34035	.....	52 min.	Fracture, silky fibrous. See detail sheet.
Iron, 2396	Cold Rolled Iron.	¾″ Rd. Straight.	17	.748 diam.	9	8.00	8.017300	8.54	....	.....	Outside marks.	25960	34580	28000	30 min.	Fracture, silky fibrous. See detail sheet.
Steel, 2397	Cold Rolled Steel.	¾″ Rd. Straight.	17	.749 } mean .748 } .7485	9	8.01	8.026600	9.02	....	0.488 diam.	4″ from 8″ mark.	25.80	32800	25000	29 min.	Fracture, ¾ cup. Fine silky. See detail sheet
Steel, 2398	Cold Rolled Steel.	¾″ Rd. Straight.	17	.752 } = .750 .748 }	9	8.01	8.028275	8.50	....	0.531 diam.	¼″ outside 8″ mark.	28288	35600	28000	34 min.	Silky edges, dull, with specks crystalline. See detail sheet.
Steel, 2399	Cold Rolled Steel.	¾″ Rd. Straight.	17	.749 } = .748 .747 }	9	8.00	8.019600	8.58	....	0.478 diam.	Exactly at 8″ mark.	30800	36250	25200	30 min.	Full cup, fine silky. See detail sheet.

Prof. G. Lanza of the Massachusetts Institute of Technology uses the following forms for log and report of tension-tests :

TENSION-TEST.

No..... Date.....
Specimen.....
Length between clamps..... ..... Tested by.....
Original section.....

	Loads.		Micrometer-readings.				Mean.	Differences.		Remarks.
	Actual.	Per sq. in.	1	2	1	2		Actual.	Per inch.	

Fractured section..... Breaking-stress per sq. in. fractured section.....
Reduction of area of cross-section..... Modulus of elasticity.....
Ultimate extension... ..... Modulus of elastic resilience.....
Cross-section at maximum load..... Modulus of ultimate resilience.....
Tensile limit per sq. in ....

REPORT.

No..... ..... Date.....
Specimen.....
Length between clamps, ...
Original section, ...
Elastic limit, ...
Breaking-load, ...
Fractured section, ...
Reduction of area of cross-section, ...
Ultimate extension, ...
Breaking-stress per square inch fractured section, ...
Modulus of elasticity, ...
Signed..... .....

COMPRESSION-TESTS.

99. Methods of Testing by Compression. 1. *Short Pieces: Method of Testing.*—In case of short pieces, measurements of strain cannot be made on the test-piece itself, but must be made between points on the heads of the testing-machine. It is necessary to ascertain and make a correction for the error due to the yielding of the parts of the testing-machine. This is done as follows: Lower the moving-head until the steel compression-plate presses on the steel block in the lower platform with a force of about 500 pounds. Attach the micrometers to the special frame, which is supported by the upper platform, and read to a point on the movable head. With load at 500 pounds, read both micrometers. Apply loads by increments of 1000 pounds up to three fourths the limit of the machine, taking corresponding readings. Plot a curve of loads and deflections with ordinates 1 long division = 1000 pounds, and abscissæ 1 long division = 0.001 inch. From this curve obtain corrections for the deflections caused by the loads used in the compression-test. In making the test calculate the increment of load as explained for tensile strain, Article 98. Conduct the experiment in the same manner as for tension, except that the stress is applied to compress instead of to stretch the specimen. If the material tested is hard or brittle, as in cast-iron, care should be taken to protect the person from the pieces which sometimes fly at rupture.

Report and draw curve as for tension-tests, and in addition show why brittle material breaks in planes, making angles of about 45° with the axis of the piece; compare the results obtained for wrought-iron in compression with those obtained in tension.

2. *Long Pieces: Method of Testing.*—In this case the extensometers used for tension-tests can be connected directly to the specimen, and the measurements taken in substantially the same way, except that the heads of the extensometer will approach instead of recede from each other; this makes it

necessary to *run the screws back each time after taking a measurement* a distance greater than the compression caused by the increment of load. In case large specimens are tested horizontally, initial flexion is to be avoided by counterweighting the mass of the test-piece.

Calculate the increment of load as one tenth the breaking-load given by Rankine's formula, Article 51, page 74. Apply the first increment and take initial reading of micrometers; continue this until after the elastic limit has been passed, after which remove the extensometer, and apply load until rupture takes place. Protect yourself from injury by flying pieces. Compute the breaking coefficient C by Rankine's formula, and compare with the usual results.

Compute the modulus of elasticity by Euler's formula:

(1) $P_{\bullet}'' = EI\pi^2 \div l''^2$ (Church, "Mechanics of Materials," p. 366).
(2) $E = l''^3 P_{\bullet}'' \div \pi^2 I$. $l'' = l - \lambda''$. (3) $E = (l - \lambda'')^3 P' \div \pi^2 I$.

Also by the method used in testing short specimens.

In the above approximate formula the notation is the same as in Article 48, page 72.

Note in the report, load at elastic limit, yield-point, and ultimate resistance, as well as increase of section at various points, and total compression calculated as explained for tension.

Submit a strain-diagram, and follow the same general directions as prescribed in the report for tensile strain, Article 98.

TRANSVERSE TESTS.

100. Object.—This test is especially valuable for full-sized pieces tested with the load they will be required to carry in actual practice.

The deflections of such pieces, with loads at centre or in various other positions, afford means of computing the coefficients of elasticity and the form of the elastic curve.

Method of Testing.—Arrange the machines for such tests

by putting in the supporting abutments, and by arranging the head for such tests, or else by using the special transverse testing-machine.

In this experiment the test-piece is usually a prismatic beam, 3 feet long (see Article 91, page 142), and it is supported at both ends, the stress being applied at the centre. The same data are required to be observed as in the preceding experiment, viz., loads and deflections, or stresses and corresponding strains.

Sharp edges on all bearing-pieces are to be avoided, and the use of rolling bearings which move accurately with the angular deflections of the ends of the bars are recommended; otherwise the distance between fixed supports measured along the axis of the specimen is continually changing.

Place the test-bar upon the supports, and adjust the latter 36 inches apart between centres, and so that the load will be applied exactly at the middle. Obtain the necessary dimensions, and calculate the probable strength at elastic limit and at rupture by means of the formula $p = Wle \div 4I$. (See Article 52, page 78.) Adjust the specimen in the machine in a horizontal plane, and apply the stress at the centre normal to the axis of the specimen, and in a plane passing through the three points of resistance.

Measure the deflections at the centre from a fixed plane or base, allowing for the settling of the supports, or by the special deflectometer (see Article 87, page 135), from which compute the coefficient of resilience and the modulus of elasticity.

Balance the scale-beam with the test-bar in position and the deflectometer lying on the platform. Set the poise for one increment of load and apply stress until the beam tips. Place the poise at zero, and balance by gradually removing the load. Place the deflectometer in position on the supports, and with the micrometer at zero make contact and record zero-reading and zero-load.

Apply the load in uniform increments equal to about one fifth the calculated load for the elastic limit, stopping only

long enough to measure the deflections. Wrought-iron is to be strained only until it has a sensible permanent set, but cast-iron and wood are to be tested to rupture. Wood specimens generally rupture on one side only: in that case turn over and make complete test as in the first instance.

101. Form of Report.—In the report describe the machine, method of making test, form of cross-section, peculiarities of the section, and make a sketch showing position and form of rupture. Submit a complete log of the test, together with drawing of the elastic curve, to be filed for permanent record. The following is a form for data and results of a transverse test:

DATA OF TRANSVERSE TEST OF.....

Form of cross-section.....

Length between supports.....ins.

On.....Testing-machine.

Time.....hrs.....mins.

Date..... Observers: {.....
.....

No.	Load W.	Deflection.		Remarks.
		Reading.	Net.	

REPORT OF TRANSVERSE TEST.

Material..... Wt. per cu. ft.....lbs.

Form .....

Composition..... Specific Gravity.....

Load Applied.....

Testing-machine.....

Time.....hrs.....min.

Date.....,189 . Observers: {.....
.....

Dimensions.	Symbol
Length ..... in.	l
Diameter..... in.	D
Breadth..... in.	b
Height..... in.	h
Max. fibre distance..... in.	e
Moment of inertia.....	I

Load.	Actual.	Reduced per sq. in. in Outer Fibre.
Elastic limit...	.....	.....
Maximum.....	.....	.....
Deflection.		
Elastic limit.	.....	.....
Maximum.....	.....	.....

Modulus of elasticity..... .....lbs. per sq. in.
Modulus of resilience.....ft. lbs.
Remarks:

Description of Fracture.

Sketch of Fracture.

The following forms are used by Prof. Lanza in the laboratory of the Institute of Technology for log and report of transverse test:

LOG.

No..... Date.....

Specimen.....

Span..... Wt. of beam..... Wt. of yoke, etc.....

Position of load.....

Tested by..... .....

	Loads.	Micrometer-readings.				Mean.	Differences.	Remarks.
		1	2	1	2			

Modulus of elasticity.....

Modulus of rupture (including weight of beam).....

Maximum intensity of longitudinal shear.....

REPORT.

No..... Date.....

Specimen.....

Span, ...

Dimensions, ...

Weight of beam, ...

Weight of yoke, etc., ...

Deflection, ...

Modulus of elasticity, ...

Modulus of rupture (including weight of beam), ...

Maximum intensity of longitudinal shear, ...

(Signed).....

102. Elastic Curve.—The object of this experiment is to determine the coefficient and moduli of the material, by loads less than that required at the elastic limit. The required general formulæ are to be found in Art. 52, page 77. A table of deflections corresponding to various centre loads is to be found on page 79. The beam is to be supported at both ends on rounded supports or on rollers. The loads consist of weights of known amount that can be suspended at various points.

Apparatus needed.—Cathetometer or other suitable instrument for measuring deflection.

Directions.—Obtain dimensions of beam, compute moment of inertia of cross-section; note material of beam, and compute probable deflection and corresponding load at elastic limit.

Carefully divide the length of the beam into equal parts, and mark these divisions on the centre-line of the beam. With no load on the beam, take cathetometer-readings of each point, then apply successive increment of loads, each equal to one fifth the probable load at the elastic limit, and take corresponding readings of the cathetometer. From readings, obtain the deflections for each point, and plot the elastic curve. Compute the deflections for the corresponding points from the formula, using tabulated values of E, and plot the corresponding theoretical curve. Make deductions concerning the relation of the two curves.

The above experiment is to be performed with the load at center, and again with the load at a point one fourth or one third the length of the beam.

Similar experiments may be performed on beams fixed at one end, or fixed at one end and supported at the other.

TORSION-TEST.

103. Object.—The object of this experiment is to find the strength of the material to resist twisting forces, to find its general properties, and its moduli of rigidity and shearing-strength.

Thurston's Machine.—The special directions apply only to Thurston's torsion-machine (see Article 73, Figs. 61 and 62, page 114). In the use of the machine the constants are first obtained, the test-piece inserted between the jaws of the machine, stress applied, and the autographic strain-diagram obtained. This diagram is on a large scale, and gives quite accurate measures of the stresses or loads. The diagram is, however, drawn by attachment to the working parts of the frame, and consequently any yielding of the frame or slipping of the jaws appears on the diagram as a strain or yield of the specimen. The angular deformation α, as obtained from the diagram, is likely to be too great, especially within the elastic limit. This error should be determined in each test by attaching index arms at each end of the specimen, and corrections made to the results obtained from the diagram.

The characteristic form of diagram given by the torsion-machine is shown in Fig. 98, in which the results of tests of several materials is shown. In the above diagrams * the ordinates are moments of torsion ($P\alpha$), the abscissæ are developments of the angle of torsion (α). The value of one inch of ordinate is to be found by measuring the ordinate corresponding to a known moment of torsion, and the abscissa corre-

* See "Mechanics of Materials," page 240, by I. P. Church. Published by Wiley & Son, N. Y.

sponding to one degree of torsion is to be calculated from the known radius of the drum. Knowing these constants, numerical values can readily be obtained, and the coefficients of the strength of the material can be computed.

During the test, relax the strain occasionally: if within the elastic limit, the diagram will be retraced; but if beyond that

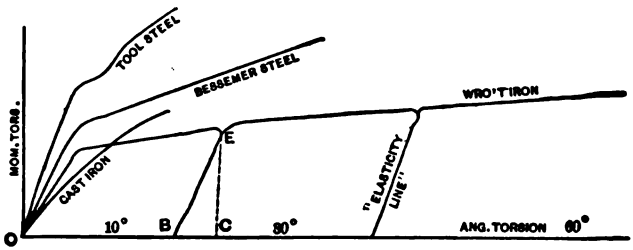

FIG. 98.

limit, a new path is taken, called an "elasticity" line by Thurston, which is in general parallel to the first part of the line, and shows the amount of angular recovery *BC*, and the permanent angular set *OB*.

104. Methods of Testing by Torsion with Thurston's Autographic Testing-machine. (See Articles 55 and 73.)

Method.—Determine first the maximum moment of the pendulum. This may be done by swinging the pendulum so that its centre-line is horizontal, supporting it on platform-scales and taking the weight and the distance of the point of support from the centre of suspension of the pendulum. The product of these two quantities is the maximum moment of the pendulum. Make three determinations, using different lever-arms, and take the mean for the true moment of the pendulum. A correction for the friction of the journal of the pendulum must be made. When hanging vertically, measure with a spring-balance, inserted in the eye near the bob, the force necessary to start the pendulum. Add this moment to that obtained above, and the result is the total maximum moment of the pendulum. From this the value of the moment for any angular position may be calculated.

RECORD OF TORSION-TESTS.

Testing-machine.....Thurston's Autographic. *Dimensions of Test-piece*.....Length one inch.

Date.....May 25, 1891. *Observer*.....H. H. Wood.

Material.	Moment of Torsion. Inch-pounds.		Angle of Torsion. Degrees.			Extension of Outer Fibre, per cent. (1) $\lambda = [\sqrt{1+\alpha^2 c^2} - 1]_{100}$			Shearing-stress. Pounds. (2) $p = \frac{2}{\pi}\frac{Pa}{c^3}$		Modulus of Rigidity. Pounds. (3) $E_s = \frac{lp}{\alpha e}$	Elastic Resilience. Inch-pounds. (4) $U = \frac{1}{2}Pa\alpha$
	Elastic Limit. Pa_E	Maximum. Pa_M	Elastic Limit. α_E	Maximum. α_M	Final. α	Elastic Limit. λ_E	Maximum. λ_M	Final. λ	Elastic Limit. p_E	Maximum. p_M		
Tool steel, Dia. = 0.6206,	2212	5124	40′	60°	62° 36′	.0006	5.11	5.54	47 360	109 710	13 170 000	12.83
Bessemer steel, Dia. = 0.5025.	784	2100	43′	206	206°	.00046	34.2	34.2	32 000	85 700	10 264 000	4.89
Wrought-iron, Dia. = 0.6233.	1022	2604	24′	290°	290°	.00023	85.6	85.6	21 840	55 720	10 120 900	3.56

In formulæ (2), (3), and (4) use Pa in inch-pounds. In (1), (3), and (4) use α in π-measure. Friction-pendulum, 1 pound. I_p is the polar moment of inertia, and equals $\frac{\pi c^4}{2}$ for circular section. Weight, 147 lbs. Corresponding distance, 40.8 inches. Value of 1° in π-measure is 0.01745. e = radius of specimen. Maximum moment, 5997.2 inch-pounds. Friction-moment, 40.8 inch-pounds.

Total moment, 6038.4 inch-pounds. Corresponding ordinate, 4.32 inches. Value 1 inch of ordinate, 140 inch-pounds. Value of 1 inch of abscissa, 10°.

Note the variation of the pencil-point between the vertical and the horizontal positions of the pendulum. This distance laid down on the *Y*-axis of the record-sheet corresponds to the maximum moment obtained above, whence calculate the value of one inch of ordinate. Calculate the length corresponding to one degree on the surface of the paper drum, parallel to the *X*-axis. This will be the unit to be used in calculating the angle of torsion. Fix the paper on the drum and draw the datum-line or *X*-axis. Insert the test-piece between the centres and screw in the centre until the neck of the test-piece is about midway between the jaws. Wedge the test-piece between the jaws as firmly as possible by hand, and then tap the wedges slightly with a copper hammer. Fasten an index-arm to each end of the specimen in such a manner that twisting or slipping of the specimen can be observed by reference to the centre of the pendulum on one end, and to a fixed point on the drum on the opposite end. Throw the worm into gear and turn the handle slowly and steadily until rupture occurs, only relaxing the stress once or twice during the test. Take the record of all the test-pieces on the same sheet with the same origin of co-ordinates.

Correct each diagram for amount of slipping of test-piece or yielding of frame by reference to index-arms carried by the test specimen.

The record of torsion-tests, page 162, is a numerical example, obtained from diagrams similar to those shown in Fig. 98.

IMPACT TESTS.

105. Directions for Testing Cast-iron by Impact with Heisler's Impact Testing-machine. (See Article 76, p. 119.)

Method.—Take a transverse test-bar of cast-iron and place it in the machine, cope side out, so that the blow will be struck in the middle of its length. Arrange the autographic device so that it will register the deflection of the bar. Place the tripping device or "dog" for a fall of two inches Catch the bob at this point, and trip at every notch above

successively until the bar breaks. Note the maximum height of fall. Report on the experiment the behavior of the test-bar and character of its fracture, and the number of impacts and the force in inch-pounds of the last blow. Compute the resilience of the test-piece. Try a similar bar at same ultimate fall, and observe the number of blows required to break it. Draw conclusions. Write complete report, and give moduli and coefficients.

106. Drop-tests.—The following method of making drop-tests has been recommended by the Committee on Standard Methods of Testing appointed by the American Society of Mechanical Engineers, and is substantially the same as adopted by the German Engineers at Munich in 1888:

Drop-tests are to be made on a *standard drop*, which is to embody the following essential points:

a. Each drop-test apparatus must be standardized.

b. The ball (*falling mass*) shall weigh 1000 or 1500 pounds; the smaller is, however, preferable.

c. The ball may be made of cast-iron, cast or wrought steel; the shape is to be such that its centre of gravity be as low as possible.

d. The striking-block is to be made of forged steel, and is to be secured to the ball by dovetail and wedges in a rigid manner, and so that the striking-face is placed strictly symmetrical about and normal to its vertical axis passing through the centre of gravity. Special permanent marks are to indicate the correctness of the face in these respects.

Special marks should be made to indicate the centre of the anvil-block.

e. The length of guides on the ball should be more than twice the width between the guides, which are to be made of metal; i.e., rails so placed that the ball has but a minimum amount of play between them. Graphite is recommended as lubricant.

f. The detachment or shears must not cause the ball to oscillate between the guides, and must be readily and freely controllable, with the point of suspension truly above the

centre of gravity of the ball; and a short movable link, chain, or rope is to be fixed between the ball and shears or detachment.

g. When a constant height of drop is used, an automatic detaching device is recommended.

h. The bearings for the test-piece are to be rigidly attached to the scaffold or frame, and they should be, wherever possible, in one piece with it.

i. The weight of frame, bearings, and anvil-block should be at least ten times that of the ball.

k. The foundation should be inelastic, and consist of masonry, the magnitude of which is to be determined by the locality and subsoil.

l. The surface struck should always be accurately level; therefore proper shoes or bearing-blocks are to be provided for testing rails, axles, tires, springs, etc., etc., to insure a proper level upper surface; these blocks are to be as light as possible.

The exact shape of these bearing-blocks is to be given on each test report.

m. The gallows or frame should be truly vertical and the guides accurately parallel.

n. The height of fall of ball should be 20 feet clear, between striking and struck surfaces.

o. Drops which by friction of ball on guides absorb two per cent of the work due to impact are to be discarded.

p. For large tests a ball weighing 2000 pounds is to be used.

q. A sliding-scale is to be attached to the frame, and in such a manner that the zero-mark can always be placed on a level with the top of the test-piece.

SPECIAL TESTS OF MATERIALS.

107. The following comparative tests are often useful:

1. *The Welding-test.*—This is to be done with a hammer weighing eight to ten pounds, with a given number of blows.

The weld is to be a simple scarf weld, made in a coke or gas flame without fluxes. Each bar to be tested to be treated in the same way, using in each case two or three samples of iron; one sample to be tested on the tension-machine, the other to be nicked to the depth of the weld and then bent or broken, to show the character of the welded surfaces.

2. *The Bending-test.*—This affords a ready means of finding the ductility of metals. The test-piece is to be bent about a stud having a diameter twice that of the specimen. The piece is to be bent with a lever, and no pounding is permitted. If the plate holding the stud is graduated, the angular deflection at time of permanent set may be read at once. A modification of the bending-test is often used to determine the property of toughness, by bending the specimen, first hot and then cold, until it is doubled over on itself.

3. *The Hardening-test* is used in connection with the other tests to determine the qualities of the specimen; the material, one specimen of which, having been previously welded, is carefully heated to a red heat, and plunged in water having a temperature of 32–40 degrees. This specimen is tested by torsion and bending, the same as the unhardened specimen.

4. *The Forging-test.*—The material is brought to a red heat and hammered until cracks begin to show, the relative amount of flattening indicating the red-shortness of the material. Useful principally with rivet-rods.

5. *Punching-tests.*—Find the least material that will stand between the edge and the hole punched, by measurement.

6. *Abrasion-tests.*—Find the amount of wear from a given amount of work.

7. *Hammer-test.*—This is made with a light hammer, and the character of the material is determined by the sound emitted. Is useful in locating defects in finished products, but of little value on test specimens.

Fatigue of Metals, or the effect of repeated stresses, is a matter of great practical importance, and was investigated very extensively by Wöhler. These results are discussed in full in a work by Weyrauch. It is well established that the

breaking-point is lowered by a large number of applications of stress. The proportional loads for wrought-iron, according to Wöhler, being as follows: Breaking-load applied once, 4; tension alternating with no stress, 2; tension alternating with compression, 1.

Rest of materials or removal of stress in some instances seems to restore both strength and elasticity.

Viscosity or the fluidity of metals under certain conditions is also well established.

The *effect of temperature* on the strength of metals has now been thoroughly investigated. The investigations at the Watertown Arsenal show that steel and wrought-iron bars increase slightly in tensile strength as the temperature increases to 600° F., and then decrease in proportion to increase of temperature, so that the breaking coefficients at 1600° F. lie between 10,000 and 20,000 pounds. See U. S. Report, Test of Metals, 1888.

108. Tests required for Different Material.*—In general the material is to be tested in such a manner as to develop the same strains that will be called forth in the peculiar use to which it is devoted.

The table, page 148, shows the tests that are prescribed for materials for various uses, by the Committee on Standard Tests and Methods of Testing of the American Society of Mechanical Engineers.

Pipes and Pipe-fittings.—These should be subject to an internal hydraulic pressure.

Car-wheels.—Car-wheels are usually subjected to the drop-test. The following method is employed by the Pennsylvania Railroad Company for testing cast-iron wheels:

For each fifty wheels which have been shipped, or are ready to ship, one wheel is taken at random by the railroad company's inspector, either at the railroad company's shops or at the wheel-manufacturer's, as the case may be, and subjected to the following test: The wheel is placed flange downward on an anvil-block weighing 1700 pounds, set on rubble masonry two feet down, and having three supports not more than five

* For detailed information see Proceedings Am. Soc. Testing Materials.

TABLE SHOWING TESTS REQUIRED.

Required Test denoted by *x*.

Material used for	Tension.	Compression.	Transverse.	Torsion.	Impact.	Welding.	Bending.	Hardening.	Forging.	Abrasion.	Punching.
Railroad rails	*x*	....	....	....	*x*	....	*x*	....	....	....	....
" car-axles	*x*	....	....	....	*x*	....	*x*	....	....	....	....
" " tires	*x*	....	....	....	*x*	....	....	....	....	....	....
Shafting	*x*	....	*x*	*x*	....	....	....	....	....	....	....
Building—wrought-iron	*x*	*x*	*x*	....	....	*x*	*x*	....	....	....	....
" low steel	*x*	*x*	*x*	....	....	....	*x*	*x*	....	....	....
" high steel	*x*	*x*	*x*	....	....	....	*x*	*x*	....	....	....
Boiler—wrought-iron	....	....	....	....	....	....	....	....	....	....	....
" plates	*x*	....	*x*	....	....	....	*x*	....	*x*	....	*x*
" shape-iron	*x*	....	....	....	....	*x*	*x*	....	*x*	....	*x*
" rivet-rods	*x*	....	....	....	....	....	*x*	....	*x*	....	....
" low steels	*x*	....	....	....	....	....	*x*	*x*	*x*	....	....
Ship materials	....	....	....	....	....	....	....	....	....	....	....
" plates	*x*	....	....	....	....	....	*x*	....	....	....	....
" rivets	*x*	....	....	....	....	....	*x*	....	*x*	....	....
Wire	*x*	....	....	....	....	....	*x**	....	....	....	....
Wire rope	*x*	....	....	....	*x*†	....	....	....	....	....	....
Cast-iron	*x*	*x*	....	....	....	....	*x*	....	....	....	....
Copper and soft metals	*x*	*x*	....	....	....	....	*x*	....	....	....	....
Woods	*x*	*x*	*x*	....	....	....	....	....	....	....	....
Stones	....	*x*	*x*	....	....	....	....	....	....	....	....

* Repeat in both directions—also by winding. † Longitudinal.

inches wide for the wheel to rest upon. This arrangement being effected, the wheel is struck centrally on the hub by a weight of 140 pounds, falling from a height of twelve feet. Should the wheel break in two or more pieces before nine blows or less, the fifty wheels represented by it are rejected. If the wheel stands eight blows without breaking in two or more pieces, the fifty wheels are accepted.

109. Methods of Testing Bridge-materials.—The following directions are abstracted from the standard specifications adopted by bridge-builders.*

Wrought-iron. 1. *Appearance.*—All wrought-iron must be tough, ductile, fibrous, and of uniform quality for each class;

* See Handbook published by Carnegie, Phipps & Co., Pittsburg

straight, smooth, free from cinder pockets or injurious flaws, buckles, blisters, or cracks. When rolls are working at maximum thickness, poorer finish will be accepted.

2. *Manufacture.*—No special process of manufacture required.

3. *Standard Test-piece.*—The tensile strength, limit of elasticity and ductility shall be determined from a standard test-piece, not less than one quarter-inch in thickness, cut from a full-sized bar, and planed or turned parallel; if the cross-section is reduced, the tangent between shoulders shall be at least twelve times its shortest dimensions, and the minimum area of cross-section shall not be less than one fourth square inch in area and not more than one square inch. Whenever practicable, two opposite sides of the piece are to be left as they come from the rolls. A full-sized bar if less than the required dimensions may be used as its own test-piece.

The ductility, or per cent of strain, is obtained by measuring the elongation after breaking from the point of rupture both ways, on an original length, ten times the least cross-section, or at least five inches long.

In this length must occur the curve of reduction of area.

4. *Strength.*—The strength of the specimens to be a function of the size, and to be determined by the formulæ in the following table:

STRENGTH OF IRON REQUIRED FOR BRIDGE-BUILDING.

Character of the Iron.	Formulæ for Ultimate Strength. Pounds per sq. in. T	Strength at Elastic Limit. Per cent of Breaking.	Elongation at Rupture. Per cent.
Tension-iron, pins and bolts, and plate-iron less than 8 inches wide.	$52000 - \frac{7000A}{B}$	50	20
Plate-iron 8 to 24 inches wide.....	48000	54.2	12
" 24 to 36 " "	46000	51.5	10
" 36 to 48 " "	"	"	5
Shaped iron not specified above:			
" less than $\frac{1}{4}$ inch thick....	$50000 - \frac{7000A}{B}$	50	15
" over $\frac{1}{4}$ inch thick.....	"	"	12

In above formulæ A represents area in square inches, B circumference in inches.

5. *Hot-bending.*—All plates and angles must stand at a working heat a sharp bend at right angles without sign of fracture.

6. *Rivet-iron.*—Rivet-iron must be tough and soft, and capable of bending cold until the sides are in close contact.

7. *Cold-bending.*—All tension-iron pins, bolts, and plate less than 8 inches wide, must bend cold 180°, to a curve whose inner radius equals the thickness, without sign of fracture.

8. Specimens of full thickness, from plate-iron or from flanges or webs of shaped iron, must bend cold through 90° to a curve whose inner radius is $1\frac{1}{2}$ times its thickness.

9. *Number of Test-pieces.*—Four standard test-pieces to be tested free of cost on each contract, with one additional for each 50,000 pounds of iron, and as many more as the contractor will pay for at $5 each. If any test-piece gives results more than 4 per cent below the requirements, the particular bar from which it was taken may be rejected, but the results shall be included in the average. If any test-piece have a manifest flaw, its test shall not be considered. Two test-bars out of ten falling more than 4 per cent below the requirements shall be a cause for rejecting the whole lot from which they were taken as a sample.

A variation of more than $2\frac{1}{2}$ per cent of weight will also be a cause for rejection.

Steel.—The requirements as for manufacture, finish, number of test-pieces and method of testing as for iron.

1. *Test-pieces.*—Round test-pieces are to be obtained from three separate ingots of each cast, not less than three quarters of an inch in diameter and of a length not less than eight inches between the jaws of the testing-machine. These bars are to be truly rounded, finished at a uniform heat, and arranged to cool uniformly, and from these test-pieces alone the quality of the material shall be determined.

2. *Strength.*—All the above-described bars are to have a tensile strength, not less than 4000 pounds of that specified, an

elastic limit not less than one half the tensile strength of the test-bar, a percentage of elongation not less than 1,200,000, divided by the tensile strength in pounds per square inch; and a percentage of reduction of area not less than 2,400,000 divided by the tensile strength in pounds per square inch. The elongation should be measured after breaking on a specimen, with length at least ten times the least diameter of the cross-section, in which length must occur the entire curve of reduction from stretch.

Directions for testing and rejecting specimens same as for iron.

3. *Rivet-steel.*—The required strength is 60,000 pounds tensile strength, with elastic limit, elongation, and fracture as in clause 2. To be rejected if under 56,000 pounds, and to stand the same bending-test as rivet-iron.

Cast-iron.—All castings, except where chilled iron is specified, shall be tough gray iron, free from cold-shuts or blow-holes, true to pattern and of workmanlike finish. Sample pieces 1 inch square, cast from the same heat of metal in sand-moulds, shall sustain on a clear space of 4 feet 6 inches a central load of 500 pounds.

Workmanship.—Workmanship must be first-class; finished surfaces protected by white-lead and tallow; rivet-holes accurately spaced, and truly opposite before the rivets are driven.

Rivets must completely fill the holes, and be of a height not less than 0.6 diameter of the rivet.

Eye-bars and Pin-holes.—Pin-holes must be accurately bored, and within $\frac{1}{32}$ inch of position shown on drawing; its diameter not to exceed that of the pin by 0.02 inch if under $3\frac{1}{2}$ inches, or by 0.03 inch if over $3\frac{1}{2}$ inches.

Eye-bars must be straight, with holes in centre-line and in centre of head, and no welds in the body of the bar. All chord eye-bars from the same panel must permit pins to be easily inserted when placed in a pile.

Tests of Eye-bars.—Tests are to be made on full-size

specimens, rolled at the same time as those required for the structure.

The lot to which the sample test-bars belong shall be accepted when—

a. Not more than one third the bars tested, break in the eye.

b. Or if more than one third break in the eye, the tensile strength is within 5 per cent required by the formula $T = 52000 - \frac{7000A}{B} - 500$ (width of bar); all in inches.

Steel bars must show a strength within 4000 pounds of that required in clause 13.

A variation in thickness of heads will be allowed, not exceeding $\frac{1}{32}$ inch small, or $\frac{1}{16}$ inch large, from the specifications.

Annealing.—If a steel piece is partially heated during the progress of the work, the whole piece must be subsequently annealed. All bends in steel must be made cold, or the piece must be subsequently annealed.

110. Admiralty Tests.

Tests for Iron Plate.

Hot, to bend without fracture from 90° to 125°.

Cold, to bend without fracture to the following angles:

1-inch	plate...	lengthwise	10° to 15°,	crosswise	5°	
$\frac{3}{4}$ "	" ...	"	20° to 25°,	"	5° to 10°	
$\frac{1}{2}$ "	" ...	"	30° to 35°,	"	10° to 15°	
$\frac{1}{4}$ "	" ...	"	55° to 70°,	"	20° to 30°	

Tests for Plate Steel.*

1. *Strength.*—Strips cut lengthwise or crosswise of the plate to have an ultimate tensile strength of not less than 26 and not exceeding 30 tons per square inch of section, with an elongation of 20 per cent in a length of 8 inches.

---

* See "Manual of the Steam-engine," Vol. II., page 488, by R. H. Thurston.

2. *Temper.*—Strips cut lengthwise of the plate 1½ inches wide, heated uniformly to a low cherry-red and cooled in water of 82° F., must stand bending in a press to a curve of which the inner radius is one and a half times the thickness of the plates tested.

3. The strips are to be cut in a planing-machine, and have sharp edges removed.

4. The ductility of every plate is to be tested by the application of the shearing or bending tests on the contractor's premises and at his expense. The plates are to be bent cold with the hammer.

5. All plates to be free from lamination and injurious surface defects.

6. One plate out of every fifty or fraction thereof to be taken for testing by tensile and tempering test from every invoice.

7. The pieces cut out for testing are to be of parallel width from end to end, or for at least 8 inches in length. A latitude or variation in thickness will be permitted of 10 per cent for plates less than one half-inch thick, and of 5 per cent for plates over that thickness.

Tests for Angle, Bulb, or Bar Steel.

1, 2. *Strength* and *Temper.*—The requirements the same as for plate steel.

3. *Number of Tests.*—Cross ends to be cut off, and one piece for each fifty or fraction thereof to be tested in each invoice.

111. Lloyd's Tests for Steel used in Ship-building.* 1. *Strength.*—Strips cut lengthwise or crosswise of the plate, and also angle and bulb steel, to have an ultimate tensile strength of not less than 27 and not exceeding 31 tons per square inch of section, with an elongation corresponding to 20 per cent on a length of 8 inches before fracture.

2. *Temper.*—Tempering test the same as the Admiralty

* See Thurston's "Steam-engine," Vol. II.

test, except that inner radius of bend is three times the thickness.

Rivets to be same size as required for iron.

112. Standard Specifications for Cast-iron Water-pipe. Adopted by the American Water-works Association, Philadelphia, 1891. (Abstract from Transactions.)

1. *Length.*—Each pipe shall be of the kind known as "socket and spigot," and shall be 12 feet long from bottom of the socket to the end of the pipe.

2–7. *Metal.*—The metal shall be best quality neutral pig iron, with no admixture of cinder, cast in dry-sand moulds, placed vertically, numbered and marked with name of maker and date of making. The shell to be smooth and round, without imperfections, and of uniform thickness.

8–10. *Test-bars.*—Test-bars to be 26 inches long, 2 inches wide, and 1 inch thick, and to be tested for transverse strength. These bars shall stand, when carried flatwise on supports 24 inches apart, a centre load of 1900 lbs., and show a deflection of not less than 0.25 inch before breaking. Test-bars are to be cast when required by the inspector, and to be as nearly as possible the specified dimensions.

12–16. All pipes to be thoroughly cooled when taken from the pit, afterward thoroughly cleaned without the use of acid, then heated to 300° F., and plunged into coal-pitch varnish. When removed, the coating to fume freely and set hard within an hour.

17. *Testing.*—The pipes to be tested after the varnish hardens with hydrostatic pressure of 300 lbs. per square inch for all sizes below 12 inches diameter, and 250 lbs. for all above that diameter, and simultaneously to be struck with a 3-lb. hammer.

18–20. Templates to be furnished by the maker; the weight of pipe to vary not over 3 per cent from the standard; all tests to be made at expense of maker.

113. Tests of Stone, Brick, Cements.—These materials are principally used in walls of buildings and for foundations. For this use they are subjected principally to compression

or crushing stresses. The important properties are strength and durability. Stone is usually tested for compressive and transverse strength, brick for compressive strength, and cement and mortar for tension.

114. Testing Stones.—The specimens for compressive strength are cubes of various sizes, depending principally on the capacity of the testing-machine. These cubes are to be nicely made with the opposite sides perfectly parallel to provide a uniform bearing-surface. It is found that the larger the blocks the greater the strength per unit of area.*

To test Stone for Compressive Strength.—Have the specimen dry and dressed, and ground to a cube — inches on each edge, and with the opposite faces parallel planes. This is important, as imperfect or wedge-shaped faces concentrate the stress on a small area. In testing, use a layer of wet plaster-of-Paris between the specimen and the faces of the machine, to distribute the stress.

To test Stone for Transverse Strength.—In this case the specimen is dressed into the form of a prism 8 inches long and 2 by 2 inches in section. It is supported on bearings 6 inches apart, and a centre load applied. The strength is computed as explained under head of Transverse Testing, page 78.

Durability of stone is tested accurately only by actual trial. Some idea can be formed by noticing the effect of the weather on the exposed rocks in the quarry from which the specimen came.

In the method of standard tests adopted in Munich in 1887 the following additional tests are recommended:

1. Trial method with (*a*) a jumper or drill, (*b*) by rotary boring. The amount of work done by the drill to be determined by the momentum of drop, its velocity of rotation, and the shape or cutting angle of the drill or cutting tool. These qualities are to be determined by comparison with a standard

* See Unwin, "Testing of Materials."

drill working under definite conditions. 2. Examine the stone for resistance to shearing as well as to boring.

Report the results of the boring test on the following form:

STANDARD REPORT BLANK FOR BORING TEST.

1. Description of stone in its geological and mineralogical relations.
2. Miner's classification (hard, very hard, or extremely hard).
3. Texture (i. e., coarse-grained, fine-grained, parallel, normal to or inclined to axis of drill-hole).
4. Specific gravity of the stone.
5. Diameter of hole drilled.
6. Diameter of hole and core when boring.
7. Straight or curve edged drills.
8. Angle of edge of drills.
9. Number of blows per revolution of drill.
10. Effective weight of drill.
11. Mean effective drop of drill.
12. Number of blows required to drill the depth of hole.
13. Number and form of teeth of borer.
14. Statement of pressure on and velocity of bore, while boring.
15. Actual or total depth of bore-hole.
16. Calculated or indicated work done during boring stated in meter-kilograms per c. m. of hole bored. (When using a hollow borer the annulus of stone cut away is alone to be considered.)

3. Find when possible the position in the quarry originally occupied by the specimen tested.

4. Find out the intended use of the stone, and determine the character of tests largely from that. 5. Dry the stone until no further loss of weight occurs at a temperature of 30° C. (86° F.), and test in a dry condition.

Make the tests for strength as described, using as large specimens as possible. Also, test by compression rectangular blocks. Test also for tension and bending.

6. Obtain the specific gravity, after drying at a temperature of 86° F.

7. Examine the specimen for *resistance to frost* by using samples of uniform size, 7 cm. (2.76 inches) on each edge.

8. The *frost-test* consists of:

a. The determination of the *compressive strength* of *saturated* stones, and its comparison with that of dried pieces.

b. The determination of *compressive strength* of the dried stone after having been frozen and thawed out twenty-five times, and its comparison with that of dried pieces not so treated.

c. The determination of the loss of weight of the stone after the twenty-fifth frost and thaw. Special attention must be had to the loss of those particles which are detached by the *mechanical* action, and also those lost by solution in a definite quantity of water.

d. The examination of the frozen stone by use of a magnifying-glass, to determine particularly whether fissures or scaling occurred.

9. For the frost-test are to be used:

Six pieces for compression-tests in dry condition, three normal and three parallel to the bed of the stone, provided these tests have not already been made, in which it is permissible, on account of the law of proportions, to use cubical test-blocks larger than 7 cm. (2.76 inches).

Six test-pieces in saturated condition—not frozen, however; three tested normal to and three parallel to bed.

Six test-pieces for tests when frozen, three of which are to be tested normal to and three parallel to bed of stone.

10. When making the freezing-test the following details are to be observed:

a. During the absorption of water the cubes are at first to be immersed but 2 cm. (0.77 inch) deep, and are to be lowered little by little until finally submerged.

b. For immersion, distilled water is to be used at a temperature of from 15° C. (59° F.) to 20° C. (68° F.).

c. The saturated blocks are to be subjected to temperatures of from — 10° to — 15° C. (14° to 5° F.). This can be done in a vessel surrounded with melting ice and salt.

d. The blocks are to be subjected to the influence of such cold for four hours, and they are to be thus treated when completely saturated.

e. The blocks are to be thawed out in a *given quantity* of distilled water at from 59° F. to 64° F.

11. An investigation of *weathering* qualities—stability under influences of atmospheric changes—can be neglected when the frost-test has been made. However, the effects in this respect, in *nature*, are to be carefully observed and compared with previous experience in the use of similar material. Observe—

a. The effect of the sun in producing cracks and ruptures in stones.

b. The effect of the air, and whether carbonic-acid gas is given off.

c. The effect of rain and moisture.

d. The effect of temperature.

115. Bricks or Artificial Building-stone.—*Brick are tested* for strength, principally by compression.

1. They should be ground to a form with opposite parallel faces, and are tested between layers of thin paper; or, without grinding, between thin layers of plaster-of-Paris, as explained for stone. The variation in size of specimen, and whether the brick is tested on end, side-ways, or flat-ways, will make a great difference in the results. The test, to be of any value, must state the method of testing. Whole bricks are stronger per unit of area than portions of bricks, and should be used when practicable.

2. It is also recommended that brick be tested for compression in the shape of two half-bricks superimposed, united by a thin layer of Portland cement, and covered on top and bottom with a thin layer of such paste to secure even bearing-surfaces.*

3. The transverse test for brick is believed to be a valuable index to its building properties. Support the brick on knife-edges 6 inches apart, and apply the load at the centre. Compute the modulus of rupture:

$$R = \frac{3}{2}\frac{Wl}{bd^2},$$

* See Vol. XI. (Standard Method of Testing), Transactions of American Society Mechanical Engineers, regarding Articles 114–118.

in which W equals the centre-load, l the length, b the breadth, d the depth, all in inches.

4. Dry as for stone, and determine the *specific gravity*.

5. Test hard-burned and soft-burned from the same kiln.

6. Determine the *porosity* of the brick as follows:

Thoroughly dry ten pieces on an iron plate; weigh these pieces; then submerge in water to one half the depth for twenty-four hours; then completely submerge for twenty-four hours, dry superficially, and weigh. Determine porosity from the weight of water absorbed, which should be expressed as per cent of volume. Express *absorption* as per cent of weight.

7. Determine resistance against frost, as previously explained for stones, using five specimens, and repeating the operation of freezing and thawing twenty-five times for each specimen. Observe the effect with a magnifying-glass. After freezing, test for compression, and compare the results with that obtained with a dry brick.

8. To test brick for *soluble salts*, obtain samples from an underburned brick and grind these to dust. Sift through a sieve 4900 meshes per square cm. (31,360 per square inch). The dust sifted out is lixiviated in 250 c.c. of distilled water, boiled for about one hour, filtered, and washed. The amount of soluble salts is then determined by boiling down the solution and bringing the residue to a red heat for a short time. The amount is determined by weight and expressed in percentage; its composition is determined by a chemical analysis.

9. Determinations of the presence of carbonate of lime, mica, or pyrites are to be made by chemical analysis.

116. Tests of Paving Material, Stones, and Ballast, Natural and Artificial.—In this case the following observations and tests should be made:

1. Information in regard to petrographic and geologic *classification*, the *origin* of the samples, etc., etc.; also:

2. Statement in regard to *utilization* of same.

3. *Specific gravity* of the samples is to be determined.

4. All materials used in the construction of roads, provided they are not to be used under cover or in localities without

frost, are to be tested for their *frost-resisting qualities* by similar test to those prescribed for natural stone.

5. Stones or brick used for paving are tested most satisfactorily in a manner representing their mode of utilization by determining the *wearing qualities* by an abrasion-test described by Prof. I. O. Baker as follows:* The *abrasion*-tests are made by putting the bricks and a number of pieces of iron into a revolving horizontal cylinder. The cylinder used by Prof. Baker was a foundry-rattler 45 inches long, 26 inches in diameter, and revolved at rate of 24 revolutions per minute. The iron used consisted of 546 pieces of "foundry-shot," weighing about $\frac{1}{8}$ pound each, thus making a total weight of $83\frac{1}{2}$ pounds.

In making the test, the "brick" is inserted in the rattler, which is put in motion and the loss determined by weighing at the end of each run. Three runs are made, each one half-hour in length; the comparisons are all made from the loss during the third run, expressed in percentages. Granite and various stones treated in the same way afford a valuable basis for comparison.

The uniformity of wearing qualities of brick for parts more or less distant from the exterior surface is determined by repeating the trial on the same piece, and not merely testing *one*, but a *greater number* of pieces. It is, moreover, necessary to test samples of the best, the poorest, and the medium qualities of bricks in any one kiln.

6. Obtain the transverse strength as explained.

7. Obtain the per cent of water absorbed after the bricks have been thoroughly dried at 30° C. (83° F.), as explained Arts. 91–95.

8. Test materials for ballast in a similar manner.

9. In some cases it may be desirable to test stones as to the capacity for receiving a polish.

10. Examinations of *asphalts* can only be made in an exhaustive manner by the construction of trial roads. An

* See *Clay-worker*, August and September 1891.

opinion coinciding with the results of such trial may be formed by—

(*a*) Determination of the quantity and quality of the bitumen contained therein (whether the bitumen be artificial or natural).

(*b*) By physical and chemical determination of the residue.

(*c*) By determination of the specific density of test-pieces of the material used by a needle of a circular sectional area of 1 sq. mm., carrying a weight of 300 grams. (See Art. 118, p. 163.)

(*d*) By the determination of the wear of such test-pieces by abrasion or grinding trials.

(*e*) By the determination of the resistance to frost of these test-pieces. (See Art. 119, page 163.)

117. Hydraulic Cements and Mortars—Definitions.—The standard scientific methods of testing cements depend principally upon researches conducted in the German laboratories. The standard method as here given is that recommended by the Committee on Standard Methods of Testing at Munich in 1888.

The following definitions will serve to distinguish the different classes of hydraulic bond materials:

1. *Common limes* are produced by roasting or burning limestones containing more or less clay or silicic acid, and which when moistened with water become wholly or partly pulverized and slaked. According to local circumstances, these are sold in shape of lumps or in a hydrated condition in the shape of a fine flour.

2. *Water-limes* and *Roman cements* are products obtained by burning clayey lime marls below the temperature of decrepitation, and which do not disintegrate upon being moistened, but must be powdered by mechanical means.

3. *Portland cements* are products obtained by burning clayey marls or artificial mixtures of materials containing clay and lime at decrepitation temperature, and are then reduced to the fineness of flour, and which contain for one part of hydraulic material at least 1.7 parts of calcareous earth. To regulate

properties technically important, an admixture of 2 per cent of foreign matter is admissible.

4. *Hydraulic fluxes* are natural or artificial materials which in general do not harden of themselves, but do so in presence of caustic lime, and then in the same way as a hydraulic material; i.e., puzzuolana, santorine earth, trass produced from a proper kind of volcanic tufa, blast-furnace slag, burnt clay.

5. *Puzzuolana cements* are products obtained by most carefully mixing hydrates of lime, pulverized, with hydraulic fluxes in the condition of dust.

6. *Mixed cements* are products obtained by most carefully mixing existing cements with proper fluxes. Such bond materials are to be particularly stated as "Mixed Cements," at the same time naming the base and the flux used.

Mortar is made by mixing three or four parts of sharp sand with one part of quick-lime or cement, and adding water until of the proper consistency. Mortar made from *quick-lime* will neither set nor stay hard under water; that made from *hydraulic* or *water-lime*, if allowed to set in the air, will not be softened by water; while that made from *cement* will harden under water.

118. Method of Testing Cements.—The principal properties which are necessary to know are: (1) its fineness; (2) time of setting; (3) its tensile strength; (4) its soundness or freedom from cracks after setting; (5) its heaviness or specific gravity; (6) its crushing strength; (7) its toughness or power to resist definite blows.

The following standard method of testing cements was adopted by a committee of the American Society of Civil Engineers and of the American Society of Testing Materials in 1903 and 1904.

Selection of Sample.—The sample shall be a fair average of the contents of the package; it shall be passed through a sieve having 20 meshes per lineal inch before testing to remove lumps. In obtaining a sample from barrels or bags, an auger or sampling-iron reaching to the centre should be used.

A chemical analysis, if required, should be made in accord-

ance with the directions in the Journal of the Society of Chemical Industry, published Jan. 15, 1902.

Specific Gravity.—This is most conveniently made with Le Chatelier's apparatus, which consists of a flask (*D*), Fig. 99, of

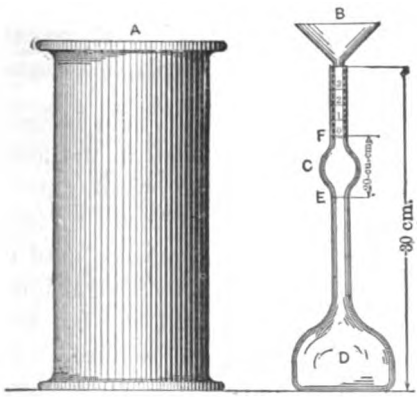

FIG. 99.—LE CHATELIER'S SPECIFIC-GRAVITY APPARATUS.

120 cu. cm. (7.32 cubic inches) capacity, the neck of which is about 20 cm. (7.87 inches) long; in the middle of this neck is a bulb (*C*), above and below which are two marks (*F* and *E*); the volume between these marks is 20 cu. cm. (1.22 cubic inches). The neck has a diameter of about 9 mm. (0.35 in.), and is graduated into tenths of cubic centimeters above the mark *F*. Benzine (62° Baumé naphtha), or kerosene free from water, should be used in making the determination.

The specific gravity can be determined in two ways: (1) The flask is filled with either of these liquids to the lower mark (*E*), and 64 gr. (2.25 ounces) of powder, previously dried at 100° C. (212° F.) and cooled to the temperature of the liquid, is gradually introduced through the funnel (*B*) [the stem of which extends into the flask to the top of the bulb (*C*)], until the upper mark (*F*) is reached. The difference in weight between the cement remaining and the original quantity (64 gr.) is the weight which has displaced 20 cu. cm.

(2) The whole quantity of the powder is introduced, and the level of the liquid rises to some division of the graduated neck. This reading plus 20 cu. cm. is the volume displaced by 64 gr. of the powder. The specific gravity is then obtained from the formula:

$$\text{Specific gravity} = \frac{\text{Weight of cement}}{\text{Displaced volume}}.$$

The flask during the operation is kept immersed in water in a jar, *A*, in order to avoid variations in the temperature of the liquid. Different trials should agree within 1 per cent.

The apparatus is conveniently cleaned by inverting the flask over a glass jar, then shaking it vertically until the liquid starts to flow freely. Repeat this operation several times.

Fineness.—The fineness is determined by the use of circular sieves, about 20 cm. (7.87 inches) in diameter, 6 cm. (236 inches) high, and provided with a pan 5 cm. (1.97 inches deep, and a cover.

The wire cloth should be woven (not twilled) from brass wire having the following diameters:

No. 100, 0.0045 inch; No. 200, 0.0024 inch.

This cloth should be mounted on the frames without distortion; the mesh should be regular in spacing and be within the following limits:

No. 100, 96 to 100 meshes to the linear inch;
No. 200, 188 to 200 " " " " "

50 to 100 gr. dried at a temperature of 212° F. prior to sieving should be used for the test, the sieves having previously been dried.

The coarsely screened sample is weighed and placed on the No. 200 sieve, which is moved forward and backward, at the same time striking the side gently with the palm of the other hand, at the rate of about 200 strokes per minute. The operation is continued until not more than one tenth of one per cent passes through per minute. The work is expedited by placing

in the sieve a small quantity of large shot, or, better, some flat pieces of brass or copper about the size of a cent. The residue is weighed, then placed on a No. 100 sieve and the operation repeated. The results should be reported to the nearest tenth of one per cent.

Normal Consistency.—The use of a proper percentage of water in mixing the cement or mortar is exceedingly important. No method is entirely satisfactory, but the following, which consists in the determination of the depth of penetration of a wire of a known diameter carrying a specified weight, is recommended The apparatus recommended is the *Vicat needle* shown in Fig. 100, which is also used for determining the time of setting. This consists of a frame, *K*, bearing a movable rod, *L*, with a cap, *D*, at one end, and at the other the cylinder, *G*, 1 cm. (0.39 inches) in diameter, the cap, rod, and cylinder weighing 300 gr. (10.58 oz.). The rod, which can be held in any desired position by a screw, *F*, carries an indicator, which moves over a graduated scale attached to the frame, *K*. The paste is held by a conical hard-rubber ring, *I*, 7 cm. (2.76 inches) in diameter at the base, 4 cm. (1.57 inches) high, resting on a glass plate, *J*, about 10 cm. (3.94 inches) square.

In making the determination, the same quantity of cement as will be subsequently used for each batch in making the briquettes (but not less than 500 grams) is kneaded into a paste and quickly formed into a ball with the hands, completing the operation by tossing it six times from one hand to the other, maintained 6 inches apart; the ball is then pressed into the rubber ring, through the larger opening, smoothed off, and placed (on its large end) on a glass plate and the smaller end smoothed off with a trowel; the paste, confined in the ring, resting on the plate, is placed under the rod bearing the cylinder, which is brought in contact with the surface and quickly released.

The paste is of normal consistency when the cylinder penetrates to a point in the mass 10 mm. (0.39 inch) below the top of the ring. Great care must be taken to fill the ring exactly to the top.

The trial pastes are made with varying percentages of water until the correct consistency is obtained.

The Committee has recommended, as normal, a paste the consistency of which is rather wet, because it believes that variations in the amount of compression to which the briquette is subjected in moulding are likely to be less with such a paste.

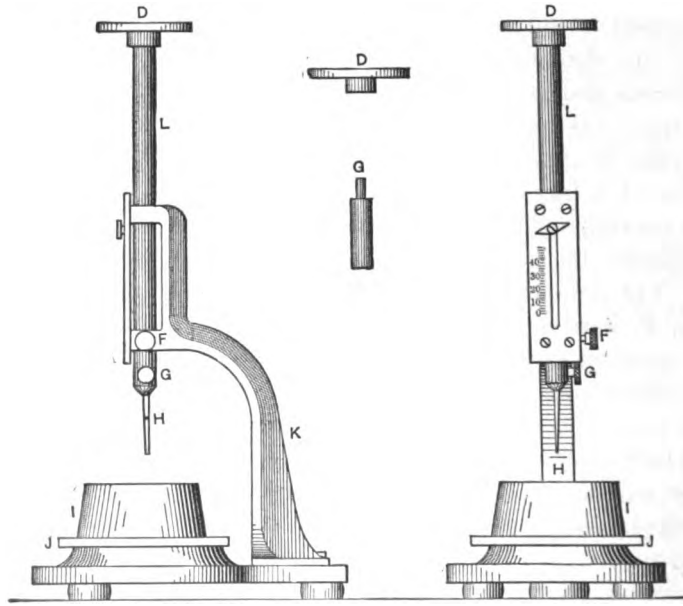

FIG. 100.—VICAT NEEDLE.

Time of Setting.—The object of this test is to determine the time which elapses until the paste ceases to be fluid and plastic, called the initial set, and also the time required for it to acquire a certain degree of hardness, called the final set.

For this purpose the Vicat needle, which has already been described, should be used. In making the test, a paste of normal consistency is moulded and placed under the rod (*L*), Fig. 100; this rod when bearing the cap (*D*) weighs 300 gr. (10.58 oz.). The needle (*H*), at the lower end, is 1 mm. (0.039 inch) in

diameter. Then the needle is carefully brought in contact with the surface of the paste and quickly released.

The setting is said to have commenced when the needle ceases to pass a point 5 mm. (0.20 inch) above the upper surface of the glass plate, and is said to have terminated the moment the needle does not sink visibly into the mass.

The test-pieces should be stored in moist air during the test. This is accomplished by placing them in a rack over water contained in a pan and covered with a damp cloth, the cloth to be kept away from them by means of a wire screen, or preferably they may be stored in a moist box or closet.

The determination of the time of setting is only approximate, since it is materially affected by the temperature of the mixing water, the percentage of the water used, and the amount of moulding the paste receives.

Standard Sand.—The committee recommend at present the use of a natural sand from Ottawa, Ill., screened to pass a sieve having 20 meshes per lineal inch and retained on a sieve having 30 meshes per lineal inch; the wires to have diameters of 0.0165 and 0.0112 inch respectively. This sand will be furnished by the Sandusky Portland Cement Co., Sandusky, Ohio, at a moderate price. This sand gives in testing considerably more strength than the crushed quartz of the same size formerly employed for this purpose.

Form of Briquette.—The form of briquette recommended is shown in Fig. 94. It is substantially like that formerly used except that the corners are rounded.

Moulds.—The moulds should be made of brass, bronze, or some equally non-corrodible material, and gang moulds of the form shown in Fig. 92 are recommended. They should be wiped with an oily cloth before using.

119. *Mixing.*—All proportions should be stated by weight; the quantity of water to be used should be stated as a percentage of the dry material. The metric system is recommended because of the convenient relation of the gram and the cubic centimeter. The temperature of the room and the mixing water

should be as near 21° C. (70° F.) as it is practicable to maintain it.

The sand and cement should be thoroughly mixed dry. The mixing should be done on some non-absorbing surface, preferably plate glass. If the mixing must be done on an absorbing surface, it should be thoroughly dampened prior to use. The quantity of material to be mixed at one time depends on the number of test-pieces to be made; about 1000 gr. (35.28 oz.) makes a convenient quantity to mix, especially by hand methods.

The material is weighed, dampened, and roughly mixed with a trowel, after which the operation is completed by vigorously kneading with the hand for 1½ minutes.

Moulding.—Having worked the mortar to the proper consistency it is at once placed in the mould by hand, being pressed in firmly with the fingers and smoothed off with a trowel without ramming, but in such a manner as to exert a moderate pressure. The mould should be turned over and the operation repeated. The briquettes should be weighed prior to immersion, and those which vary in weight more than 3 per cent from the average should be rejected.

Storage of the Test-pieces.—During the first twenty-four hours after moulding, the test-pieces should be kept in moist air to prevent them from drying out. A moist closet or chamber is so easily devised that the use of the damp cloth should be abandoned if possible. Covering the test-pieces with a damp cloth is objectionable, as commonly used, because the cloth may dry out unequally, and, in consequence, the test-pieces are not all maintained under the same condition. Where a moist closet is not available, a cloth may be used and kept uniformly wet by immersing the ends in water. It should be kept from direct contact with the test-pieces by means of a wire screen or some similar arrangement.

A moist closet consists of a soapstone or slate box, or a metal-lined wooden box—the metal lining being covered with felt and this felt kept wet. The bottom of the box is so constructed as to hold water, and the sides are provided with cleats for holding

glass shelves on which to place the briquettes. Care should be taken to keep the air in the closet uniformly moist.

After twenty-four hours in moist air the test-pieces for longer periods of time should be immersed in water maintained as near 21° C. (70° F.) as practicable; they may be stored in tanks or pans, which should be of non-corrodible material.

Tensile Strength.—The tests may be made on any standard machine. A solid metal clip, as shown in Fig. 93, is recommended. This clip is to be used without cushioning at the points of contact with the test specimen. The bearing at each point of contact should be ¼ inch wide, and the distance between the centre of contact on the same clip should be 1¼ inches.

Test-pieces should be broken as soon as they are removed from the water, the load being applied uniformly at the rate of about 600 pounds per minute. The average tests of the briquettes of each sample should be taken as the strength, excluding any results which are manifestly faulty.

Constancy of Volume.—The object is to develop those qualities which tend to destroy the strength and durability of a cement. As it is highly essential to determine such qualities at once, tests of this character are for the most part made in a very short time, and are known, therefore, as accelerated tests. Failure is revealed by cracking, checking, swelling, or disintegration, or all of these phenomena. A cement which remains perfectly sound is said to be of constant volume.

Tests for constancy of volume are divided into two classes: (1) normal tests, or those made in either air or water maintained at about 21° C. (70° F.), and (2) accelerated tests, or those made in air, steam, or water at a temperature of 45° C. (115° F.) and upward. The test-pieces should be allowed to remain twenty-four hours in moist air before immersion in water or steam, or preservation in air.

For these tests, pats, about 7½ cm. (2.95 inches) in diameter, 1¼ cm. (0.49 inch) thick at the centre, and tapering to a thin edge, should be made, upon a clean glass plate [about 10 cm. (3.94 inches) square], from cement paste of normal consistency.

Normal Test.—A pat is immersed in water maintained as near 21° C. (70° F.) as possible for 28 days, and observed at intervals. A similar pat is maintained in air at ordinary temperature and observed at intervals.

Accelerated Test.—A pat is exposed in any convenient way in an atmosphere of steam, above boiling water, in a loosely closed vessel for three hours.

To pass these tests satisfactorily, the pats should remain firm and hard, and show no signs of cracking, distortion, or disintegration. Should the pat leave the plate, distortion may be detected best with a straight-edge applied to the surface which was in contact with the plate. In the present state of our knowledge it cannot be said that cement should necessarily be condemned simply for failure to pass the accelerated tests, nor can it be considered entirely satisfactory if it has passed these tests.

120. Specifications for Cement.—The following specifications were adopted by the committee of the American Society for Testing Materials, Nov. 14, 1904:

General Conditions.—1. All cement shall be inspected.

2. Cement may be inspected either at the place of manufacture or on the work.

3. In order to allow ample time for inspecting and testing, the cement should be stored in a suitable weather-tight building having the floor properly blocked or raised from the ground.

4. The cement shall be stored in such a manner as to permit easy access for proper inspection and identification of each shipment.

5. Every facility shall be provided by the contractor and a period of at least twelve days allowed for the inspection and necessary tests.

6. Cement shall be delivered in suitable packages with the brand and name of manufacturer plainly marked thereon.

7. A bag of cement shall contain 94 pounds of cement net. Each barrel of Portland cement shall contain 4 bags, and each barrel of natural cement shall contain 3 bags of the above net weight.

8. Cement failing to meet the seven-day requirements may be held awaiting the results of the twenty-eight-day tests before rejection.

9. All tests shall be made in accordance with the methods proposed by the Committee on Uniform Tests of Cement of the American Society of

Civil Engineers, presented to the Society January 21, 1903, and amended January 20, 1904, with all subsequent amendments thereto.

10. The acceptance or rejection shall be based on the following requirements:

11. NATURAL CEMENT.—*Definition.*—This term shall be applied to the finely pulverized product resulting from the calcination of an argillaceous limestone at a temperature only sufficient to drive off the carbonic acid gas.

12. *Specific Gravity.*—The specific gravity of the cement thoroughly dried at 100° C. shall be not less that 2.8.

13. *Fineness.*—It shall leave by weight a residue of not more than 10% on the No. 100 sieve, and 30% on the No. 200.

14. *Time of Setting.*—It shall develop initial set in not less than ten minutes, and hard set in not less than thirty minutes nor more than three hours.

15. *Tensile Strength.*—The minimum requirements for tensile strength for briquettes one inch square in cross-section shall be within the following limits, and shall show no retrogression in strength within the periods specified:*

NEAT CEMENT.

Age		Strength.
24 hours	in moist air.....	50–100 lbs.
7 days	(1 day in moist air, 6 days in water).....	100–200 "
28 days	(1 day in moist air, 27 days in water).....	200–300 "

ONE PART CEMENT, THREE PARTS STANDARD SAND.

7 days	(1 day in moist air, 6 days in water).....	25–75 "
28 days	(1 day in moist air, 27 days in water).....	75–150 "

16. *Constancy of Volume.*—Pats of neat cement about three inches in diameter, one-half inch thick at centre, tapering to a thin edge, shall be kept in moist air for a period of twenty-fours hours.

(*a*) A pat is then kept in air at normal temperature.

(*b*) Another is kept in water maintained as near 70° F. as practicable.

17. These pats are observed at intervals for at least 28 days, and, to satisfactorily pass the tests, should remain firm and hard and show no signs of distortion, checking, cracking, or disintegrating.

18. PORTLAND CEMENT.—*Definition.*—This term is applied to the finely pulverized product resulting from the calcination to incipient fusion of an intimate mixture of properly proportioned argillaceous and calcareous mate-

* For example, the minimum requirement for the twenty-four-hour neat-cement test should be some specified value within the limits of 50 and 100 pounds, and so on for each period stated.

rials, and to which no addition greater than 3% has been made subsequent to calcination.

19. *Specific Gravity.*—The specific gravity of the cement, thoroughly dried at 100° C., shall be not less than 3.10.

20. *Fineness.*—It shall leave by weight a residue of not more than 8% on the No. 100 sieve, and not more than 25% on the No. 200.

21. *Time of Setting.*—It shall develop initial set in not less than thirty minutes, but must develop hard set in not less than one hour nor more than ten hours.

22. *Tensile Strength.*—The minimum requirements for tensile strength for briquettes one inch square in section shall be within the following limits, and shall show no retrogression in strength within the periods specified:*

NEAT CEMENT.

Age.		Strength.
24 hours	in moist air.....	150–200 lbs.
7 days	(1 day in moist air, 6 days in water).....	450–550 "
28 days	(1 day in moist air, 27 days in water).....	550–650 "

ONE PART CEMENT, THREE PARTS SAND.

7 days	(1 day in moist air, 6 days in water).....	150–200 "
28 days	(1 day in moist air, 27 days in water).....	200–300 "

23. *Constancy of Volume.*—Pats of neat cement about three inches in diameter, one-half inch thick at the centre, and tapering to a thin edge, shall be kept in moist air for a period of twenty-four hours.

(*a*) A pat is then kept in air at normal temperature and observed at intervals for at least 28 days.

(*b*) Another pat is kept in water maintained as near 70° F. as practicable, and observed at intervals for at least 28 days.

(*c*) A third pat is exposed in any convenient way in an atmosphere of steam, above boiling water, in a loosely closed vessel for five hours.

24. These pats, to satisfactorily pass the requirements, shall remain firm and hard and show no signs of distortion, checking, cracking, or disintegrating.

25. *Sulphuric Acid and Magnesia.*—The cement shall not contain more than 1.75% of anhydrous sulphuric acid (SO_3), nor more than 4% of magnesia (MgO).

---

* For example, the minimum requirement for the twenty-four-hour neat-cement test should be some specified value within the limits of 150 and 200 pounds, and so on for each period stated.

The following observations are taken with respect to each briquette:

Brand of cement.....
Temperature of air at mixing.....
Temperature of water at mixing.....
Percentage of sand.....
" " water.....
" " cement.....
Date of mixing.....
Time of mixing.....

In the log of the tests the following are the headings for the columns: No.; Time of Testing; Weight of Water; Tensile Strength; and Remarks.

Prof. Lanza of Boston requires a report of the following form:

CEMENT TEST.

Date of test, ...
Date of mixing, ...
No. of days set, ...
Manner of setting (in air or in water), ...
Kind of cement, ...
Brand, ...

	Cement.	Sand.	Water.	Lime.
Mixture (by wt.),	.....%	.....%	.....%	.....%

Breaking-strength per sq. in. (tension), ...
Crushing-load (2-in. cube), ...

Signed..... .....

The cement-testing laboratory of Berlin, which has perhaps the best reputation for this line of work, makes observations as shown on the following schedule, which gives the results of eleven tests, as given in a paper by P. M. Bruner, before the Engineers' Club of St. Louis:

LOG AND DATA, BERLIN LABORATORY REPORT.

No.	Brand.	Weight per Litre.	Water required		Time of Setting.	Rise of Temperature in Setting.	At Test-making			Rejected by Sieve of Meshes per sq. in.					Neat Cement.			1.3 Normal Sand.		
			for Producing Plasticity.	for Setting on Glass.			The Temperature of Air was	The Temperature of Water was	The Humidity of Air was	32,250	5,800	3,870	2,100	1,160	Mixed with Water.	Tensile Strength per sq. cm. in 7 days.	Tensile Strength per sq. cm. in 28 days.	Mixed with Water.	Tensile Strength per sq. cm. in 7 days.	Tensile Strength per sq. cm. in 28 days.
					Hrs.															
43	A	1.986 1.336	30%	26%	6	5°C.	21°C.	16°C.	68%	24%	4%	2%	2%	0%	17%	63	66	9.25%	22.75	25.9
60	A	1.918 1.287	30	26	3½	5	18.7	15	74	24	4	1	3	0	16	65	.....	9.25	25.4	.....
124	A	1.754 1.187	34	26	3 6	2	18	15	64	26	2	1.2	0	0	17.5	51.7	60.7	10	22.7	26.6
27	D	2.088 1.491	31	26	4	1.2	22	16.8	68	36	11.5	5	2.7	5	16	25	39.8	9.5	....	12.13
31	D	2.180 1.600	26	22	9	1.8	23.5	16.8	72	54	19.5	8	5	0	.....	... ...	.....	9.5	.....	13.55
9	D	1.956 1.372	31	24	2–4½ min.	1.6	18	15	69	26	2	1.2	0	0	17	51	54	9	17.5	23
105	D	1.972 1.396	32	26	10–35	2.6	18	15.5	70	24	2	0	0	0	17.5	32	37.5	9.75	14	20
28	.....	1.720 1.181	38	33	4	1.9	23	16	68	12	0	0	0	0	19.75	36	39	9.5	21	28.5
127	Puzz.	1.238 0.753	64	52	1 11	3.0	18	15	63	6	0	0	0	0	32	21	26	11.5	16	25
51	H	1.606 1.160	36	29	½–1½	4.0	18	15	70	4	0	0	0	0	.....	.....	.....	10	.....	27.5
50	H	1.932 1.350	30	25	3	1.1	18	15	72	24	7	4	1.5	0	15.5	33	39	9	12.7	17.9

1 Kilo. sq. cm. = 14.22275 sq. in. 1 sq. in. = 6.4514 sq. cm.

121. Coefficients of Strength.—It is desirable to know in advance of the test the probable load the material under investigation will safely bear, in order that increments of stress may be so proportioned as to make a reasonable number of observations. It is also often desirable to know how the results obtained compare with the standard values for the material under investigation. To provide this information a brief statement of the results of various tests are tabulated in the Appendix. These results are mainly obtained from "Materials of Construction," by R. H. Thurston (3 vols.; N. Y., Wiley & Son); and from "Applied Mechanics," by Prof. G. Lanza (N. Y., J. Wiley & Son); and "Materials of Engineering," by Prof. W. H. Burr (N. Y., J. Wiley & Son). These books will be found of great value for reference in the testing-laboratory.

CHAPTER VI.

FRICTION—TESTING OF LUBRICANTS.

122. Friction.—This subject is of great importance to engineers, since in some instances it causes loss of useful work, and in other instances it is utilized in transmission of power. The subject is intimately connected with that of measurement of power by dynamometers, treated in Chapter VII.; in connection with these two chapters, the student is advised to read "Friction and Lost Work in Machinery and Mill-work," by R. H. Thurston; N. Y., J. Wiley & Sons.

Definitions.—Friction, denoted by F, is the resistance to motion offered by the surfaces of bodies in contact in a direction parallel to those surfaces.

The *normal force*, denoted by R, is the force acting perpendicular to the surfaces, tending to press them together.

The *coefficient of friction*, f, is the ratio of the friction, F, to the normal force, R; that is, $f = F \div R$.

The *total pressure*, P, is the resultant of the normal pressure, R, and of the friction, F, and its obliquity or inclination to the common perpendicular of the surfaces is the *angle of repose*, or *friction*, whose tangent is the coefficient of friction.

The *angle of repose* or *friction*, ϕ, is the inclination at which a body would start if resting on an inclined plane. It is easy to show * that for that condition, if W is the weight of the body,

$$W \cos \phi = R; \quad \text{also,} \quad W \sin \phi = F;$$

* See Mechanics, by I. P. Church; p. 164.

and since $f = F \div R$,

$$f = \frac{W \sin \phi}{W \cos \phi} = \tan \phi.$$

It has been shown by experiment that for *sliding friction* (1) the coefficient f is independent of R; (2) it is greater at the instant of starting than after it is in motion; (3) it is independent of the area of rubbing surfaces; (4) it is diminished by lubrication; (5) it is independent of velocity.

123. Classification and Notation.—The subject of friction is naturally divided into the following sub-heads, all of which are intimately connected with methods of lubrication:

A. *Friction of rest*, occurring when a body is about to start. It is the resistance to change of position.

B. *Friction of motion*, occurring during uniform motion, and being less than the friction of rest.

The second kind, or friction of motion, is of principal importance, and consists of—

1. Sliding friction.
   - *a*. Bodies sliding on a plane.
   - *b*. Axles or journals rolling in boxes.
   - *c*. Pivots turning on a plane step.
2. Rolling friction.
   - *a*. One body rolling over a plane.
   - *b*. One body rolling over another.

124. Formulæ and Notation.

α = angle of inclination of plane;
ϕ = angle of friction;
θ = arc of contact on journal;
β = inclination of force with plane;
R = normal force on a plane;
f = coefficient of friction;
r = radius of journal;
l = length of journal;
a = space passed through;
p = intensity of pressure per sq. in.;
P = total pressure;
W = weight of the body.

The most important formulæ relating to friction can be tabulated as follows:

TABLE OF USEFUL FORMULÆ.

On a Plane.	Force of friction.....	F	$fW = W \tan \alpha = W \tan \phi.$
	Coefficient of friction.....	f	$\text{Tan } \alpha = \tan \phi = \sqrt{W^2 - R^2} \div R.$
	Oblique force.....	$\pm D$	$W (\sin \alpha \pm f \cos \alpha) \div (\cos \beta \pm f \sin B).$
	Force of friction.....	F	$fR = W \sin \varphi = fW \div \sqrt{1+f^2}.$
Loose-fitting Journal.	Square of reaction of bearing.	N^2	$W^2 - F^2 = W^2(1 - \sin^2 \phi) = W^2 \cos^2 \phi.$
	Weight on journal (squared)..	W^2	$N^2 + F^2 = N^2(1+f^2) = F^2(1+f^2) \div f^2.$
	Moment of friction.....	M	$Fr = Wr \sin \phi = fWr \div \sqrt{1+f^2}.$
	Work of friction per minute...	U	$War \sin \phi = 2\pi nrW \sin \phi = 2\pi nrfW \div \sqrt{1+f^2}.$
Perfectly fitting Journal.	Weight on journal (general)...	W	$\int_{-\theta}^{+\theta} plr \cos \theta d\theta.$
	Intensity of pressure at $\theta = 90°$	p'	$p \div \cos \theta.$
	Weight, perfect fit of journal..	W	$p'lr \int_{-\frac{1}{2}\pi}^{+\frac{1}{2}\pi} \cos^2 \theta d\theta = 1.57 p'lr.$
	Pressure per square inch	p	$0.64\, W \cos \theta \div lr.$
	Maximum pressure per sq. inch	p_m	$0.64\, W \div lr.$
	Total pressure on bearing	P'	$0.64\, W \int_{-\theta}^{+\theta} \cos \theta d\theta = 1.27\, W.$
	Total force of friction	F	$fP'W = 1.27 fW.$
	Work of friction	U'	$1.27 fW$ (space).
	Moment of friction.....	M	$P'fr = 1.27 fWr.$
	Work of friction per minute ..	U	$Ma = 1.27 fWr = 2.54 \pi fnrW.$
Uniform pressure on Journal.	Maximum pressure per sq. inch	p'	$W \div 2lr.$
	Total pressure.	P'	$p'l\pi r = \frac{1}{2}\pi W = 1.57\, W.$
	Total force of friction.....	F	$P'f = 1.57 fW.$
	Moment of friction.....	M	$P'fr = 1.57 fWr.$
	Work of friction per minute...	U	$Ma = 1.57 afWr = 2\pi fWrn.$

125. Friction of Journals in V or Triangular Bearings.—Force of friction $F = P \cos \phi \sin \phi \div \cos \alpha$, in which P equals the force transmitted through the shaft. When $\cos \phi = 1$, $F = P \sin \phi \div \cos \alpha$.

126. Friction of Pivots on Flat Rotating Surfaces.—Intensity of pressure $= p$; total pressure $= P$. Moment o

friction, $M = \frac{1}{2}fPr$. Work of friction, $U = \frac{1}{3}\pi nfPr$. For a conical pivot, $M = \frac{1}{3}fPr \div \sin \alpha$. $\alpha = \frac{1}{2}$ angle of cone.

For Friction on a Flat Collar.—Moment of friction, $M = \frac{2}{3}fP(r^3 - r'^3) \div (r^2 - r'^2)$; r = radius of collar; r' = radius of shaft on which it is fitted.

127. Friction of Teeth—Rolling Friction.—Work lost in a unit of time, $U = nFPs$, in which s equals the sliding or slipping; n, number of teeth; other terms as before. For involute teeth, in which C_1 = length of arc of approach, C_2 that of arc of recess, θ the obliquity of action, r_1 and r_2 respective pitch-radii, we have for involute teeth

$$U = nfPs = nfP(C_1^2 + C^2)\left(\frac{1}{r_1} + \frac{1}{r_2}\right) \div 2 \cos \theta.$$

This is nearly accurate for any teeth. (See article "Mechanics," *Encyc. Britannica.*)

128. Friction of Cords and Belts—Sliding Friction.—Let T_1 be the tension on driving side of belt, T_2 on the loose side, T the tension at any part of the arc of contact; let θ be the length of the arc of contact divided by the radius, i.e., expressed in circular measure; let c equal the ratio of the arc of contact to the entire circumference; let d equal the number of degrees in the arc of contact, e the base of the Napierian logarithms = 2.71828, m the modulus of the common logarithms = 0.434295; let F equal the force of friction.

$$\theta = \frac{\pi r}{180} \frac{d}{r} = \frac{\pi d}{180}, \quad \ldots\ldots\ldots \quad (a)$$

$$c = \frac{d}{360} = \frac{\theta}{2\pi}, \quad \ldots\ldots\ldots \quad (b)$$

$$d = \frac{180\theta}{\pi} = 360c. \quad \ldots\ldots\ldots \quad (c)$$

The tension at any point, dT, is equal to the resistance $Tfd\theta$. Hence

$$dT = Tfd\theta, \quad \ldots\ldots\ldots \quad (d)$$

or

$$fd\theta = \frac{dT}{T}.$$

This integrated between limits T_1 and T_2 gives

$$f\theta = \log_e \frac{T_1}{T_2} = \frac{1}{m} (\text{common}) \log \frac{T_1}{T_2}; \quad \ldots \quad (e)$$

hence

$$\frac{T_1}{T_2} = e^{f\theta} = 10^{f\theta m} = 10^{\frac{f\pi dm}{180}} = 10^{2\pi fcm} = B. \quad \ldots \quad (f)$$

From the nature of the stress,

$$F = T_1 - T_2. \quad \ldots \quad (g)$$

$\frac{T_1}{T_2}$ = the number corresponding to the logarithm, which is equal $f\theta m$, or $\frac{f\pi dm}{180}$, or $2\pi fcm$.

Substituting numerical values,

$f\theta m = 0.434 f\theta$, $\frac{f\pi dm}{180} = 0.00758 fd$, and $2\pi fcm = 2.7288 fc$.

From equations (f),

$$\text{common log}\left(\frac{T_1}{T_2}\right) = 0.434 f\theta = 2.7288 fc.$$

By solving equations (f) and (g),

$$T_1 = F\frac{B}{B-1}, \quad \ldots \quad (h)$$

$$T_2 = F\frac{1}{B-1}. \quad \ldots \quad (k)$$

129. Friction of Fluids (1) is independent of pressure; (2) proportional to area of surface; (3) proportional to square of velocity for moderate and high speeds and to velocity for low speeds; (4) is independent of the nature of the surfaces; (5) is proportional to the density of the fluid, and is related to viscosity.

The resistance to relative motion in case of fluid friction,

$$R = fAV^2 = 2ghfA = f'hwA;$$

the work of friction,

$$U = Rs = RVt = fAV^2t = f'Ahw Vt.$$

In the above formulæ R = resistance of friction, A = area of surface, V = velocity of slipping, h = head corresponding to velocity, w = weight, f the resistance per unit of area of surface, f' = coefficient of liquid friction, $f' = \frac{2gf}{w}$.

Viscosity and density of fluids do not affect to any appreciable ex... the retardation by friction in the rate of flow, but have some influen... upon the total expenditures of energy. Molecular or internal friction also exists.

130. **Lubricated Surfaces.**—Lubricated surfaces are no doubt to be considered as solid surfaces, wholly or partially separated by a fluid, and the friction will vary, with different conditions, from that of liquid friction to that of sliding friction between solids. Dr. Thurston * gives the following laws, applicable to perfect lubrication only:

1. The coefficient of friction is inversely as the intensity of the pressure, and the resistance is independent of the pressure.
2. The coefficient varies with the square of the speed.
3. The resistance varies directly as the area of journal and bearing.
4. The friction is reduced as temperature rises, and as the viscosity of the lubricant is thus decreased.

Perfect lubrication is not possible, and consequently the laws governing the actual cases are likely to be very different from the above. The coefficient of friction in any practical case is likely to be made up of the sum of two components, solid and fluid friction.

TESTING OF LUBRICANTS.

131. **Determinations required.**—The following determinations are required in a complete test of lubricants:

1. The composition, and detection of adulteration.
2. The measurement of density.

* See Friction and Lost Work, by Thurston.

3. The determination of viscosity.

4. The detection of tendency to gum.

5. The determination of temperatures of decomposition, vaporization, ignition, and solidification.

6. The detection of acids.

7. The measure of the coefficient of friction.

8. The determination of durability and heat-removing power.

9. The determination of its condition as to grit and foreign matter.

132. Adulteration of Oils.—Adulteration can be detected only by a chemical analysis.*

Animal oils may be distinguished from vegetable oils by the fact that chlorine turns animal oil brown and vegetable oil white.

133. Density of Oils.—The density or specific gravity is usually obtained with a hydrometer (see Fig. 101) adapted for this special purpose, and termed an oleometer. The distance that it sinks in a vessel of oil of known temperature is measured by the graduation on the stem; from this the specific gravity of the oil may be found.

FIG. 101. HYDROMETER.

The density is usually expressed in Beaumé's hydrometer-scale, which can be reduced to corresponding specific gravities as compared with water by a table given in the Appendix.

Beaumé's hydrometer is graduated in degrees to accord with the density of a solution of common salt in water; thus, for liquids heavier than water the zero of the scale is obtained by immersing in pure water; the five-degree mark by immersing in a five-per-cent solution; the ten-degree mark in a ten-per-cent solution; etc. For liquids lighter than water the zero-mark is obtained by immersing in a ten-per-cent solution of brine; the ten-degree mark by immersing in pure water. After obtaining the length of a degree the stem is graduated by measurement.

* See Friction and Lost Work, by R. H. Thurston.

The density may be found by obtaining the loss of weight of the same body in oil and in distilled water. The ratio of loss of weights will be the density compared with water.

It may also be obtained by weighing a given volume on a pair of chemical scales. The *density of animal oils* varies from .62 to .89; sperm-oil at 39° F. has a density of .8813 to .8815; rape-seed oil has a density of .9168; lard-oil (winter) has a density of .9175; cotton-seed oil a density of .9224 to .9231 for ordinary, and of .9128 for white winter; linseed-oil, raw, has a density of .9299; castor-oil, pure cold-pressed, a density of .9667.

134. Method of finding Density.—A. *With Hydrometer Thermometer, and Hydrometer Cylinder.*

Method.—1. Clean the cylinder thoroughly, using benzine fill first with distilled water. Set the whole in a water-jacket, and bring the temperature to 60° F. Obtain the reading of the hydrometer in the distilled water and determine its error.

2. Clean out the cylinder, dry it thoroughly, and fill with the oil to be tested; heat in a water-jacket to a temperature of 60° F., and obtain reading of hydrometer; also obtain reading, at temperatures of 40°, 80°, 100°, 125°, and 150°, and plot a curve showing relation of temperature and corrected hydrometer-reading.

Reduce hydrometer-readings to corresponding specific gravities, by table given in Appendix.

B. Weigh on a chemical balance the same volume of distilled water at 60° F., and of the oil at the same temperature; and compute the specific gravity.

C. Weigh the same metallic body by suspending from the bottom of a scale-pan of a balance: 1. In air; 2. In water; 3. In the oil at the required temperature. Carefully clean the body with benzine after immersing in the oil. The ratio of the loss of weight in oil to that in water will be the density.

135. Viscosity.—*Viscosity of oil* is closely related but not proportional to its density. It is also closely related, and in many cases it is inversely proportional, to its lubricating prop-

erties. The relation of the viscosities at ordinary temperatures is not the same as for higher temperatures, and tests for viscosity should be made with the temperatures the same as those in use. The less the viscosity, consistent with the pressure to be used, the less the friction.

The viscosity test is considered of great value in determining the lubricating qualities of oils, and it is quite probable that by means of it alone we could determine the lubricating qualities to such an extent that a poor oil would not be accepted nor a good oil rejected. It is, however, in the present method of performing it, to be considered rather as giving comparative than absolute results.

There are several methods of determining the viscosity It is usual to take the viscosity as inversely proportional to its flow through a standard nozzle while maintained at a constant or constantly diminishing head and constant temperature, a comparison to be made with water or with some well-known oil, as sperm, lard, or rape-seed, under the same conditions of pressure and temperature.

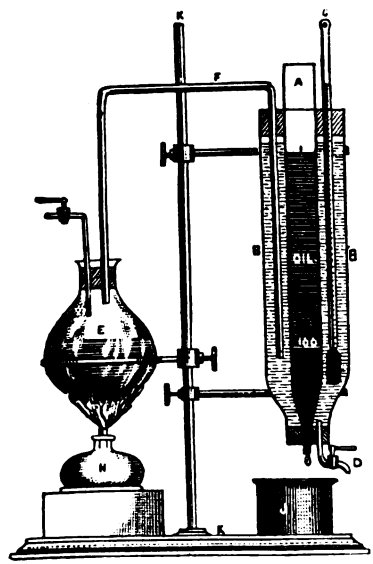

FIG. 102.—VISCOSITY OF OILS.

136. Viscosimeter.—A pipette surrounded by a water-jacket, in which the water can be heated by an auxiliary lamp and maintained at any desired temperature, is generally used as a viscosimeter. Fig. 72 shows the usual arrangement for this test. *E* is the heater for the jacket-water, *BB* the jacket, *A* the pipette, *C* a thermometer for determining the temperature of the jacket-water. The oil is usually allowed to run partially out from the pipette, in which case the head diminishes. Time for the whole run is noted with a stop-watch.

In the oil-tests made by the Pennsylvania R. R. Co. the pipette is of special form, holding 100 c.c. between two marks, —one drawn on the stem, the other some distance from the end of the discharge-nozzle.

137. Tagliabue's Viscosimeter.—In Tagliabue's viscosimeter, shown in Figs. 103 and 104, the oil is supplied in a basin *C*, and trickles downward through a metal coil, being discharged at the faucet on the side into a vessel holding 50 c.c. The oil is maintained at any desired temperature by heating the water in the vessel *B* surrounding the coil; cold water is supplied from the vessel *A*, as required to maintain a uniform temperature. The temperature of the oil is taken by the thermometer *D*.

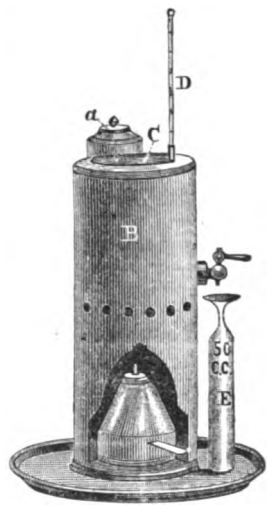

FIG. 103.—TAGLIABUE'S VISCOSIMETER.

138. Gibbs' Viscosimeter. — In the practical use of viscosimeters it is found that the time of flow of 100 c.c. of the same oil, even at the same temperature, is not always the same,—which is probably due to the change in friction of the oil adhering to the sides of the pipette.

To render the conditions which produce flow more constant, Mr. George Gibbs of Chicago surrounds the viscosimeter, which is of the pipette form, with a jacket of hot oil. A circulation of the jacket-oil is maintained by a force-pump. The oil to be tested is discharged under a constant head, which is insured by air-pressure applied by a pneumatic trough. The temperature of the discharged oil is measured near the point of discharge.

139. Perkins' Viscosimeter.—The Perkins Viscosimeter consists of a cylindrical vessel of glass, surrounded by a water or oil bath, and fitted with a piston and rod of glass. The edges of this piston are rounded, so as not to be caught by a slight angularity of motion. The diameter is one-thousandth of an

inch less than that of the cylinder. In practice the cylinder is filled nearly full of the oil to be tested, and the piston inserted.

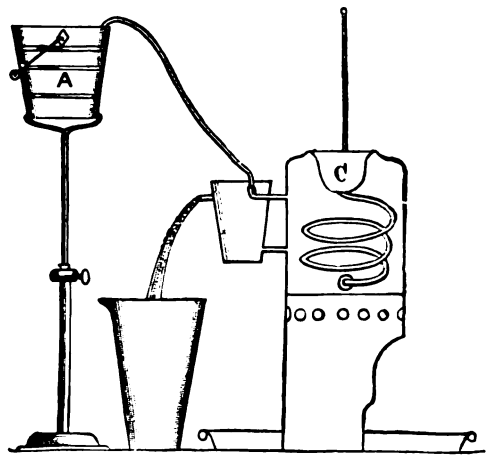

FIG. 104.—TAGLIABUE'S VISCOSIMETER.

The time required for the piston to sink a certain distance into the oil is taken as the measure of the viscosity.*

140. Stillman's Viscosimeter.—Prof. Thomas B. Stillman of Stevens Institute uses a conical vessel of copper, $6\frac{5}{8}$ inches in length and $1\frac{3}{4}$ inches greatest diameter, surrounded by a water-bath, and connected to a small branch tube of glass, which is graduated in cubic centimeters; the time taken for 25 c.c. to flow through a bottom orifice $\frac{3}{64}$ of an inch in diameter is taken as the measure of the viscosity, during which time the head changes from 6 to 5 inches. Prof. Stillman makes all comparisons with water, which is the most convenient and uniform standard. The temperature of the oil is taken at about the centre of the viscosimeter.

141. Viscosimeter with Constant Head. — A form of viscosimeter which possesses the advantage of having a constant head for flow of oil regardless of the quantity in the instrument, as made by Tinius Olsen & Co. of Philadelphia,

* See paper by Prof. Denton, Vol. IX., Transactions of Am. Society of Mechanical Engineers.

is shown in the next figure. It is simple in form and can be very readily cleaned. It is provided with a jacket, and oils may be tested at any temperature. This instrument is now the principal standard used in the Sibley College Laboratories.

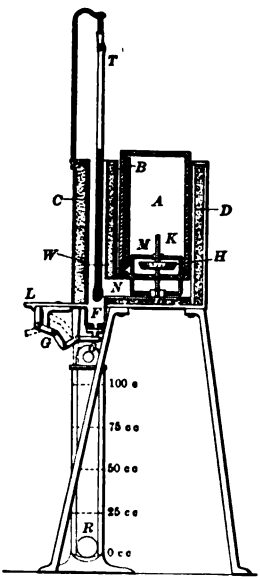

FIG. 105.—VISCOSIMETER.

Description.—*A* is a cup similar in construction to that of the kerosene reservoir of a students' lamp, with a capacity of about 125 c.c., and is surrounded with a jacket *D*, in which may be placed insulating materials to maintain a constant temperature while the oil is flowing; *C* is a thermometer-cup, to the bottom of which is secured a small cap containing the orifice *F*; *N* is a channel connecting chamber containing *A* with *C*; *B* is one of four small tubes which admit air to the interior of the cup *A* and thus maintain atmospheric pressure on oil in it; this action secures a constant level of the surface of the oil in the cup *C* and the surrounding space, at the height of the lower opening in the tube *B*. *H* is a valve to retain oil in *A* while placing it into *D*. *M* and *N* are brackets serving as guides for valve-stem *K*.

The mechanism *L*, *G*, *G* is a device for opening and closing the orifice *F* readily, and is held in a closed position by spring catch *L*.

The instrument is supported by three legs about eight inches in length.

Operation.—Withdraw cup *A*, fill it in an inverted position with the oil, hold valve *H* on its seat while reinserting the cup into its former place as seen in figure, in which latter operation the valve *H* is raised and the oil allowed to flow out of *A* until chambers *N* and *C* are filled a little above

lower opening of tube *B*. A beaker graduated in c.c.'s, of capacity of about 110 c.c., is placed under *F*; *L* is released and *G* allowed to drop, permitting oil to flow through *F* freely into the beaker. When oil in *C* falls below the bottom of tube *B*, air is admitted to the top of the oil in *A* and oil flows out until it rises a little above tube *B* again, when flow out of *A* is stopped until the level falls below *B* again. This action continues throughout entire run, intermittently but so rapidly that a constant head is maintained at *F*.

In *C* a thermometer is suspended so that its bulb is immersed in the oil, by which means the temperature of oil can be observed immediately before flowing out of orifice *F*, which is essential in ascertaining the viscosity of the oil. The oil may be heated in the viscosimeter by applying a Bunsen burner, but it is usually more conveniently heated in a separate vessel until it has attained the proper temperature.

Method of Conducting a Test.—Since water is taken as the standard of comparison, the amount of flow for 100 c.c. is first determined. Clean apparatus thoroughly, then fill *A* with water, allow 100 c.c. to flow and note time; similarly make four or five runs so as to get a fair average.

Wipe apparatus again thoroughly dry and proceed in a similar manner, using oil at different temperatures. The jacket should be heated a little with every movement of temperatures. The oil should be heated in a separate vessel and then poured into *A*.

The ratio of time of flow of a quantity of oil to time of flow of an equal quantity of water measures the relative viscosity of the given sample of oil to that of water at the given temperature. For comparing the results obtained with this instrument, the time of flow of 100 c.c. only need be known, since all the instruments are standardized.

A simple form of viscosimeter has been used with success by the author, consisting of a copper cup in form of a frustum of a cone, having dimensions as follows: bottom diameter 1.25 inches, top diameter 1.95 inches, depth 6 inches. The

flow takes place through a sharp-edged orifice in the centre of the bottom $\frac{1}{16}$ inch in diameter. The whole height is $6\frac{1}{2}$ inches. The instrument when made of copper requires a glass oil-gauge, showing the height of the oil in the viscosimeter. This should be connected to the viscosimeter 3 inches from the bottom. The time for the flow of 100 c.c. is taken as the measure of the viscosity, during which time the head changes from 6 to about 3.5 inches, the area of exposed surface diminishes at almost exactly the rate of decrease of velocity of flow, so that the fall of level is very nearly constant.

The comparative number of vibrations of a pendulum swinging freely in the air, and when immersed in an oil during a given time, is also said to afford a valuable means of determining the viscosity.

142. Viscosity Determinations of Oil, by Prof. Thomas B. Stillman.

Fluid.	Time of Flow in Seconds of 25 c.c. through Orifice as explained.				Viscosity compared with water at 20° C. (68° F.).
	20° C. 68° F.	50° C. 122° F.	100° C. 212° F.	150° C. 302° F.	
Water	15	.....	.....	.....	1.0
Prime lard-oil	55	29	19	16	3.6
No. 1 " "	70	30	18	16	4.6
Gelatine-oil	.....	.....	.....	360	
Rosin-oil, 1st run	240	80	19	15	16.0
" " 2d run	70	23	15	14	4.6
Sperm-oil	33	22	16	15	2.2
Castor-oil	39	24	17	16	2.6
Cotton-seed oil—winter	51	26	27	15	3.4
" " " summer	57	27	18	15	3.8
Rape-seed oil	71	26	20	16	4.2
Olive-oil	63	24	18	16	4.7

143. Method of measuring Viscosity.—*Apparatus.* Stop-watch and viscosimeter. Fill the jacket of the viscosimeter with water and arrange for the maintenance of the same at any desired temperature. This is most conveniently done by circulation from a water-bath. Fill the viscosimeter with the oil

to a point above the upper or initial mark. Allow the oil to run out, noting accurately with the stop-watch the exact time required to discharge a given amount. Make determinations at 60°, 100°, and 150° F., two for each temperature. Clean the apparatus thoroughly at the beginning and end of the test, using benzine or alkali to remove any traces of oil.

143. Gumming or Drying.—Gumming or drying is a conversion of the oil into a resin by a process of oxidation, and occurs after exposure of the oils to the air. In linseed and the drying oils it occurs very rapidly, and in the mineral oils very slowly.

Methods of Testing.—Nasmyth's Apparatus.—An iron plate six feet long, four inches wide, one end elevated one inch. Six or less different oils are started by means of brass tubes at the same instant from the upper end: the time taken until the oil reaches the bottom of the plane is a measure of its gumming property.

Bailey's Apparatus consists of an inclined plane, made of a glass plate, arranged so that it may be heated by boiling water. A scale and thermometer is attached to the plane. Its use is the same as the Nasmyth apparatus.

This effect may also be tested in the Standard Oil-testing Machine by applying fresh oil, making a run, and noting the friction; then exposing the axis to the effect of the air for a time, and noting the increase of friction. In all cases a comparison must be made with some standard oil.

144. The Flash-test.—*The effect of heat* is in nearly every case to increase the fluidity of oils and to lessen the viscosity; the temperature at which oils ignite, flash, boil, or congeal is often of importance.

The Flash-test determines the temperature at which oils discharge by distillation vapors which may be ignited. The test is made in two ways.

Firstly. *With the open cup.*—In this case the oil to be tested is placed in an open cup of watch-glass form, which rests on a sand-bath. The cup is so arranged that a thermometer can be kept in it. Heat is applied to the sand-bath, and as the oil

becomes heated a lighted taper or match is passed at intervals of a few seconds over the surface of the oil, and at a distance of about one half-inch from it. At the instant of flashing the temperature of the water-bath is noted, which is the temperature of the "flash-point."

Fig. 106 shows Tagliabue's form of the open cup, in which heat is applied by a spirit-lamp to a water or sand bath surrounding the cup containing the oil.

The method of applying the match is found to a have great influence on the temperature of the flash-point, and should be distinctly stated in each case. When the vapor is heavier than

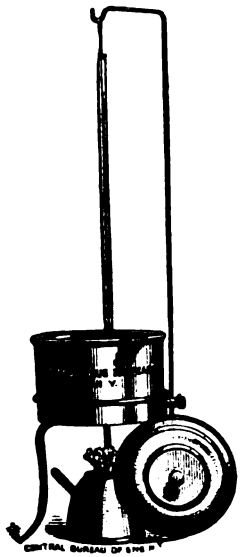

FIG. 106.—OPEN CUP.

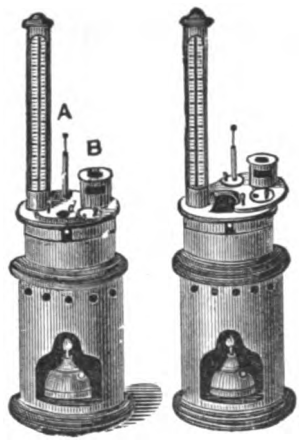

FIG. 107.—CLOSED CUP FOR FLASHING-POINT.

air, a lower flash-point will be shown by holding near one edge of the cup.

Secondly. *With the closed oil-cup.*—Fig. 107 is a view of Tagliabue's closed cup for obtaining the flash-point; in this instrument the oil is heated by a sand-bath above a lamp. The thermometer gives the temperature of the oil, and the match

applied from time to time at the orifice *d*, which in the intervals can be covered with a valve, determines the flash-point.

The open cup is generally preferred to the closed one as giving more uniform determinations, and it is also more convenient and less likely to explode than the closed one.

Method of Testing.—Put some dry sand or water in the outer cup and some of the oil to be tested in the small cup. Light the lamp and heat the oil gently—at the rate of about 50° F. in a quarter of an hour. At intervals of half a minute after a temperature of 100° F. is attained, pass a lighted match or taper slowly over the oil at a distance of one half inch at the surface. The reading of the thermometer taken immediately before the vapor ignites is the temperature of the flash-point.

With the closed cup the method is essentially the same. The lighted taper is applied to the tube leading from the oil vessel, the valve being opened only long enough for this purpose.

145. Method of Determining the Burning-point.—The *burning-point* is determined by heating the oil to such a temperature, that when the match is applied as for the flash-test the whole of the oil will take fire. The reading of the thermometer just before the match is applied is the burning-point.

With Open Cup.—Apparatus: Open cup of watch-glass form; thermometer suspended so that bulb is immersed in cup; outer vessel filled with sand or water, on which the open vessel rests; lamp to heat the outer vessel.

Method.—The burning-point is found in the same manner as the flash-point, with the open cup, the test being continued until the oil takes fire when the match is applied. The last reading of the thermometer before combustion commences is the burning-point.

146. Evaporation.—Mineral oil will lose weight by evaporation, which may be ascertained by placing a given weight in a watch-glass and exposing to the heat of a water-bath for a given time, as twelve hours. The loss denotes the existence of volatile vapors, and should not exceed 5 per cent in good oil. Other oils often gain weight by absorption of oxygen.

147. Cold Tests.—Cold tests are made to determine the behavior of oils and greases at low temperatures. The method of test is to expose the sample while in a wide-mouthed bottle or test-tube to the action of a freezing mixture, which surrounds the oil to be tested. Freezing mixtures may be made with ice and common salt, with ice alone, or with 15 parts of Glauber's salts, above which is a mixture of 5 parts muriatic acid and 5 parts of cold water. The temperature is read from a thermometer immersed in the oil. The melting-point is to be found by first freezing, then melting.

Tagliabue has a special apparatus for the cold test of oils shown in section in Fig. 108. The oil is placed in the glass

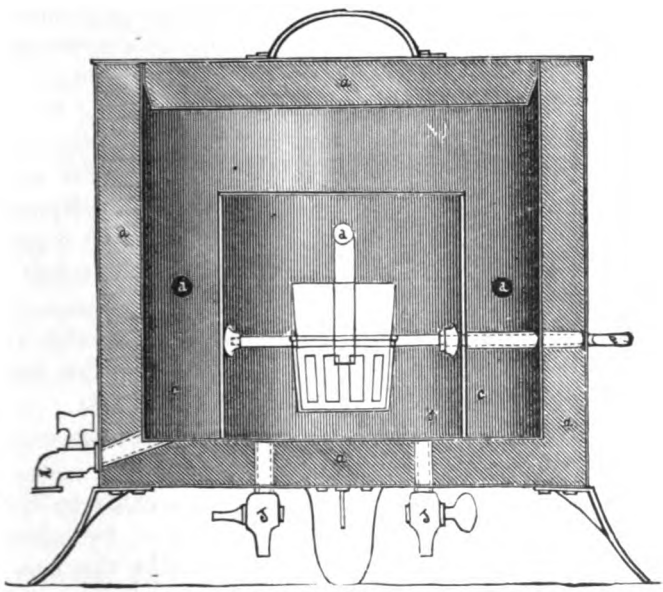

FIG. 108.—TAGLIABUE'S COLD-TEST APPARATUS.

vessel, which is surrounded with a freezing mixture. The glass containing the oil can be rocked backward and forward, to insure more thorough freezing. A thermometer is inserted into the oil and another in the surrounding air-chamber; the oil is frozen, then permitted to melt, and the temperature taken.

In making this test considerable difficulty may be experienced in determining the melting-point, since many of the oils do not suddenly freeze and thaw like water, but gradually soften, until they will finally run, and during this whole change the temperature will continue to rise. This is no doubt due to a mixture of various constituents, with different melting-points. In such a case it is recommended that an arbitrary chill-point be assumed at the temperature that is indicated by a thermometer inserted in the oil, when it has attained sufficient fluidity to run slowly from an inverted test-tube. The temperature at the beginning and end of the process of melting is to be observed.

148. Method of Finding the Chill-point.—*Apparatus.*—Test-tube thermometer, and dish containing freezing mixture.

Method.—Pour the sample to be tested in the test-tube, in which insert the thermometer; surround this with the freezing mixture, which may be composed of small particles of ice mixed with salt, with provision for draining off the water. Allow the sample to congeal, remove the test-tube from the freezing mixture, and while holding it in the hand stir it gently with the thermometer. The temperature indicated when the oil is melted is the chill-point.

In case the operation of melting is accompanied with a distinct rise of temperature, note the temperature at the beginning and also at the end of the process of melting.

In report describe apparatus used and the methods of testing.

149. Oleography.—An attempt has been made to determine the properties of oil by cohesion-figures, by allowing drops of oil to fall on the surface of water, noting the time required to produce certain characteristic figures, also by noting the peculiar form of these figures.

Electrical Conductivity is different for the different oils, and this has been proposed as a test for adulteration.

150. Acid Tests.—*Tests for acidity* may be made by observing the effects on blue litmus-paper; or better by the following method described by Dr. C. B. Dudley: Have ready (1)

a quantity of 95 per cent alcohol, to which a few grains of carbonate of soda have been added, thoroughly shaken and allowed to settle; (2) a small amount of turmeric solution; (3) caustic-potash solution of such strength that 31⅓ cubic centimeters exactly neutralize 5 c.c. of a solution of sulphuric acid and water, containing 40 milligrams H_2SO_4 per c.c. Now weigh or measure into any suitable closed vessel—a four-ounce sample bottle, for example—8.9 grams of the oil to be tested To this add about two ounces No. 1, then add a few drops No. 2, and shake thoroughly. The color becomes yellow. Then add from a burette graduated to c.c., solution No. 3 until the color changes to red, and remains so after shaking. The acid is in proportion to the amount of solution (3) required. The best oils will require only from 4 to 30 c.c. to be neutralized and become red.

COEFFICIENT OF FRICTION OF LUBRICANTS.

151. Oil-testing Machines.—*Measurements of the coefficients of friction* are made on oil-testing machines, of which various forms have been built. These machines are all species of dynamometers, which provide (1) means of measuring the total work received and that delivered, the difference being the work of friction; or (2) means of measuring the work of friction directly. Machines of the latter class are the ones commonly employed for this especial purpose.

Rankine's Oil-testing Machine.—Rankine describes two forms of apparatus for testing the lubricating properties of oil and grease.

I. *Statical Apparatus.*—This consists of a short cylindrical axle, supported on two bearings and driven by pulleys at each end. In the middle of the axle a plumber-block was rigidly connected to a mass of heavy material, forming a pendulum. The lubricant to be tested was inserted in the plumber-block attached to the pendulum, and the coefficien of friction determined by its deviation from a vertical. In this machine the axle was provided with reversing-gears, so that it

could be driven first in one direction and then in the opposite. With this class of machine, if r equal the radius of the journal, R the effective arm of the pendulum, P the total force acting on the journal, ϕ the angle with the vertical, we shall have the product of the force W into the arm $R \sin \phi$ equal to the moment of resistance Fr. That is,

$$Fr = WR \sin \phi,$$

from which

$$f = \frac{F}{P} = \frac{WR \sin \phi}{Pr}.$$

II. *Dynamic or Kinetic Apparatus.*—In this case a loose fly-wheel of the required weight is used instead of the pendulum. The bearings of journals and of fly-wheel are lubricated; then the machine is set in motion at a speed greater than the normal. The driving-power is then disengaged, and the fly-disk rotates on the stationary axis until it comes to rest. The coefficient of friction is obtained by measuring the retardation in a given time. Thus, let W equal the weight of the fly-wheel, k its radius of gyration, so that $Wk^2 \div g$ equals its moment of inertia. Let n equal number of revolutions at beginning, and n' at end of period t. Then the retardation in angular velocity per second is

$$2\pi(n - n') \div t;$$

the moment producing retardation,

$$M = \frac{2\pi(n - n')}{gt^2} Wk^2.$$

If we neglect the resistance of the air, this must equal the moment of friction fWr.

Equating these values,

$$f = \frac{2\pi(n - n')}{gt^2 r} k^2.$$

In case the moment of inertia and radius of gyration are unknown, they may be found as in Article 53, page 80.

152. Thurston's Standard Oil-testing Machine.—This machine permits variation in speed and in pressure on the journal; it also affords means of supplying oil at any time, of reading the pressure on the journal, and the friction on graduated scales attached to the instrument.

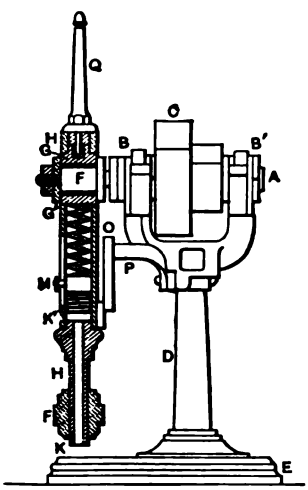

FIG. 109.—SECTION OF THURSTON'S OIL-TESTING MACHINE.

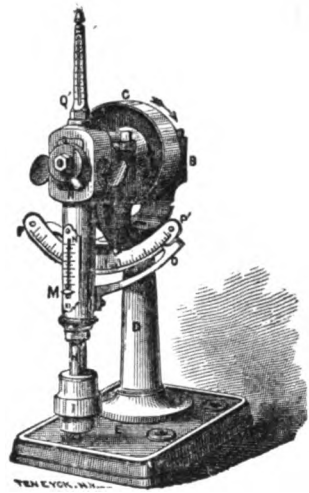

FIG. 110.—PERSPECTIVE VIEW OF THURSTON'S OIL-TESTING MACHINE.

This machine, as shown in the above cuts, Figs. 109 and 110, consists of a cone of pulleys, C, for various speeds carried between two bearings, B, B', and connected to an overhanging axis, F; on this overhanging part is a pendulum, H, with plumber-block in which the axis is free to turn; the pendulum is supported by brasses which are adjustable and which may be set to exert any given pressure by means of an adjusting screw, K', acting on a coiled spring within the pendulum. The pressure so exerted can be read directly by the scale M, attached to the pendulum; a thermometer, Q, in the upper brass gives the temperature of the bearings. The deviation

of the pendulum is measured by a graduated arc, PP', fastened to the frame of the machine. The graduations of the pendulum scale M show on one side the total pressure on the journal P, and on the other the pressure per square inch, p; those on the fixed scale, PP', show the total friction, F; this divided by the total pressure, P, gives f, the coefficient of friction.

From the construction of the machine, it is at once perceived that the pressure on the journal is made up of equal pressures due to action of the spring on upper and lower brasses, and of the pressure due to the weight of the pendulum, which acts only on the upper brass. This latter weight is often very small, in which case it can be neglected without sensible error.

153. Thurston's Railroad Lubricant-tester. — The Thurston machine is made in two sizes; the larger one, having axles and bearings of the same dimensions as those used in standard-car construction, is termed the "Railroad Lubricant Testing-machine." A form of this machine is shown in the following cut, arranged for testing with a limited supply of lubricant. (See Fig. 111.)

Explanation of symbols:

T, thermometer, giving temperature of bearings.

R, S, rubber tubes for circulation of water through the bearings.

N, burette, furnishing supply of oil.

M, siphon, controlling supply of oil.

P, candle-wicking, for feeding the oil.

H, copper rod, for receiving oil from G.

The Railroad Testing-machine, which is shown in section in Fig. 112, differs from the Standard Oil-testing Machine principally in the construction of the pendulum. This is made by screwing a wrought-iron pipe, J, which is shown by solid black shading in Fig. 112, into the head K, which embraces the journal and holds the bearings $a\,a$ in their place. In this pipe a loose piece, b, is fitted, which bears against the under journal-bearing, a'. Into the lower end of the pipe J a piece, cc, is screwed, which has a hole drilled in the centre, through which

a rod, *f*, passes, the upper end of which is screwed into a cap, *d*; between this cap and the piece *cc* a spiral spring is placed. The upper end of the rod bears against the piece *b*, which in turn bears against the bearing *a'*. The piece *b* has a key, *l*, which passes through it and the pipe *f*. This key bears

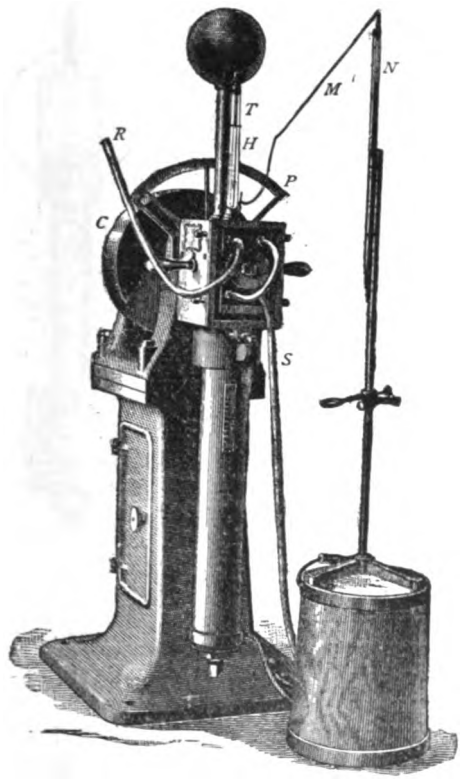

FIG. 111.—THURSTON'S RAILROAD-LUBRICANT TESTING-MACHINE.

against a nut, *o*, screwed on the pipe. By turning the nut *o* the stress on the journal produced by screwing the rod *f* can be thrown on the key *l*, and the bearing relieved of pressure, without changing the tension on the spring. A counterbalance above the pendulum is used when accurate readings are de-

sired. The "brasses" are cast hollow, and when necessary a stream of water can be passed through to take up the heat, and maintain them at an even temperature.

The graduations on the machine show on the fixed scale.

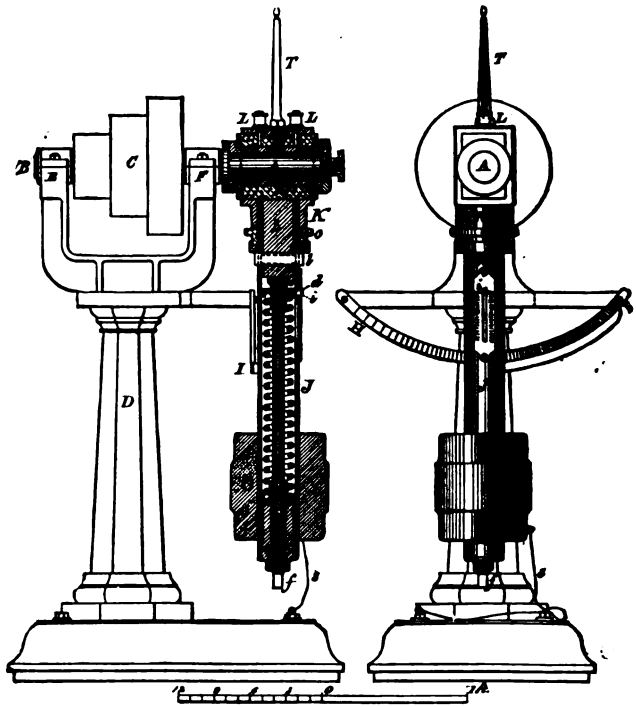

FIG. 112.—SECTION OF RAILROAD LUBRICANT TESTING-MACHINE.

as in the standard machine, the total friction; and on the pendulum, the total pressures (1) on the upper brasses, (2) on the lower brasses, and (3) the sum of these pressures.

154. Theory of the Thurston Oil-testing Machines.—The mathematical formulæ applying to these machines are as follows: Let P equal the total pressure on the journal; p the pressure per square inch on projected area of journal; T the tension of the spring; W the weight of the pendulum; r the radius of the journal; R the effective arm of the pendulum;

θ the angle of deviation of the pendulum from a vertical line; F the total force of friction; f the coefficient of friction; l the length of bearing-surface of each brass.

Since in this machine both brasses are loaded, the projected area of the journal bearing-surface is $2(2r)l = 4lr$. We shall evidently have

$$P = 2T + W, \quad . \quad . \quad . \quad . \quad . \quad . \quad . \quad . \quad (1)$$

$$p = \frac{P}{4lr} = \frac{2T + W}{4lr}. \quad . \quad . \quad . \quad . \quad . \quad . \quad . \quad (2)$$

By definition $f = F \div P$.

Since the moment of friction is equal to the external moment of forces acting,

$$Fr = Pfr = f(2T + W)r = WR \sin \theta. \quad . \quad . \quad (3)$$

From which

$$f = \frac{F}{P} = \frac{WR \sin \theta}{rP}. \quad . \quad . \quad . \quad . \quad . \quad . \quad (4)$$

In the machines $WR \sin \theta \div r$ is shown on the fixed scale, and the graduations will evidently vary with $\sin \theta$, since $WR \div r$ is constant.

P, the total pressure, is shown on the scale attached to the pendulum.

In the standard machine the weight of the pendulum is neglected, and $P = 2T$; but in the Railroad Oil-testing Machine the weight must be considered, and $P = 2T + W$, as in equation (1).

Constants of the Machine.—As the constants of the machine are likely to change with use, they should be determined before every important test, and the final results corrected accordingly.

1. To determine the constant WR, swing the pendulum to a horizontal position, as determined by a spirit-level; support it in this position by a pointed strut resting on a pair of scales. From the weight, corrected for weight of strut, get the value of WR; this should be repeated several times, and the average of these products obtained.

2. Obtain the weight of the pendulum by a number of careful weighings.

3. Measure the length and radius of the journal; compute the projected bearing-surface $2(2lr)$.

4. Compute the constant $\frac{WR}{r}$, which should equal twice the reading of the arc showing the coefficient of friction when the pendulum is at an angle of 30°, since sine of 30° equal $\frac{1}{2}$.

The following are special directions for obtaining the coefficient of friction with the Thurston machine.

155. Directions for obtaining Coefficient of Friction with Thurston's Oil-testing Machines.—*Cleaning.*—In the testing of oils great care must be taken to prevent the mixing of different samples, and in changing from one oil to another the machine must be thoroughly cleaned by the use of alkali or benzine.

In the test for coefficient of friction the loads, velocity, and temperature are kept constant for each run; the oil-supply is sufficient to keep temperature constant, the journals being generally flooded. The load is changed for each run.

The following are the special directions for the test of *Coefficient of Friction*, as followed in the Sibley College Engineering Laboratory.

Apparatus.—Thurston's Standard Lubricant Testing-machine; thermometer; attached speed-counter. (See Art. 151, page 217.)

Method.—Remove and thoroughly clean the brasses and the steel sleeve or journal by the use of benzine. Put the sleeve on the mandrel; place the brasses in the head of the pendulum and see that the pressure spring is set for zero and pressure as indicated by the pointer on the scale. Slide the

pendulum carefully over the sleeve, put on the washer, and secure it with the nut. See that the feeding apparatus is in running order. Belt up the machine for the high speed and throw on the power, at the same time supplying the oil at a rate calculated to maintain a free supply. By deflecting the pendulum and using a wrench on the nut at the bottom increase the pressure on the brasses gradually until the pointer indicates 50 lbs. per square inch.

Determine the constants of the machine as explained in Article **154**, page 222; measure the projected area of journal bearing-surface, and the weight and moment of the pendulum. Ascertain the error, if any, in the graduation of the machine, and correct the results obtained accordingly.

Make a run at this pressure, and also for pressures of 100, 150, and 200 lbs.; but do not in general permit the maximum pressure in pounds per square inch to exceed $44{,}800 \div (v + 20)$. Begin by noting the time and the reading of the revolution-counter; take readings, at intervals of one minute, of the arc and the temperature until both are constant. At the end of the run read the revolution-counter and note the time.

The velocity, v, in rubbing surface in feet per minute should be computed from the number of revolutions and circumference of the journal.

Make a second series of runs, with constant pressure and variable speed.

In report of the test state clearly the objects, describe apparatus used and method of testing.

Tabulate data, and make record of tests on the forms given.

Draw a series of curves on the same sheet, showing results of the various tests as follows:

1. With total friction as abscissæ, and pressure per square inch as ordinates; for constant speed.

2. With coefficient of friction as abscissæ, and pressure per square inch as ordinates; for constant speed.

3. With coefficient of friction as abscissæ, and velocity of rubbing in feet per minute as ordinates; pressure constant.

156. Instructions for Use of Thurston's R. R. Lubricant-tester. (See Article 152, page 218.)—Follow same directions for coefficient of friction-test as given for the standard machine, applying the pressure as explained in Article 155, page 222.

Water or oil of any desired temperature can be forced through the hollow boxes by connecting as shown in Fig. 80, page 191, and the temperature of the bearings thus maintained at any desired point. With this arrangement the machine may be used for testing cylinder-stocks, as explained in directions for using Boult's machine (see Article 161, page 231). The concise directions are:

1. Clean the machine.

2. Obtain the constants of the machine; do not trust to the graduations.

3. Make run under required conditions, which may be with each rate of speed.

a. With flooded bearings, temperature variable.

b. With flooded bearings, temperature regulated by forcing oil or water through hollow brasses.

c. Feed limited, temperature variable or temperature regulated.

In all cases the object will be to ascertain the coefficient of friction.

157. Riehlé's Oil-testing Machine.—This machine consists of an axis revolving in two brass boxes, which may be clamped more or less tightly together. The machine as shown in Fig. 113 has two scale-beams,—the lower one for the purpose of weighing the pressure put upon the journal by the hand-screw on the opposite side of the machine, the upper one for measuring the tendency of the journal to rotate. The upper scale-beam shows the total friction, or coefficient of friction, as the graduations may be arranged. A thermometer gives the temperature of the journal; a counter the number of revolutions.

Let P equal the total pressure applied to the bearings. Let B equal the projected area of the journal-bearings, p equal

the pressure per square inch; F equal the total friction; f equal

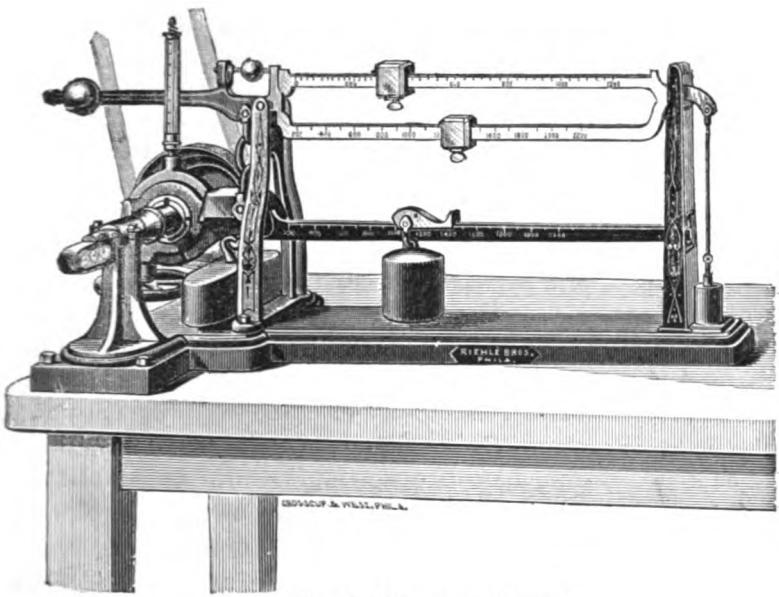

FIG. 113.—RIEHLÉ'S OIL-TESTING MACHINE.

the coefficient of friction; n equal the arm of the bearing; a the arm of the total pressure. Then do we have

$$p = \frac{P}{B}, \qquad f = \frac{F}{P},$$

$$Fn = aP = aBp,$$

$$Bfn = aP,$$

and

$$f = \frac{aP}{Bn} = \frac{ap}{n}.$$

If p be maintained constant, and $a \div n$ be made the value of the unit of graduation on the scale-beam

$$f = \text{graduation.}$$

158. Durability of Lubricants.—In this case the amount of oil supplied is limited, and it is to be used for as long a time as it will continue to cover and lubricate the journal and prevent abrasion. To give satisfactory results, this requires a limited supply or a perfectly constant rate of feed, an even distribution of the oil, and the restoration of any oil that is not used to destruction; these difficulties are serious, and present methods do not give uniform results.* The method at present used is to consider the endurance or durability proportional to the time in which a limited amount, as one fourth c.c. will continue to cover and lubricate the journal without assuming a pasty or gummy condition, and without giving a high coefficient of friction. The average of a number of runs is taken as the correct determination. In this test care must be taken not to injure the journal, and it must be put in good condition at the end of the run.

The time or number of revolutions required to raise the temperature to a fixed point—for instance, 160 F.—is in some instances considered proportional to the durability.

The Ashcroft (see Article 159, page 227) and the Boult (see Article 160, page 228) machines are especially designed for determining the durability of oils—from the former by noting the rise in temperature, from the latter by noting the change in the coefficient of friction. The difficulty of properly making this test no doubt lies in the loss of a very slight amount of oil from the journals, which is sufficient, however, to make the results very uncertain.

---

*See paper by Professor Denton, Vol. XI., p. 1013, Transactions of American Society of Mechanical Engineers.

159. Ashcroft's Oil-testing Machine.—This machine (Fig. 114) consists of an axle revolving in two brass boxes; the pressure on the axle is regulated by the heavy overhanging counterpoise shown in the engraving. The tendency to rotate is resisted by a lever which is connected to the attached gauge. The gauge is graduated to show coefficient of friction.

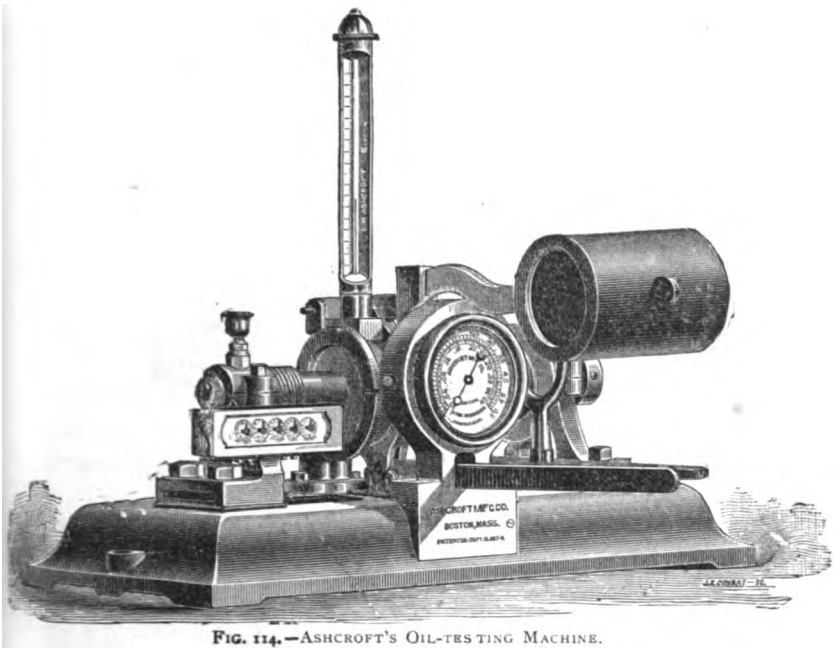

FIG. 114.—ASHCROFT'S OIL-TESTING MACHINE.

The temperature is taken by an attached thermometer, and the number of revolutions by a counter, as shown in the figure.

In this machine the weights and levers are constant, the variables being the temperature and coefficient of friction.

It is used exclusively with a limited supply of oil, the value of the oil being supposed to vary with the total number of revolutions required to raise the temperature to a given degree, —for instance, to 160° F.

160. Boult's Lubricant-testing Machine.—This machine, designed by W. S. Boult of Liverpool, is a modification of

the Thurston oil-tester, yet it differs in several essential features. A general view of the machine is shown in Fig 115, and a section of its boxes and the surrounding bush in Fig. 116.

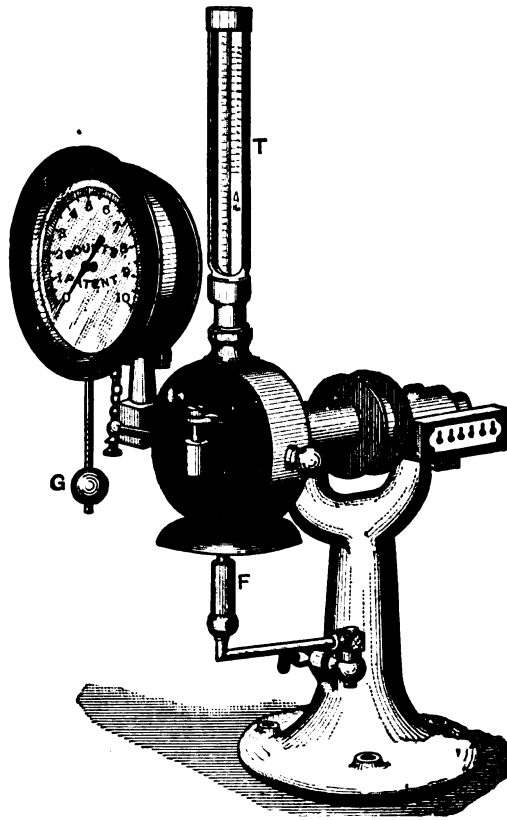

FIG. 115.—BOULT'S LUBRICANT-TESTER.

The machine is designed to accomplish the following purposes: 1. Maintaining the testing journal at any desired temperature. 2. Complete retention on the rubbing surfaces of the oil under test. 3. Application of suitable pressure to the rubbing surfaces. 4. Measurement of the friction between the rubbing surfaces.

To secure the complete retention of the oil, a complete bush with internal flanges is used instead of the brasses employed in other oil-testing machines. On the inside of the bush is an expanding journal, *DD*, Fig. 116, the parts of which are pressed outward against the surrounding bush by the springs *E*, or they may be drawn together by the set-screws *B B*, compressing the springs *E*. A limited amount of oil is fed from a pipette or graduated cylinder on the journal, with the bush removed. This oil, it is claimed, will be maintained on the outer surface of the journal and on the interior surface of the metallic bush, so that it may be used to destruction. The bush is hollow, and can be filled with water, oil, or melting ice and brine.

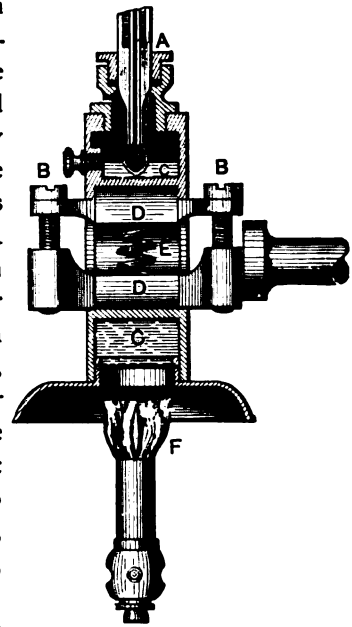

FIG. 116.—SECTION OF BOULT'S LUBRICANT TESTER.

The oil to be tested can be maintained at any desired temperature by a burner, *F*, which heats the liquid *CC* in the surrounding bush. The temperature of the journal can be read by a thermometer whose bulb is inserted in the liquid *CC*.

The friction tends to rotate the bush; this tendency is resisted by a lever connected by a chain to an axis carrying a weighted pendulum, *G*, Fig. 115.

The motion of the pendulum is communicated by gearing to a hand, passing over a dial graduated to show the total friction on the rubbing surfaces.

The formulæ for use of the instrument would be as follows: Let f equal coefficient of friction; G the weight of the bob on the pendulum, R its lever arm; α the angle made by the pendulum with the vertical; a the length of the connecting lever; c the radius of the axis to which the pendulum is

attached; r the radius of the journal; A the projected area of the journal; P the total pressure on the journal. Then

$$\frac{a}{r}\cdot\frac{R}{c}\cdot G \sin \alpha = fAP,$$

from which

$$f = \frac{aGR \sin \alpha}{rcAP} = \frac{\sin \alpha}{P}, \text{ (constant.)}$$

In this instrument the total pressure P is usually constant and equal to 68 lbs., so that the graduations on the dial must be proportional to sin α.

If the graduations are correct, the coefficient is found by dividing the readings of the dial by P (68 lbs.). The work of friction is the product of the total space travelled into the total friction, and this space in the Boult instrument is two thirds of a foot for each revolution, or two thirds of the number of revolutions.

The instrument cannot be used with a constant feed of oil, nor can the pressures be varied except by changing the springs E.

161. Directions for Durability Test of Oils with Boult's Oil-testing Machine.—To fill cylindrical oil-bath, take out the small thumb-screw in cylindrical bath and insert a bent funnel. Pour in oil—any sort of heavy oil may be used—until it overflows from the hole in which funnel is inserted, and replace thumb-screw.

1. See that the friction surfaces are perfectly clean. These can be examined by tightening the set-screws in order to depress the spring. This will enable the cylindrical bath to be lifted away. After seeing that the surfaces are perfectly clean, pour on a measured quantity of the lubricant to be tested, and reset the cylinder-bath in position. Slacken set-screws so as to allow the spring to have full pressure. The set-screws should not be removed entirely when slackening.

2. Light the Bunsen burner.

3. The thermometer indicates the temperature to which the lubricant has to be subjected in the steam-cylinder, being graduated in degrees Fahrenheit, and their equivalent in pounds pressure. Thus, if the working steam-pressure is 60 lbs., the thermometer shows that the heat of steam at that pressure is 307° Fahr.; whilst at 100 lbs. pressure its temperature is 358° Fahr., etc. Run the tester, say, until there is a rise of 50 per cent; in some cases it is preferable to run the tester until there is a rise of 100 per cent of the friction first indicated. There does not appear to be any advantage in going beyond this, as the oil is then practically unfit for further use, and there is danger of roughening the friction surfaces.

4. When it is considered desirable to ascertain the distance travelled by the friction surfaces during a test, read off the counting-indicator before and after the test, and subtract the lesser from the greater total, and the difference will represent the number of revolutions made during the test. As the friction surfaces travel two thirds of a foot during each revolution, the number of feet travelled is arrived at by simply deducting from the number of revolutions made, one third thereof.

The value of the oil is proportional to the number of feet travelled by the rubbing surfaces.

The speed at which the tester should be run should be about five to six hundred revolutions per minute. For quick-speed engine-oil the speed may be increased to about a thousand per minute.

162. Experiment with Limited Feed.—The object of this experiment is to ascertain the variation in the coefficient of friction due to a change in the rate of feed.

The experiment is to be made with the feeding apparatus arranged so that the supply can be regulated. Different runs are made with different rates of feed, and the variation in the coefficient of friction determined. Fig. 111, p. 219, represents the Thurston R. R. Lubricant-tester as arranged for the experiment, with a constantly diminishing rate of feed, by Professor G. W. Bissel. In this case oil is obtained by the siphon

M from the burette *N*, and conveyed by the candle-wicking *P* to a copper rod *H* inserted in the bearings. The rate of flow will depend upon the height of the oil in the burette *N* above the end of the siphon-tube *M*, and as the head gradually diminishes from loss of oil, the rate of flow will decrease.

The quantity of oil used is to be determined by graduations on the burette. The increase in coefficient of friction due to the constantly diminishing rate of feed is shown in Fig. 86, the coefficients of friction being shown by the dotted lines, corresponding to a given rate of feed and a given time in minutes.

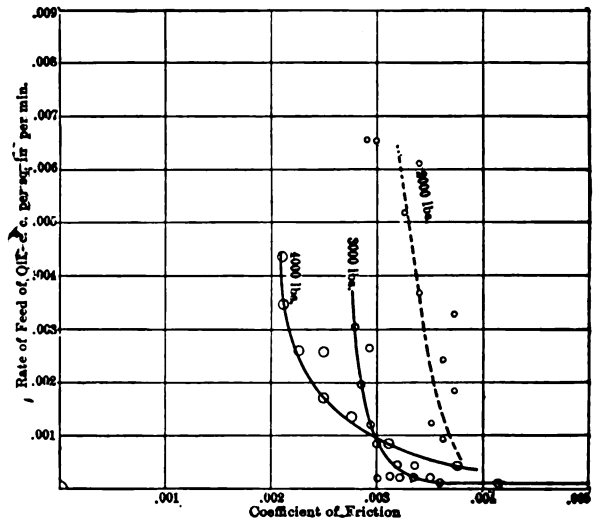

FIG. 117.

The experiment with head and feed maintained constant during each run would represent very closely the usual conditions of supplying lubricants.

In this case, provided there was no loss of oil from the journals, the experiment might show—

1. The laws of friction for ordinary lubrication.
2. The most economical rate of feed for a given lubricant.

3. The value of the lubricants on the joint basis of amount consumed and coefficient of friction.

A few tables showing coefficients of friction which has been obtained in various trials are given in the Appendix for reference.

163. Forms for Report.—The following are the forms used in Sibley College for data and results of lubricant test:

REPORT OF LUBRICANT TEST.

Name of Lubricant .....

Mark..... **Lab. No**..... **Date**.....

Source..... **Observer**.....

Investigation..... ... .

No. of test.....	.....	.....	.....	.....
Pressure on journal, lbs. per sq. inch....	.....	.....	.....	.....
Total pressure on journal, lbs.....	.....	.....	....	.....
Amount of oil used on journal, m. g.....	.....	... .	.....	.....
Average coefficient of friction.	.....	.....	.....	.....
Minimum coefficient of friction.....	.....	.....	....	.....
No. of revolutions.....	.....	.....	.....	.....
No. of feet travelled by rubbing surface..	.....	.....	.....	....
Elevation of temperature.....	.....	.....	.....	.....

Time. Minutes.	Total Revolutions.	Temperature.	Reading on Arc.	Coefficient of Friction.	Time. Minutes.	Total Revolutions.	Temperature.	Reading on Arc.	Coefficient of Friction.

VISCOSITY AND RESULTS OF OIL TEST.

Kind of oil..... **Date**.....189....

Received from.....

Color..... **Ash**.....%

Specific gravity.....° B. **Tar**.....%

" " .....water 100. **Chill-pt**.....° F.

Flashing-pt.....° F. **Loss at**... ....° F. for 3 hrs.....%

Burning-pt .....° F. **Acid**..... ...

VISCOSITY TEST.

No.	Time of Flow of 100 c.c. in Seconds.			Temperature Degrees F.	Lubricating Value Lard-oil 100.
	Sample.	Lard-oil.	Water.		
1					
2					
3					
4					
5					

RESULTS OF FRICTION TEST.

Date. ....189.	I.		II.		III.		Average.
	Temp.	Arc.	Temp.	Arc.	Temp.	Arc.	
Highest reading							
Lowest reading							
Average reading							
Drops per min							
Time of run, min.							
Speed:							
Rev. per min							
Miles per hour							
Pressure:							
Total lbs							
Per sq. in., lbs							
Coefficient of friction							

TEST FOR RESINS.

Flow on plane inclined.....degrees.

Kind of plane..... Tempt. room.....

Time in hrs., Sample....., Lard-oil....., Water.....

CHAPTER VII.

MEASUREMENT OF POWER—DYNAMOMETERS—BELT-TESTING MACHINES.

164. Classes.—Dynamometers are instruments for measuring power. They are of two classes: 1. *Absorption;* 2. *Transmission.* In the first class the work received is transformed by friction into heat and dissipated; in the second class the dynamometer absorbs only so much force as is necessary to overcome its own friction, the remainder being transmitted.

165. Absorption Dynamometer.—The Prony Brake.*—The Prony brake is the most common form of absorption dynamometer. This brake is so constructed as to absorb the work done by the machine in friction, this friction being produced by some kind of a surface connected to a stationary part, and which rubs on the revolving surface of the wheel with which it is used. The brake usually consists of a portion which can be clamped on to a wheel (see Fig. 118, page 239), with more or less pressure, and an arm or its equivalent. The part exerting pressure on the wheel is termed the *brake-strap;* the perpendicular distance from the line of action of the weight, G, to the centre of the wheel is termed the *arm* of the brake. The brake is prevented from turning by a definite load which we term G, applied at a distance equal to the length of the arm (a) from centre of motion. The work of resistance would then evidently be equal to the product of the weight of resistance, G, into the distance it would pass through

*See Engine and Boiler Trials, by R. H. Thurston, page 157; Mechanics of Materials, by I. P. Church, page 269; Du Bois' Weisbach's Mechanics of Engineering, page 13.

if free to move. If n be the number of revolutions per minute, the horse-power shown by the brake would evidently be

$$2\pi Gan \div 33000. \quad . \quad . \quad . \quad . \quad . \quad . \quad . \quad (1)$$

Brakes are made with various rubbing surfaces, and with various devices to maintain a constant resistance.

166. Stresses on the Brake-strap.—*Formulæ.*—The strains on the brake-strap are essentially the same as those on a belt, as given in Article 128, page 199.

That is, if T_1 represent the greatest tension, T_2 the least tension, c the percentage that the arc of contact bears to the whole circumference, N the normal pressure, F the resistance of the brake, f coefficient of friction,

$$T_1 - T_2 = F; \quad N = F \div f;$$

$$\frac{T_1}{T_2} = 10^{2.7288fc} = \text{Number whose log is } 2.7288fc = B.$$

$$T_1 = \frac{FB}{B-1} \quad . \quad . \quad . \quad . \quad . \quad . \quad . \quad . \quad (2)$$

$$T_2 = \frac{F}{B-1} \quad . \quad . \quad . \quad . \quad . \quad . \quad . \quad . \quad (3)$$

167. Designing a Brake.*—The actual process of designing a brake is as follows: There is given the power to be absorbed, number of revolutions, diameter and face of the brake-wheel. In case a special brake-wheel is to be designed, the area of bearing surface is to be taken so that the number obtained by multiplying the width w of the brake in inches by the velocity of the periphery v of the wheel in feet per minute, divided by

* See "Engine and Boiler Trials," by R. H. Thurston, pages 260 to 262; also, "Friction and Lubrication."

the horse-power H, shall not exceed 500 to 1000.* Call this result K. Then

$$K = \frac{wv}{H}.$$

400 to 500 is considered a good average value of K.

The value of the coefficient of friction f should be taken as the lowest value for the surfaces in contact (see table of coefficient of friction in Appendix). This coefficient is about 0.2 for wood or leather on metal, and about 0.15 for metal on metal.

Let H be the work to be transmitted in horse-power, n the number of revolutions of the brake-wheel, D its diameter; then the resistance F of the brake must be

$$F = \frac{33000H}{\pi Dn}. \quad \ldots\ldots\ldots \quad (4)$$

The arc of contact is known or assumed, and may be expressed as convenient (see Article 128) in circular measure θ, degrees α, or in percentage of the whole circumference c.

Example.—Assume the arc of contact as 180 degrees ($c = 0.5$), the diameter of brake-wheel 4 feet, coefficient of friction ($f = 0.15$), face of brake-wheel 10 inches, revolutions 90, horse-power 70. Find the safe dimensions of the brake-strap and working parts of the brake.

Then, from page 236,

$$B = 10^{2.7288/c} = 10^{0.2046}.$$

That is, B equals the number whose logarithm is 0.2046; or,

$$B = 1.602.$$

* See also "Engine and Boiler Trials," by R. H. Thurston, pp. 272 and 279.

Thus if the brake-wheel is 4 feet diameter revolving at 90 revolutions per minute: from equation (4)

$$F = \frac{(33000)(70)}{(\pi)(4)(90)} = 2043 \text{ pounds.}$$

Taking B as above, and substituting in equations (2) and (3) we have

$$T_1 = 2043\left(\frac{1.602}{.602}\right) = 5436;$$

$$T_2 = \frac{2043}{.602} = 3395;$$

$$N = \frac{2043}{.15} = 13620.$$

From the value of T_1, the maximum tension, we compute the required area of the brake-straps, using 10,000 pounds as the safe-working strain.

Section of brake-straps $= 5436 \div 10000 = 0.55$ square inch.

The assumed width of brake-wheel is 10 inches; this gives for the value of K, by equation page 237.

$$K = (10)(1132) \div 70 = 162; \quad \text{a low value.}$$

If it is proposed in this brake to use 3 straps, each 2 inches wide, the thickness will then be

$$0.55 \div 6 = 0.091 \text{ inch.}$$

To determine a convenient length of the *brake-arm*, consider equation (1) for work delivered in horse-power.

$$H = 2\pi Gan \div 33000.$$

By dividing both terms by 2π,

$$H = Gan \div 5252;$$

$$\frac{G}{H} = \frac{5252}{an}.$$

168. Brake Horse-power.—The following table will often be convenient for determining the delivered horse-power from a brake.

HORSE-POWER PER 100 REVOLUTIONS FROM A BRAKE.

Length of Brake-arm, feet.	Factor to multiply scale-reading to give horse-power, $H \div G$.	Ratio of scale-reading to horse-power, $G \div H$.
1	0.019	52.52
2	.038	26.26
3	.057	17.51
4	.076	13.13
5	.090	10.50
5.252	.100	10.00
6	.114	8.75
7	.133	7.50
8	.152	6.56
9	.172	5.83
10.504	.200	5.00

169. Different Forms of Prony Brakes.—Various forms of brakes are made. Fig. 118 shows a very simple form of

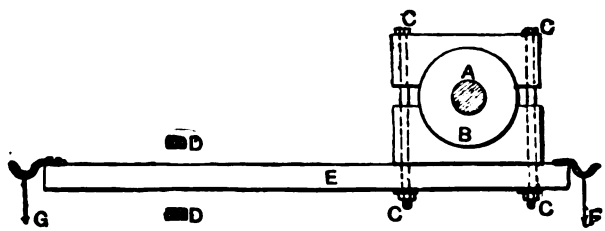

FIG. 118.—PRONY BRAKE.

Prony brake, in which the rubbing surfaces are made by two wooden beams clamped together by the bolts $C\ C$. Weight is applied to the arm E at the point G; the stops $D\ D$ prevent a great range of motion of the arm; the projection F is used to hang on sufficient counterbalance to prevent the brake from

revolving by its own arm-weight when the screws *C C* are very loose. The net load acting on the brake-arm is the difference between the weight at *G* and that at *F*, reduced to an equivalent weight acting at *G*.

Brakes are usually constructed by fastening blocks of wood, on the inside of flexible bands of iron, so as to encircle a wheel. The inside of the blocks should be fitted to the wheel, and the spaces between the blocks should be at least equal to one third the area of the block. The iron bands are connected to the brake-arm in such a manner that the tension on the wheel can readily be changed. The form of such a brake is shown in Fig. 119 attached to a portable engine.

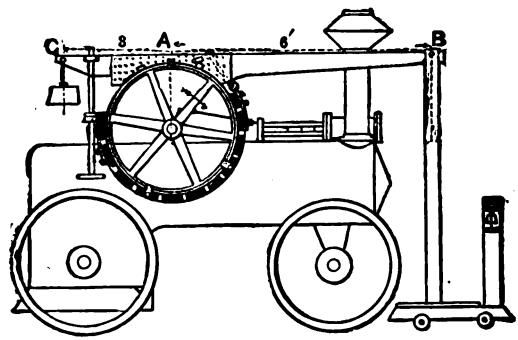

FIG. 119.—BRAKE APPLIED TO PORTABLE ENGINE.

170. Strap-brakes.—Brakes are sometimes made by taking one or more turns of a rope or strap around a wheel, as shown

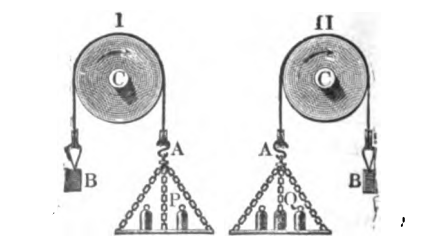

FIG. 120.—STRAP-BRAKE.

in Fig. 120. In this case weights must be hung on both sides, and since the arm of action is equal, the resultant force

acting is the difference between the two weights: that is, in the figure the resultant force is $A - B$; the equivalent space passed through is the distance travelled by any point of the circumference of the wheel in a given time. The work done is the product of these quantities.

171. Self-regulating Brakes.—Brakes with automatic regulating devices are often made; in this case the direction of motion of the wheel must be such as to lift the brake-arm. If the tension is too great the brake-arm rises a short distance, and this motion is made to operate a regulating device of some sort, lessening the tension on the brake-wheel; if the tension is not great enough, the brake-beam falls, producing the opposite effect.

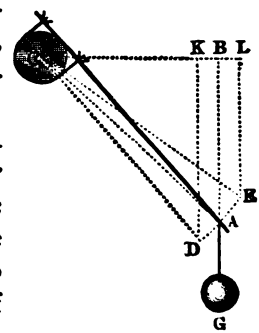

FIG. 121.—SELF-REGULATING BRAKE.

172. Brake with oblique Arm.—A very simple form of *self-regulating brake* is shown in Fig. 121: in this case the arm is maintained at an angle with the horizontal. If the friction becomes too great, the weight G rises, and the arm of the brake swings from A to E, thus increasing the lever-arm from BC to LC; if the friction diminishes, the lever-arm is correspondingly diminished, thus tending to maintain the brake in equilibrium.

173. Alden Brake.—The Alden brake (see Figs. 122 to 125) is an absorption dynamometer in which the rubbing surfaces are separated by a film of oil, and the heat is absorbed by water under pressure, which produces the friction. It is constructed by fastening a disk of cast-iron, A, Fig. 122, to the power-shaft; this disk revolves between two sheets of thin copper $E\ E$ joined at their outer edges, from which it is separated by a bath of oil. Outside the copper sheets on either side is a chamber which is connected with the water-supply at G. The water is received at G and discharged at H, thus maintaining a moderate temperature. Any pressure in the chamber causes the copper disks to press against the revolving plate, producing friction which tends to turn the copper disks. As these

are rigidly connected to the outside cast-iron casing and brake-arm P, the turning effect can be balanced and measured the same as in the ordinary Prony brake. The pressure of water is automatically regulated by a valve V, Fig. 125, which is par-

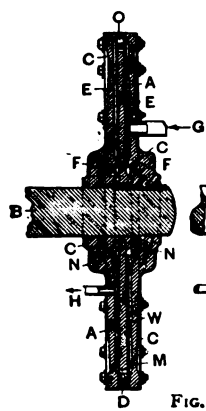

FIG. 122.—SECTION.

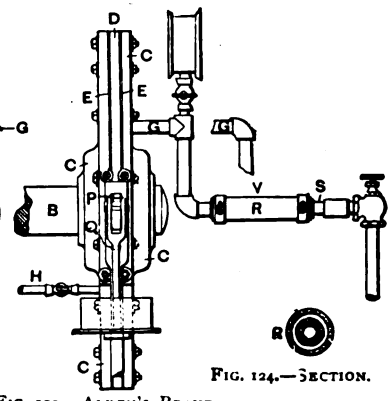

FIG. 123.—ALDEN'S BRAKE.

FIG. 124.—SECTION.

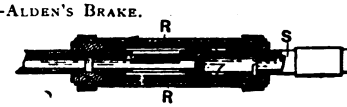

FIG. 125.—VALVE.

tially closed if the brake-arm rises above the horizontal, and is partially opened if it falls below; this brake with a constant head gives exceedingly close regulation.

174. Hydraulic Friction-brake.—The author has designed a hydraulic friction-brake that can be applied to the surface of an ordinary brake-wheel. The brake consists of a tube of copper with an oval or rectangular cross-section, which very nearly encircles the brake-wheel, and has both ends closed. The greatest dimension in its cross-section is equal to the width of the brake-wheel, and its least dimension is one half to three fourths of an inch. One end of the tube is connected with the water-supply, the other to the discharge, which can be throttled as required. Outside is a band of iron completely encircling the tube and the brake-wheel, and held rigidly together by means of bolts. To this band is fastened the brake-arm, and also one end of the copper tube. When water-pres-

sure is applied to the tube, it tends to assume a round cross-section, the shorter diameter increasing and the greater diameter diminishing. As these changes cannot take place because of the outer band of iron, pressure is exerted on the surface of the brake-wheel, and motion of the brake-wheel tends to revolve the tube and band of iron. This is resisted by the weight on the arm of the brake. The water-pressure is regulated automatically by a slight motion of the brake-arm, which closes or opens the supply-valve as is required. The arm may be permitted to act downward on a pair of scales, by interposing a spring of the requisite stiffness between it and the platform of the scales. To prevent wear of the copper tube thin sheets of iron may be interposed. A lubricant is applied by means of lubricators fixed near the ends of the tube.

175. Removal of the Heat generated by the Brake.—Various devices have been adopted to secure the removal of the heat. One method is to cast the outer rim of the brake-wheel hollow, and connect this by a tube with a cavity in the centre of the axis, so that water can be received at one end of the axis and discharged at the other. Another way is to leave a deep internal flange on the brake-wheel, and in using the brake, to supply water by means of a crooked pipe on one side and to scoop it out by a pipe with a funnel-shaped mouth bent to meet the current of water near the opposite side of the wheel. Water is sometimes run on to the surface through a hose, but aside from the inconvenience due to flying water, if any of the rubbing surfaces are of wood it is likely to make sudden and irregular variations in the coefficient of friction that are difficult to control.

176. Applying Load.—In applying the load, care must be taken that its direction is tangent to the circle that would be described by the brake-arm were it free to move. In other words, the virtual brake-arm must be considered as perpendicular to this force. If a vertical load or weight is applied, the brake-arm must be horizontal, and equal in length to the distance from this vertical line to the centre of the motion.

It will be found in general safer and more satisfactory to have the motion of the brake-wheel such as to produce a downward force, which may be measured by a pair of scales, rather than the reverse, which requires a weight to be suspended on the brake-arm. There should be a knife-edge between the brake-arm and the load; in case of downward motion, the support upon the scales, should be made the proper length to hold the brake-arm horizontal.

177. Constants of Brake.—All brakes with unbalanced arms have a tendency to turn, due to weight of the arm. This amount must be ascertained and added to or taken from the scale or load readings as required by the rotation, in order to give the correct load. To ascertain this amount, the brake may be balanced on a knife-edge, with a bearing point directly over the centre of the wheel, and the correction to the weight obtained by readings on the scale. It is obtained more accurately by making the brake loose enough to move easily on the wheel; then apply a spring-balance at the end of the arm; first pull the arm upward through an arc of about 3° either side of its central position, moving it very slowly and gradually: the reading will be the weight plus the friction. Then let it back through the same arc very slowly and gradually, and the reading will be the weight less the friction. The sum of these two results will be twice the correction for the brake-arm. Repeat this three times for an average result. In case the friction is greater than the weight this second result will be negative, but the method will remain the same.

The weight of the brake, as generally mounted, is carried on the main bearings of the wheel, from which the power is obtained, and virtually increases its weight. This may in some instances increase perceptibly the friction of the journals of the wheel, but is generally an imperceptible amount. This weight can be reduced when desired, by a counterbalance connected to the brake by means of guide-pulleys.

178. Directions for Using the Prony Brake.—1. See that the brake-wheel is rigidly fastened to the main shaft.

2. Provide ample means of lubrication.

3. If the brake-wheel has an internal rim, provide means for supplying and removing water from this rim.

4. Find the equivalent weight of brake-arm to be taken from or added to the load, depending on the direction of motion of the wheel.

5. In applying the load, tighten the brake-strap very slowly, and give time for the friction to become constant before noting readings of the result.

6. Note the time, number of revolutions, length of brake-arm, corresponding load, and calculate the results.

179. **Pump Brakes.**—A rotary pump which delivers water through an orifice that can be throttled or enlarged at will, has been used with success for absorbing power.

If the casing of the pump is mounted so as to be free to revolve, it can be held stationary by a weighted arm, and the absorbed power measured, as in the case of the Prony brake. If the casing of the pump is stationary, the work done can be measured by the weight of water discharged multiplied by the height due to the greatest velocity of its particles multiplied by a coefficient to be determined by trial.*

A special form of the pump-brake, with casing mounted so that it is free to revolve, has been used with success on the Owens College experimental engine by Osborne Reynolds. In this case the brake is practically an inverted turbine, the wheel delivering water to the guides so as to produce the maximum resistance. The water forced through the guides at one point is discharged so as to oppose the motion of the wheel at another point.

180. **Fan-brakes.**—A fan or wheel with vanes revolved in water, oil, or air will absorb work, and in many instances forms a valuable absorption-dynamometer.

The resistance to be obtained from a fan-brake is expressed by the formula †

$$Rl = lKDA\frac{V^2}{2g},$$

* See Rankine, Machinery and Mill-work, page 404.

† Ibid., page 406.

in which Rl equals the moment of resistance, V the velocity in feet per second of the centre of vane, A the area of the vane in square feet. l equals the distance from centre of vane to axis in feet, D the weight per cubic foot, of fluid in which the vane moves, K a coefficient, found by experiment by Poncelet to have the value

$$K = 1.254 + \frac{1.6244\sqrt{A}}{l - s},$$

in which s is the distance in feet from the centre of the entire vane to the centre of that half nearest the axis. When set at an angle i with the direction of motion the value for Rl must be multiplied by $\frac{2 \sin^2 i}{1 + \sin^2 i}$.

181. Traction-dynamometers.—*Dynamometers* for simple traction or pulling are usually constructed as in Fig. 126. Stress is applied at the two ends of the spring, which rotates a hand in proportion to the force exerted.

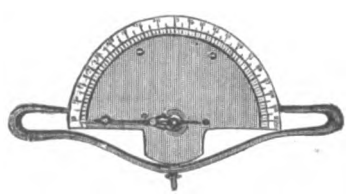

FIG. 126.—DYNAMOMETER FOR TRACTION.

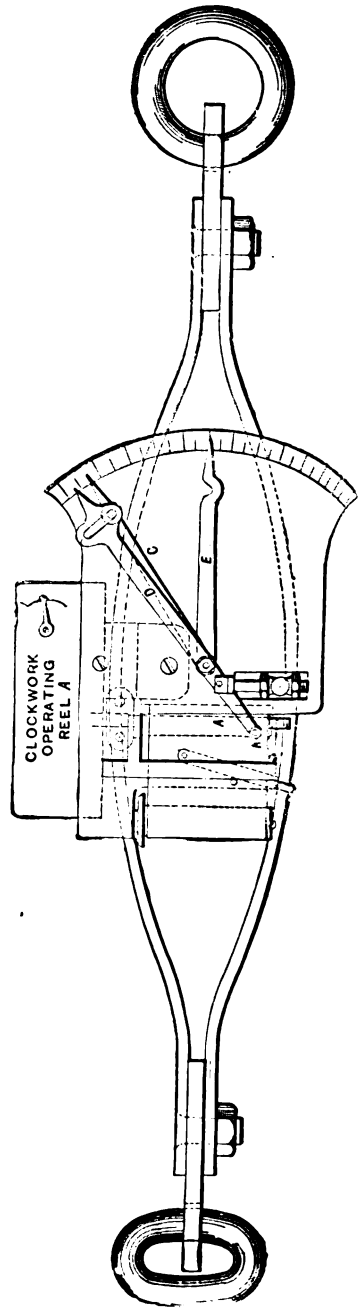

FIG. 127.—GIDDINGS' TRACTION-RECORDING DYNAMOMETER.

Recording Traction-dynamometers.—These are constructed in various forms. Fig. 127 shows a simple form of a recording traction-dynamometer, designed by C. M. Giddings. Paper is placed on the reel *A*, which is operated by clock-work; a pencil is connected at *K* to the band, and this draws a diagram, as shown in Fig. 128, the ordinates of which represent pounds

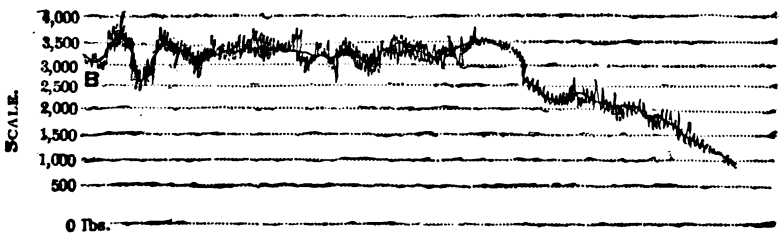

FIG. 128.—DIAGRAM FROM TRACTION-DYNAMOMETER.

of pull, the abscissæ the time. The drum may be arranged to be operated by a wheel in contact with the ground: then the abscissæ will be proportional to the space, and the area of the diagram will represent work done.

182. General Types of Transmission-dynamometers.* —Transmission-dynamometers are of different types, the object in each case being to measure the power which is received without absorbing any greater portion than is necessary to move the dynamometer. They all consist of a set of pulleys or gear-wheels, so arranged that they may be placed between the prime movers and machinery to be driven, while the power that is transmitted is generally measured by the flexure of springs or by the tendency to rotate a set of gears, which may be resisted by a lever.

183. Morin's Rotation-dynamometer.—In Morin's dynamometer, which is shown in Fig. 129, the power is transmitted through springs, *FG*, which are thereby flexed an amount proportional to the power. The flexure of the springs is recorded on paper by a pencil *z* fastened to the rim of the

* See Thurston's Engine and Boiler Trials, page 264; also Weisbach's Mechanics, Vol. II., pages 39–73; also Rankine's Steam-engine, page 42.

wheel. A second pencil is stationary with reference to the frame carrying the paper. The paper is made to pass under the pencil by means of clock-work driven by the shafting, which can be engaged or disengaged at any instant by operating the lever *R*. The springs are fastened at one end rigidly to the main axle, which is in communication with the prime mover, and at the other end to the rim of the pulley, which otherwise is free to turn on the main shaft. The power is taken from this last pulley, and this force acts to bend the

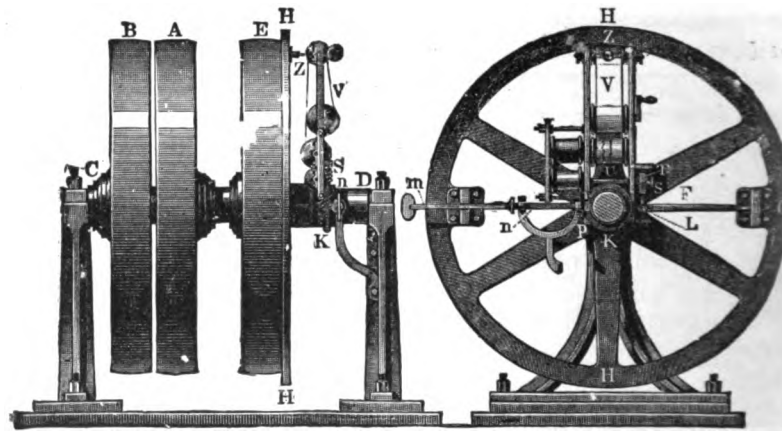

FIG. 129.—MORIN ROTATION-DYNAMOMETERS.

springs as already described. In the figure *A* is a loose pulley *B* is fixed to the shaft.

The autographic recording apparatus of the Morin dynamometer consists essentially of a drum, which is rotated by means of a worm-gear, *UK*, cut on a sleeve, which is concentric with the main axis. This sleeve slides longitudinally on the axis, and may be engaged with or disengaged from the frame at any instant by means of a lever. When this sleeve is engaged with the frame and made stationary the recording apparatus is put in motion by the concentric motion of the gearing, *SV*, with respect to the axis. The pencil attached to the spring will at this instant trace a diagram on the paper whose ordi-

nates are proportional to the force transmitted. The rate of rotation of the drums carrying the paper, with respect to the main axis, is determined in the same manner as though the gears were at rest—by finding the ratios of the radii of the respective wheels. Thus the amount of paper which passes off from one drum on to the other can be proportioned to the space passed through, so that the area of the diagram may be proportional to the work transmitted.

To find the value of the ordinates in pounds the dynamometer must be calibrated; this may be done by a dead pull of a given weight against the springs, thus obtaining the deflections for a given force; or, better, connect a Prony brake directly to the rim of the fixed pulley B, and make a series of runs with different loads on the brake, and find the corresponding values of the ordinates of the card.

184. **Calibration of the Morin Dynamometer.**—*Apparatus.*—Speed-indicator, dynamometer-paper, and Prony brake.

1. Fasten paper on the receiving drum, wind off enough to pass over the recording drum, and fasten the end securely to the winding drum. See that the gears for the autographic apparatus are in perfect order, and that both pencils give legible lines. Adjust the pencil fixed to the frame of the clock-work, so that it will draw the same line as the movable pencil, when no load is applied.

2. With the apparatus out of gear apply the power. Take a card with no load. This card will be the friction work of the dynamometer.

3. Apply power and load, take cards at intervals: these cards will represent the total work done. This, less the friction work, will be the power transmitted. The line traced by the pencil affixed to the frame of the clock-work must in all cases be considered the zero-line, or line of no work.

4. To *calibrate* the dynamometer, attach a Prony brake to the same shaft and absorb the work transmitted. This transmitted work must equal that shown by the Prony brake. Find constants of brake as explained Article 177, page 211.

5. Draw a calibration-curve, with pounds on a brake-arm,

reduced to an equivalent amount acting at a distance equal to the radius of the driving-pulley of the dynamometer, as abscissæ, and with ordinate of the diagram as ordinate. Work up the equation of this curve.

6. In report of calibration make record of time, number of revolutions brake-arm, equivalent brake-load for arm equal to radius of dynamometer-pulley, length of ordinate, scale of ordinate. Describe the apparatus.

7. In using it, insert it between the prime mover and resistance to be measured. Determine the power transmitted from the calibration.

185. Form of Report.—The following form is useful in calibrating this dynamometer:

CALIBRATION OF MORIN DYNAMOMETER.

Kind of brake used..... Length of brake-arm .....ft.
Weight of brake-arm.....lbs. Zero-reading of scales.... .....lbs.
Radius of driving-pulley.....ft. Observers.....
.....
Date.....189.. .....

No.	Revolutions per Minute.			Effective Brake-load, lbs.	Equivalent Load on Driving-pulley, lbs.	Ordinate, Inches.			Brake H. P.
	Up.	Down.	Mean.			Up.	Down.	Mean.	

Remarks: Equation of Curve,

$X =$..... $Y =$.....

186. Steelyard-dynamometer.—In this dynamometer the pressure of the axle of a revolving shaft is determined by shifting the weight G on the graduated scale-beam AC.

The power is applied at P, putting in motion the train of gear-wheels, and is delivered at Q.

Denote the applied force by P, the delivered force by Q,

the radius KM by a, KE by r, LF by r_1, NL by b, the force delivered at E by R, that at F by R_1.

We shall have

$$Rr = Pa, \quad \text{also} \quad R_1 r_1 = Qb.$$

But

$$R(ED) = R_1(FD);$$

and since

$$ED = FD,$$

$$R = R_1.$$

The resultant force $Z = R + R_1 = 2R$.

$$\therefore R = \tfrac{1}{2}Z; \qquad P = \tfrac{1}{2}Zr \div a. \qquad Q = \tfrac{1}{2}Zr_1 \div b.$$

If we know the number of revolutions, the space passed through by each force can be readily calculated, and the work found by taking the product of the force into the space passed through.

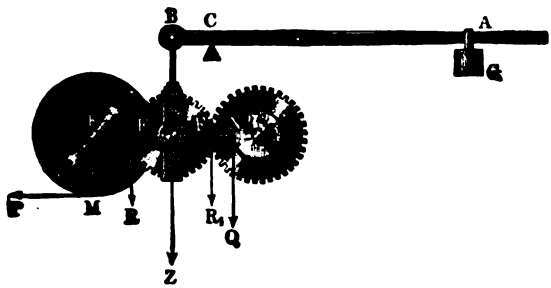

FIG. 130.—HACHETTE'S STEELYARD-DYNAMOMETER.

Consideration of Friction.—The friction of the axle and gear-teeth will increase the force R and decrease the force R_1. Let μ be the experimental coefficient expressing this friction. Then

$$P = \tfrac{1}{2}(1 + \mu)Zr \div a;$$

$$Q = \tfrac{1}{2}(1 - \mu)Zr_1 \div b;$$

$$\mu = \frac{Par_1 - Qbr}{Par_1 + Qbr}.$$

187. Pillow-block Dynamometer.—The pillow-block dynamometer operates on the same principle as the steelyard dynamometer, but no intermediate wheel is used. This dynamometer, shown in Fig. 131, consists of the fixed shaft L, which is rotated by the power Q applied at N. The power rotates the gear-wheel EL which communicates motion to the wheel KE on the same shaft with the wheel KM. This shaft is supported on a pair of weighing-scales so that the downward force Z acting on the bearing can be weighed. Let P equal the force delivered, let α equal the angle this force makes with the horizontal, let KM equal a and KE equal r, G equal the weight of shaft and wheel. The weight on the pillow-block at K must be

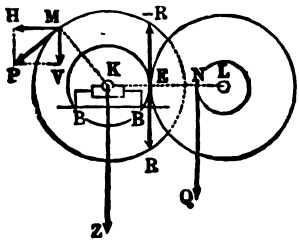

FIG. 131.—PILLOW-BLOCK DYNAMOMETER.

$$Z = G + P \sin \alpha + \frac{a}{r} P = G + P\left(\sin \alpha + \frac{a}{r}\right).$$

From which

$$P = \frac{Z - G}{\sin \alpha + \frac{a}{r}}.$$

When the belt is horizontal,

$$\alpha = 0 \quad \text{and} \quad P = (Z - G)\frac{r}{a}.$$

188. The Lewis Dynamometer.*—This transmission-dynamometer is a modified form of the pillow-block dynamometer, arranged in such a manner that the friction of the gearing or journals will not affect the reading on the weighing-scales. This dynamometer is shown in Fig. 132, and also in Fig. 39, Article 195, page 265. The dynamometer consists of two

* See Vol. VII., page 276, Trans. Am. Society Mechanical Engineers.

gear-wheels *A* and *C*, whose pitch-circles are tangent at *B*; the gear-wheel *A* is carried by the fixed frame *T*, the wheel *C* is carried on the lever *BD*: the lever *BD* is connected to the fixed frame *T* by a thin steel fulcrum, as used in the Emery Testing-machines (Article 67, page 105). The point *D*, the centre of wheel *C*, and the fulcrum are in the same right line. The fulcrum *B* permits vertical motion only of the point *D*. The point *D* rests on a pillar, which in turn is supported by a pair of scales. The shaft leading from the wheel *C* is furnished with a universal joint (see Fig. 139), so that its weight does not affect that on the journal *C*. In Fig. 132, *A* is the

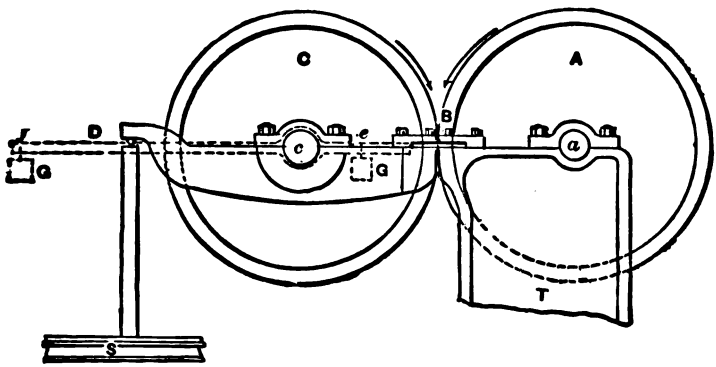

FIG. 132.—THE LEWIS DYNAMOMETER.

driving and *C* the driven wheel, the force to be measured being received on a pulley on the shaft *a*, transmitted through the dynamometer, and delivered from a pulley on the shaft *c*. From this construction it follows, that no matter how great the friction on the journals of the shaft *c*, there will be no pressure at the point *D* except what results from torsion of the shaft *c*. This will be readily seen by considering: 1. That any downward force acting at *B* will be resisted by the fixed frame *T*, and will not increase the pressure at *D*. 2. A downward force acting on the lever between *B* and *D* will produce a pressure proportional to its distance from *B*. 3. If the driven wheel *C* were firmly clamped to its frame, no force acting at *B* would change the pressure at *D*; and since

journal-friction would have the effect of partially clamping the wheel to the journal c, it would have no effect on the scale-reading at D.

Denote the transmitted torsional force by Z; the radius of the driven pulley by r; the length of lever BD by a; the scale-reading at D by W. Then from equality of moments

$$Wa = Zr, \qquad Z = \frac{Wa}{r}$$

The effective lever-arm BD is to be obtained experimentally as follows: Disconnect the universal joint, shown in Fig. 108, so as to leave the wheel C, free to turn; block the driving-pulley A; fasten a horizontal arm, ef (dotted lines, Fig. 101), to the shaft c, parallel to the line DB and carrying a weight G; balance the scales in this position, then move the weight out on the lever, until the reading of the scales is increased an amount equal to the weight moved. The distance moved by the weight will equal length of the lever DB.

Thus let ef, shown in dotted lines, represent the lever clamped to the axis c; let e represent the first position of the weight G, and f the second position; let W and W' represent the corresponding scale-readings, after balancing scales without G on the lever, ef.

Then we have

$$W = G\frac{(eB)}{DB};$$

$$W + G = W' = G\frac{(fB)}{DB}.$$

Hence

$$G = \frac{W' - W}{DB} = G\frac{(fB - eB)}{DB} = G.\frac{ef}{DB}.$$

Then will

$$DB = ef.$$

189. The Differential Dynamometer.—This is often called the Bachelder, Francis, or Webber dynamometer; was invented by Samuel White, of England, in 1780, and brought to this country by Mr. Bachelder in 1836.

The dynamometer portion consists of four bevel-gears, shown in plan in Fig. 133.

Power is applied to the pulley M, which carries the bevel-

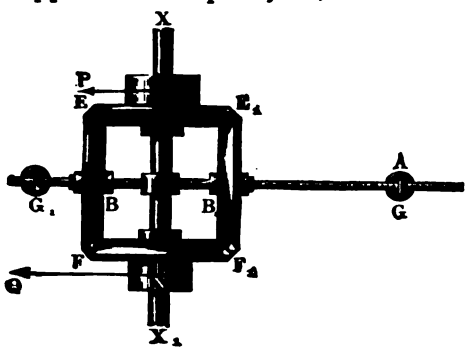

FIG. 133.—THE DIFFERENTIAL DYNAMOMETER.

wheel EE_1; the resistance is overcome by the pulley N, which carries the bevel-wheel FF_1. Both wheels run loosely upon the fixed shaft XX_1, and are connected by the wheels EF and E_1F_1. By the action of the force P and the resistance Q, the pressure of the wheels EE_1 and FF_1 is downward at E and F, and upward at E_1 and F_1, tending to swing the lever GG_1 around the axis XX_1, one half as fast as the pulley M. The weight which holds the lever-arm stationary, multiplied by the space it would pass through if free to move, is the measure of the work of the force P. A dashpot is usually attached to the lever GG_1 at G_1, to lessen vibrations and act as a counterbalance. Let Z equal the vertical force acting at B and B_1; R, the vertical pressure between the teeth at each point of contact; b, the distance of B and B_1 from the centre C; a, the distance, AC, to the weight.

Then we have evidently

$$2Z = 4R, \quad \text{or} \quad Z = 2R;$$

also

$$Ga = 2Zb = 4Rb.$$

If a' is the radius of the driving-pulley M, and r the radius of each bevel-gear,

$$Pa' = 2Rr, \quad \text{or} \quad P = \frac{2Rr}{a'} = \frac{G}{2}\frac{r}{b}\frac{a}{a'}.$$

If friction is considered,

$$P = (1+\mu)\frac{G}{2}\frac{r}{b}\frac{a}{a'}.$$

The mechanical work received is equal to P multiplied by the space passed through in the given time.

This instrument has been improved by Mr. S. Webber, as shown in Fig. 134.

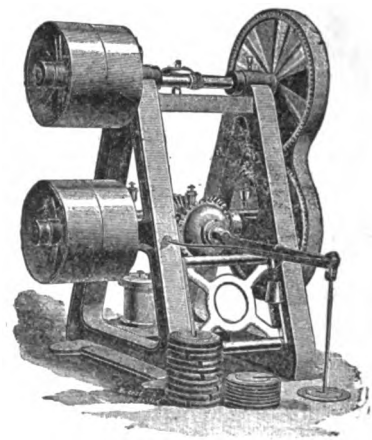

FIG. 134.—THE WEBBER DYNAMOMETER.

These dynamometers are used in substantially the same way as the Morin dynamometers.

190. Calibration of the Differential Dynamometer.—1. See that it is well oiled, in good condition, its axis horizontal, and also that the weighing arm is horizontal for no load.

2. Observe constants of the apparatus; obtain weight of small poise; of large poise; of amount to balance beam W. Measure the arm of each, and calculate the foot-pounds per 100 revolutions corresponding to weights and graduations.

3. Make a preliminary run without load, and note the reading of the poise required to balance the arm. This will determine the friction of the dynamometer without load. Determine the length of the arm, and the value of each subdivision in foot-pounds.

4. Attach a strap-brake (see Art. 169, p. 239) to the delivery pulley of the dynamometer, and absorb all the force transmitted. Make a series of ten runs, each ten minutes in length and during each of which the load on the Prony brake-arm is kept as constant as possible, but which is increased by equal increments, in the different runs. Take observations each minute during the run.

5. The difference between the work absorbed by the brake and that shown by the dynamometer should be carefully determined. It is the error of the dynamometer.

6. Note whether this error is a constant quantity, or is a percentage of the work delivered.

7. In your report, describe the apparatus, give the results of the calibration, and draw a curve, using brake foot-pounds as ordinates, and dynamometer foot-pounds as abscissæ.

8. To use the dynamometer insert it between the prime mover and the machinery to be run.

Special Directions for Calibrating the Webber Differential Dynamometer.

Apparatus required:

1. Ten small tension-weights. 2. Spring-balance or platform-scales. 3. Measuring-scale. 4. Calipers. 5. Stop-watch.

Measurements:

a. Weight of small tension-weights.
b. " " fixed poise-weights.
c. " " dynamometer-arm.
d. " " sliding poise.
e. Length of dynamometer-arm to fixed poise.
f. Length of dynamometer-arm to sliding poise.
g. Diameter of brake-pulley.
h. Thickness of brake-strap.

I. *Friction-run.*—Remove brake. Find time, in seconds, of 1000 revolutions (10 rings of bell). Balance dynamometer-arm; the reading is the "zero-reading" by the beam, and must be corrected to get the true friction-reading.

II. *Test-runs.*—Put on brake; hang one weight on its slack side. Time, 1000 revs. Read simultaneously dynamometer-arm and platform scales. Repeat the same with successive weights added.

III. *To Weigh Dynamometer-arm.*—Run by hand, first forward and then backward, weighing in each case the turning effect, with the platform-scale applied at the knife-edge of the dynamometer-arm, and sliding-poise set at the zero-mark.

191. **Form of Report.**—The following blank is used in the exercises with the differential dynamometer in Sibley College:

MECHANICAL LABORATORY, SIBLEY COLLEGE, CORNELL UNIVERSITY.

Calibration of.....Differential Dynamometer.

Kind of Brake used.....

Length of Brake-arm.....ft. Weight of Brake-arm.....lbs.

Zero-reading of Brake-scales.....lbs.

Date.....189.. Observers .....

Number.	Time of 100 Revolutions: Seconds.	Brake-tensions, Lbs.			Work in ft.-lbs. per 100 Revolutions.					Brake Horse-power.
					Dynamometer-readings.					
		Tight Side.	Slack Side.	Effective Load.	Observed on Dynamometer-beam.	Calculated from Machine Constants.	Transmitted as shown by Beam, $= W_d$	Obtained from Brake.	Error of the Dynamometer.	
		T_1	T_2	$T_1 - T_2$	W_d	W_c	$W_d - W_0$	W_b	$Wt - W$	D.H.P.
1	.....	.....	.....	.....	.....	.....	.....	.....	.....	.....
2	.....	.....	.....	.....	.....	.....	.....	.....	.....	.....
3	.....	.....	.....	.....	.....	.....	.....	.....	.....	.....
4	.....	.....	.....	.....	.....	.....	.....	.....	.....	.....
5	.....	.....	.....	.....	.....	.....	.....	.....	.....	.....
6	.....	.....	.....	.....	.....	.....	.....	.....	.....	.....
7	.....	.....	.....	.....	.....	.....	.....	.....	.....	.....
8	.....	.....	.....	.....	.....	.....	.....	.....	.....	.....
9	.....	.....	.....	.....	.....	.....	.....	.....	.....	.....
10	.....	.....	.....	.....	.....	.....	.....	.....	.....	.....

CONSTANTS OF MACHINE.

Loads at Knife-edge.	Moment Arm....ft.		Data for Beam.	Sliding Poise, Weight....lbs.	
	Weight, lbs.	Value, ft.-lbs. per 100 Revs.		Moment Arm, Feet.	Value, ft.-lbs. per 100 Revs.
Small Poise.....	.....	.....	First Notch.....	.....	.....
Large Poise.....	.....	.....	Last Notch	.....	.....
Dynamometer-beam	.....	...$=W_s$	Increase per Notch.	.....	.....
W_0=Zero-reading by Beam....ft.-lbs.			W_0+W_s=Friction-reading=...ft.-lbs.		

192. Emerson's Power-scale.—One of the most complete transmission-dynamometers is shown in Fig. 135, with attached numbers showing the dimensions of the various sizes manufactured. In this instrument the wheel C is keyed or fastened to the shaft; the wheel B is connected with the wheel C near its outer circumference by projecting studs; the amount of pressure on these studs is conveyed by bent levers to a collar, which in turn is connected with weighing-levers. Small weights are read off from the scale D, and larger ones by the weights in the scale-pan N. A dash-pot is used to prevent sudden fluctuations of the weighing-lever.

193. Form of Report.—The following forms for report and log of tests on Webber Dynamometer and Emerson's Power-scale are used by the Massachusetts Institute of Technology.

REPORT.

Test on.....

.....

No..... Date.....

WEBBER DYNAMOMETER.

No. of test.....	1	2	3
Ft.-lbs. per.....seconds.....	.....	.....	.....

EMERSON POWER-SCALE.

No. of test.....	1	2	3
Duration of test.....	.....	.....	.....
Revolutions per minute.....	.....	.....	.....
Load.....	.....	.....	.....

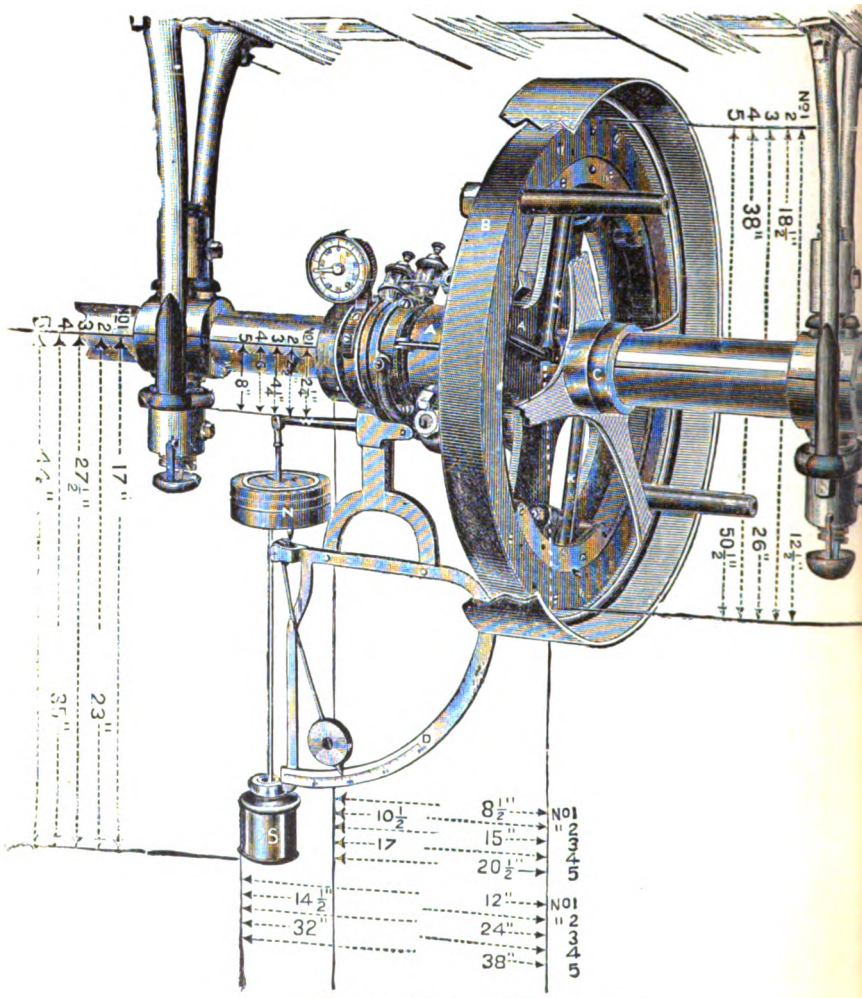

FIG. 135.—EMERSON'S POWER-SCALES.

BRAKE.

No. of test	1	2	3
Duration of test			
Revolutions			
Load on brake			
T_1			
T_2			
Circumference of brake			
Arc of contact			
Coefficient of friction			

No. of test	1	2	3	1–2	1–3	2–3
H. P. by dynamometer						
H. P. by power-scale						
H. P. by brake						

Signed.....

LOG.

Test on.....

.....

No..... Date.....

No. of Gong.	Webber Dynamometer. Time.	Time of ..... Revolutions.	Ft.-lbs. per ..... Revolutions.	Emerson Power-scale. Time.	Readings of Counter.	Revolutions per Minute.	Load.	Brake. Time.	Readings of Counter.	Revolutions per Minute.		
				Test Number 1.								

Test number	1	2	3	1–2	1–3	2–3
H. P. by dynamometer						
H. P. by power-scale						
H. P. by brake						

Constants and Remarks.

194. The Van Winkle Power-meter.—The Van Winkle Power-meter is shown in Fig. 136, complete, and with its parts

separated, in Fig. 137. It consists of a sleeve with attached plate, *B*, that can be fastened rigidly to the shaft; and a plate, *A*, which is revolved by the force communicated through

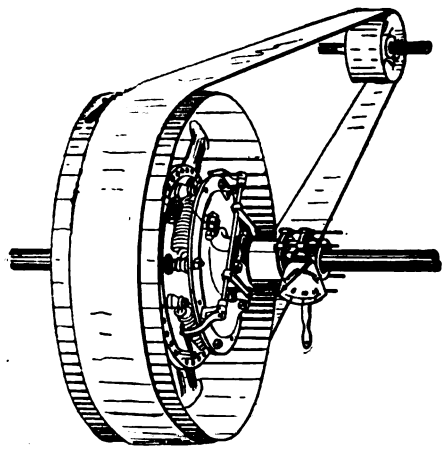

FIG. 136.—VAN WINKLE POWER-METER.

the springs *s s*. The angular position of the plate *A* with reference to *B* will vary with the force transmitted. This angular motion is utilized to operate levers, and move a loose sleeve

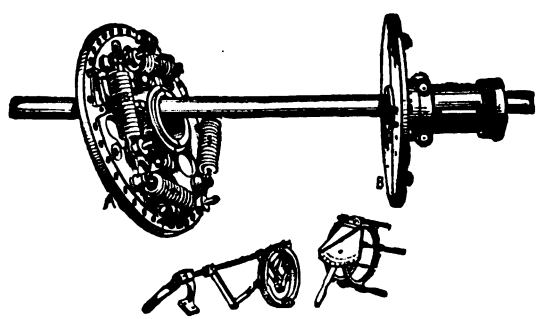

FIG. 137.—PARTS OF THE VAN WINKLE POWER-METER.

longitudinally on the shaft. The amount of motion of the sleeve, which is proportional to the force transmitted, is indicated by a hand moving over a graduated dial. The dial is graduated to show horse-power per 100 revolutions.

195. Belt-dynamometers.—Belts have been used in some instances instead of gearing in transmission-dynamometers, but because of the great loss of power due to stiffness of the belts, and to the uncertainty caused by slipping, they have not been extensively used. The following form, from Church's "Mechanics of Materials," is probably as successful as any that has been devised. It consists of a vertical plate, carrying four pulleys and a scale-pan, as shown in Fig. 138. The scale-beam is balanced, the belt then adjusted, and power turned on; a sufficient weight, G, is placed in the scale-pan to balance the plate again. Let b be the arm of the scale-pan, and a that of the forces P and P'. Then, for equilibrium,

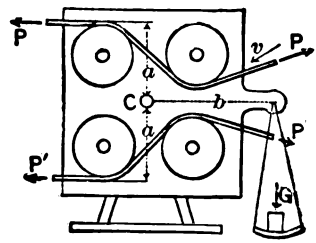

FIG. 138.—A BELT-DYNAMOMETER.

$$Gb = Pa - P'a, \quad \ldots\ldots\ldots \quad (1)$$

since P and P' on the right have no leverage about C, as the line of the belts produced intersects C. From (1)

$$P - P' = \frac{Gb}{a}. \quad \ldots\ldots\ldots \quad (2)$$

The work transmitted in foot-pounds per minute is equal to $(P - P')v$, in which v is the velocity of the belt in feet per minute to be obtained by counting. Another form employs two quarter-twist belts to revolve a shaft at right angles to the main shaft. (See Vol. XII., Transactions Am. Soc. Mechanical Engineers.)

196. Method of Testing Belts.*—The object of this test is to determine the coefficient of friction, and the power transmitted by various kinds of belting running under different conditions.

The required formulæ are given in Article 128, page 199, as follows: T_1, maximum tension; T_2, minimum tension; F, the force of friction; c, the percentage of arc of contact to whole circumference; θ, the arc of contact in circular measure We have

$$T_1 - T_2 = F;$$

$$\frac{T_1}{T_2} = e^{f\theta} = 10^{0.434 f\theta} = 10^{2.7288 fc};$$

$$\text{Common log } \frac{T_1}{T_2} = 0.434 f\theta = 2.7288 fc.$$

From which

$$f = \log\left(\frac{T_1}{T_2}\right)\frac{1}{0.434\theta} = \log\left(\frac{T_1}{T_2}\right)\frac{1}{2.7288c};$$

or

$$f = \text{Napierian log}\left(\frac{T_1}{T_2}\right)\frac{1}{\theta}.$$

Belt-testing machines must be arranged so that measures of T_1, T_2, θ, and c can be made. To determine loss due to resistance, it is necessary to supply the power by a transmission-dynamometer, and absorb that delivered by a brake.

197. The Sibley College Belt-testing Machine.—The belt-testing machine illustrated in Fig. 139 is used in the Mechanical Laboratory of Sibley College. It was designed by Wilfred Lewis of Philadelphia, and used in the tests described in Vol. VII. of Transactions of American Society of Mechanical Engineers.

The belt to be tested is placed on the pulleys E, F; power is transmitted through the pulleys P to the Lewis transmitting-

* The student is referred to papers in Transactions of American Society of Mechanical Engineers, Vol. VII., by Wilfred Lewis and Prof. G. Lanza; also to paper in Vol. XII., by Prof. G. Alden; and to the Holman tests in the Journal of the Franklin Institute, 1885.

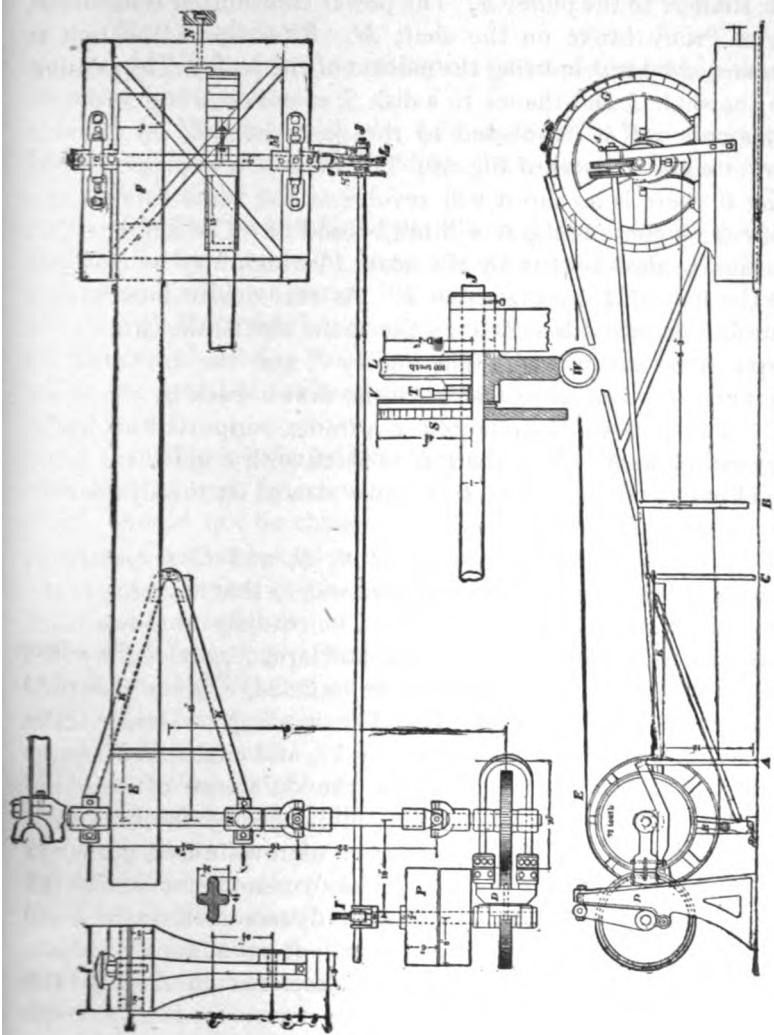

FIG. 139.—BELT-TESTING MACHINE OF SIBLEY COLLEGE.

dynamometer (see Article 188, page 252), and thence through the shaft H to the pulley E. The power transmitted is absorbed by a Prony brake on the shaft M. The slip of the belt is measured by transmitting the motion of the pulley E by gearing to the shaft I, and thence to a disk S, whose edge is graduated. The pulley F is connected to the gear-wheel L, shown in a larger scale in centre of Fig. 96. The wheel L is so proportioned that if there is no slip it will revolve at the same rate as the disk S; if there is slip it will fall behind S. The amount that it falls behind is read by the scale V, which may be clamped to the hub of L by the screw T. As this device moves only one one-hundredth as fast as the main shafts, the amount of slip can be easily read. The pulley F and the brake M are mounted on a carriage, which can be drawn back by the screw N. The pulley E is mounted in a frame, supported on knife-edges below, R. The shaft H is fitted with a universal joint, to eliminate the effect of transverse strains on the dynamometer.

Weighing-scales are placed at A, B, and C, respectively, that at A is termed the *dynamometer-scales;* that at B, the *brake-scales* that at C, the *tension-scales.* The reading on the tension-scales C, multiplied by the horizontal arm K, divided by the height d of the pulley E upon the knife-edge, gives the total tension on the belts $T_1 + T_2$. The reading on brake-scales B, divided by the arm b of the brake, and multiplied by the radius D of the pulley F, gives the difference of tensions $T_1 - T_2$. The brake-scale reading, multiplied by the brake-arm b, and by $2\pi n$, n being the number of revolutions, gives the delivered work in foot-pounds. The dynamometer scale-reading A, multiplied by the equivalent dynamometer-arm a and by $2\pi n$, gives the work received in foot-pounds. The dynamometer-arm a is to be found as described in Article 188, page 253.

198. Directions for Belt-test.

1. Before starting:

   (*a*) Get speed-indicator and log-blanks.

   (*b*) Oil all bearings and loose pulley under main belt.

(*c*) Balance scales *A* and *C*, and note their "zero-readings."

2. With test-belt off:

(*d*) Take friction-reading on scales *A* for driving-shaft, counting its revolutions.

(*e*) Weigh brake-arm (see note below) to get zero-reading of scale *B* and then remove brake from brake-pulley.

3. With brake off:

(*f*) Put on test-belt (while loose), first moving brake-shaft frame by unscrewing hand-wheel next the floor. Tighten belt to read while at rest 75 lbs. net, on scales *C*.

(*g*) Take friction-reading again on scales *A*. Count revolutions of driving-shaft and read "per cent of slip," from which the speed of brake-shaft can be calculated.

4. Run I.

(*h*) *For tension of belt:* Set scales *C* to read 50 lbs. net with belt at rest, by screwing up hand-wheel next the floor, which should not be changed during the run. Take reading of scales *C* for each load added on brake-scales *B*.

(*i*) *For power given out by belt:* Set scales *B* to read 5 lbs. "net" or effective "load," and balance by tightening brake while running. Feed a light stream of water into rim of brake-pulley. Count its revolutions.

(*k*) *For power put into belt:* Read scales *A* and take speed of driving-shaft.

(*l*) *For slip of belt:* Read graduated "slip-disk," which has 100 equal divisions. When vernier is set, it turns with the disk, and shows one per cent of slip when falling back one division during one turn of the slip-disk.

(*m*) Thus continue to increase brake-load by 5 lbs. of increments on scales *B*. Each time keep it carefully balanced, and take simultaneous readings on scales *A*, scales *B*, scales *C*, slip-disk, and revolution-counter.

5. Runs II., III., and IV.

(*n*) For run II., set tension-scales to read 75 lbs. net with belt at rest, and proceed as in run I. Increase this initial tension-reading by 25 lbs. each, for runs III. and IV.

6. Measurement of machine-constants:

(*o*) Get length in feet of (1) brake-arm, (2) dynamometer-arm, (3) arms of bell-crank acting on tension-scales, and (4) circumferences of test-belt pulleys,—latter with steel tape. Calculate diameters.

(*p*) If the pulleys differ in diameter, the reading on slip-disk, obtained while running "light" (see (*g*), above), will be the "zero" of all the slip-readings.

N.B. Shut off water at brake-pulley when it stops.

Note.—To weigh brake-arm: Loosen brake and oil face of pulley. Balance arm on scales while turning pulley first backward and again forward. The mean of the two readings will be the weight required.

199. Form of Log and Reports as used in Sibley College.

Test of Belting by.....189..

Description of Belt, Material..... Made by.....

Length.....feet. Width.....inches. Thickness.....inches.

Condition.....

Number	Time.	Revolutions, Driving pulley.	Slip, per cent.	Arc of Contact, per cent.	Scale-readings, lbs.			$B\delta+\frac{1}{2}D_1$.	$C\delta+d$	Tension on Belt, Driving side	Tension on Belt, Driven side.	Ratio of Tensions.	Coefficient of Friction.	Dynamometer, Horse-power.	Brake H. P.
					Dynamometer.	Brake.	Tension.								
		n	s	C	A	B	C	T_1-T_2	T_1+T_2	T_1	T_2	T_1+T_2	f		
1															
2															
3															
4															
5															
6															
7															
8															
9															
10															
11															
12															
13															
14															
15															
16															
17															
18															
19															
20															
Avg															

CONSTANTS OF MACHINE.

Symbol.		Results.
a	Arm of transmission-dynamometer ..... ft.	.....
b	Arm of Prony brake..... "	.....
k	Hor. arm on tension-scales ..... "	.....
d	Ver. arm on tension-scales..... "	.....
D	Diameter driving pulley. ..... in.	.....
D_1	Diameter driven pulley..... "	.....
	Face driving pulley ..... "	.....
	Face driven pulley..... ..... "	.....
	Area of bearings, driving wheel ..... sq. in.	.....
	" " " driven wheel..... " "	.....
	Weight on bearings, driving wheel..... lbs.	.....
	" " " driven wheel..... "	.....
	Kind of pulley used	.....

FORM OF REPORT.

Results of Test of.....Belting.

Made by..... .....190..

Average of Results.	Test No. I.	Test No. II.	Test No. III.	Test No. IV.
Duration of trial.....	.....	.....	.....	.....
Revolutions driving shaft	.....	.....	.....	.....
Revolutions driven shaft.....	.....	.....	.....	.....
Belt-speed, feet per minute.....	.....	.....	.....	.....
Dynamometer-scales, lbs.....	.....	.....	.....	.....
Brake-scales, lbs	.....	.....	.....	.....
Tension-scales, lbs	.....	.....	.....	.....
Circumference driving pulley.....	.....	.....	.....	.....
Circumference driven pulley.....	.....	.....	.....	.....
Dynamometer horse-power.....	.....	.....	.....	.....
Brake, horse-power.....	.....	.....	.....	.....
Difference	.....	.....	.....	.....
Slip of belt, per cent.....	.....	.....	.....	.....
Slip of belt, feet per minute	.....	.....	.....	.....
Horse-power per inch in width.....	.....	.....	.....	.....
Maximum tension, T_1.....	.....	.....	.....	.....
Minimum tension, T_2.....	.....	.....	.....	.....
$T_1 - T_2$.....	.....	.....	.....	.....
$T_1 + T_2$.....	.....	.....	.....	.....
Arc of contact, degrees.....	.....	.....	.....	.....
Coefficient of friction, per cent.....	.....	.....	.....	.....
Loss due to stiffness.....	.....	.....	.....	.....
Loss due to journal-friction.....	.....	.....	.....	.....

CHAPTER VIII.

MEASUREMENT OF LIQUIDS AND GASES.

200. Theory of the Flow of Water.—*General Formulæ of Discharge.*—The theory of the flow of water is fully investigated in Weisbach's Mechanics, Vol. I.; in Church's Mechanics of Engineering; and in the article "Hydromechanics," Encyclopædia Britannica. A very concise statement of the principles involved and formulæ required are given here, preceding the actual methods of measurement of the flow, but students are advised to consult the foregoing works. In the flow of water the particles are urged onward by gravity, or an equivalent force, and move with the same velocity as bodies falling through a height equal to the head of water exerting the pressure. If this head be represented by h, and the corresponding velocity in feet per second by v, we have, neglecting friction losses,

$$v = \sqrt{2gh}. \quad . \quad . \quad . \quad . \quad . \quad . \quad . \quad . \quad . \quad (1)$$

If we denote the area in square feet of the discharge orifice by F, the quantity discharged in cubic feet per second by Q, then, neglecting contraction.

$$Q = vF = F\sqrt{2gh}. \quad . \quad . \quad . \quad . \quad . \quad . \quad . \quad (2)$$

It is found, however, in the actual discharge of water, that, except in rare cases, 1. The actual velocity of discharge is less than the theoretical; 2. The area of the stream discharged is less than the area of the orifice through which it passes. These losses are corrected by introducing coefficients. The *coefficient*

of velocity is the ratio of the actual to the theoretical velocity, and is represented by c_v. The *coefficient of contraction* is the ratio of the least area of cross-section of the discharged stream to the area of orifice of discharge, and is denoted by c_c. The coefficient of *efflux* or *discharge* is the product of these two quantities, and is represented by c.

If v_a denotes the actual velocity of discharge, we shall have

$$v_a = c_v \sqrt{2gh}. \quad . \quad . \quad . \quad . \quad . \quad . \quad . \quad . \quad (3)$$

The coefficient c_v is to be determined by experiment; it is nearly constant for different heads with well-formed simple orifices. It often has the value 0.97. The difference between the velocity of discharge and that due to the head may be expressed in terms of the equivalent loss of head. Thus the total head producing outflow consists of a part, h_a, producing the actual velocity v_a; and a second part, h_r, expended in overcoming velocity and friction. Denote the ratio of these parts by c_r. Then

$$h_r = c_r h_a. \quad . \quad . \quad . \quad . \quad . \quad . \quad . \quad . \quad . \quad . \quad . \quad (4)$$

We also have

$$h = h_r + h_a = h_a(c_r + 1). \quad . \quad . \quad . \quad . \quad . \quad (5)$$

Hence

$$h_a = \frac{h}{c_r + 1}. \quad . \quad . \quad . \quad . \quad . \quad . \quad . \quad . \quad (6)$$

Since h_a is the head-producing velocity,

$$v_a = \sqrt{2gh_a} = \sqrt{2g\frac{h}{c_r + 1}}. \quad . \quad . \quad . \quad . \quad (7)$$

By equating (7) and (3) we obtain the relation of c_r to c_v as follows:

$$c_r = \frac{1}{c_v^2} - 1. \quad \ldots\ldots\ldots \quad (8)$$

The actual discharge

$$Q_a = cQ = cvF = cF\sqrt{2gh}. \quad \ldots\ldots \quad (9)$$

Since $c = c_v c_c$,

$$Q_a = c_v c_c F\sqrt{2gh} = c_c F\sqrt{2g\frac{h}{c_r + 1}}. \quad \ldots \quad (10)$$

From equation (9),

$$c = Q_a \div Q.$$

201. Formulæ for Flow of Water over Weirs.*—A weir is primarily a dam or obstruction over which the water is made to pass; but the term is often applied to a notch opening to the air on one side, through which the water flows. In cases where the opening is entirely below the surface, it is spoken of as a submerged weir. The *head of water* producing the flow is the distance to the surface of still water from the centre of pressure of the issuing stream. The *depth of the weir* is measured from the surface of still water to the bottom or sill of the notch.

Rectangular Notch.—Denote the coefficient of efflux by c, the depth of the weir in feet by h, the area in sq. feet enclosed by the wetted perimeter by F, and the number of cubic feet per second by Q. We have, as a formula applicable to open rectangular notches,

$$Q = \tfrac{2}{3}Fc\sqrt{2gh}. \quad \ldots\ldots\ldots \quad (11)$$

* See Church's Mechanics, page 684; Rankine's Steam-engine, p. 90; Encyc. Britannica, Vol. XII. p. 470; Bulletin on Irrigation and Use of Weirs, by Prof. L. G. Carpenter, Fort Collins, Colorado.

With most areas c increases slightly with the length and diminishes with the head; it probably depends on the ratio of wetted perimeter to area, although it is not quite constant for triangular notches, in which this ratio is a constant one. Very complete and extensive experiments were conducted by J. B. Francis at Lowell, Mass., and from these experiments he deduced the value of the coefficient of contraction to equal one tenth the head, and consequently for rectangular weirs

$$Q = \tfrac{2}{3}c(b - 0.1nh)h\sqrt{2gh}, \quad . \quad . \quad . \quad . \quad (12)$$

in which n = number of contractions. Applying this correction to an ordinary rectangular notch with two contractions, we have the well-known *Francis formula* for rectangular weirs,

$$Q = \tfrac{2}{3}c(b - 0.2h)h\sqrt{2gh} = 5.35c(b - 0.2h)h^{\frac{3}{2}}. \quad . \quad (13)$$

For heads ranging from three inches to two feet it has been found by experiment that

$$c = 0.62 \quad \text{and} \quad Q = \tfrac{10}{3}(b - 0.2h)h^{\frac{3}{2}}.$$

Triangular Notch.—For the triangular notch in which apex is down, b the base at water-level, h the depth,

$$Q = (4 + 15)cbh\sqrt{2gh} = 4.28cbh^{\frac{3}{2}}. \quad . \quad . \quad . \quad (14)$$

If the angle is 60°,

$$b = 2h\tan 30° = 1.1547h \quad \text{and} \quad Q = 2.47ch^{\frac{5}{2}}.$$

If the angle is 90°,

$$b = 2h \quad \text{and} \quad Q = \tfrac{8}{15}ch^2\sqrt{2gh}.$$

Trapezoidal Notch.—To avoid the corrections for contractions, Cippoletti of Milan in 1886 proposed to use a trape-

zoidal notch of such dimensions that the area of the stream flowing through the triangular portion should be just sufficient to correct for the contraction of the stream in a rectangular weir. The proportions of such a weir, in terms of the length at bottom of the notch, is as follows: height equal to six tenths the bottom length, width of top equal to the bottom plus one fourth the height added to either side; the tangent of the angle of inclination of the sides equal to 0.25. It is asserted that such a weir will give the discharge with an error less than one half of one per cent. The formula for the use of such a notch would be simply

$$Q = \tfrac{2}{3}cbh\sqrt{2gh} = 3.33bh^{\frac{3}{2}}. \quad . \quad . \quad . \quad . \quad (15)$$

Submerged orifices, rectangular or circular, are sometimes used for the measurement of water. The required formulæ are given in the table following.

From table in Weisbach's Mechanics, c = on the average 0.6. For small areas it diminishes with increase of head from 0.7 to 0.6, and for large areas it increases with increase of head from 0.57 to 0.60.

These formulæ are conveniently tabulated as follows:

202. Table of Formulæ for Flow over Weirs.

Form of Notch.	Depth o over sill or bottom.	Depth o over top of notch or orifice.	Width o of notch at water-level.	Average value of coefficient of discharge c.	Formula for discharge in cubic feet per second.
Rectangular:					
Usual form...	h	o	b	.63 to .58	$\frac{2}{3}cbh\sqrt{2gh}$
Francis.....	h	o	b	.622	$\frac{2}{3}ch\sqrt{2gh}(b - 0.1nh)$
Submerged...	h	h'	b		$\frac{2}{3}cb\sqrt{2g}(h^{\frac{3}{2}} - h'^{\frac{3}{2}})$
Triangular:	h	h'	b	.62	$cb(h - h')\sqrt{g(h + h')}$
	h	o	b'	.617	$\frac{4}{15}cb'h\sqrt{2gh}$
	h	o	$2h\tan\alpha$	.617	$\frac{8}{15}cbh^2\tan\alpha\sqrt{2gh}$
Ang. at b. 60°	h	o	1.1547h	.617	$2.47ch^{\frac{5}{2}}$
Ang. at b. 90°	h	o	$2h$	.617	$\frac{8}{15}bh^2\sqrt{2gh}$
Trapezoidal:					
Cippoletti's...	h	o	$b + \frac{1}{4}h$	0.629	$\frac{2}{3}cbh\sqrt{2gh}$

When still water cannot be found above the weir, and we have a velocity of approach that can be measured and is equal $v' = \sqrt{2gh'}$, we can compute h'. Then

$$Q = 5.35cb[(h + h')^{\frac{3}{2}} - h'^{\frac{3}{2}}].* \quad . \quad . \quad . \quad . \quad (16)$$

In above formula Q = discharge in cubic feet per second, b the length of sill at bottom of notch.

203. Efflux of Water through Nozzles, or Conical Converging Orifices.—In this case, if we denote least area in square feet by F, in which c'' is the coefficient of contraction, c' that of velocity, and c that of discharge,

$$Q = c'c''F\sqrt{2gh} = cF\sqrt{2gh}. \quad . \quad . \quad . \quad . \quad (17)$$

In this case the head is to be measured by a pressure-gauge attached close to the nozzle.

The value of c is a maximum when the sides of the nozzle make an angle of 13° 24′, attaining a value of 0.946. When the angle of the nozzle is 3° 10′, c = 0.895, and when 49°, c = 0.895. (See Church's Mechanics, page 692; "Hydromechanics," Encyc. Brit., page 475.)

204. Efflux of Water through Venturi Tubes or Bell-mouthed Orifices.—A conically divergent orifice, with rounded entrance to conform to the shape of the contracted vein, is now termed, from the first experimenter, *Venturi's tube.* The dimensions of such a tube, as given in Encyc. Britannica, Vol. XII., page 463, are as follows, in terms of the small diameter (d). Large diameter (D) at opening equals $1.25d$; length equals $.625d$, or $.5D$. The sides are in section a circular arc, struck with a radius of $1.625d$, from a centre in the line of (a) produced.

---

* Rankine's Steam-engine. Hamilton Smith writes formula

$$Q = 5.35cb(h + 1\tfrac{1}{2}h)^{\frac{3}{2}}.$$

The formula of discharge is

$$Q = c' F \sqrt{2gh}, \quad \ldots \ldots \quad (18)$$

in which F is the least area, h the head to be measured by a pressure-gauge attached to the pipe before the area of cross-section is reduced, c' the coefficient of velocity. The coefficient of contraction in this case is equal to one. Weisbach gives the value of c' as .959, .975, and .994 for heads respectively 2 feet, 40 feet, and 160 to 1000 feet.

Prof. Church, in his Mechanics, page 694, describes an experiment on a conically divergent tube 3 inches long, .8 inch diameter at least section.

Coefficient of discharge with heads from 2 to 4 feet varied from .901 to .914.

205. Flow of Water under Pressure.—The pressure exerted by flowing water in pipes is very different from that due to still water under the same head. The pressure follows more or less closely the law enunciated in the theorem of Bernouilli, which may be stated in a general form as follows: "*The external and internal work done on a mass is equal to the change of kinetic energy produced;*" that is, the total energy of a flowing stream remains constant except for losses due to friction.

In the flow of water through a pipe with varying cross-section the velocity of flow will be very nearly inversely as the area of cross-section. Since the energy or product of pressure and velocity is nearly constant by Bernouilli's theorem, as the velocity increases the pressure must diminish, and we shall find least pressure at the points where the cross-sections are least. From some experiments made by the author, the same law of varying pressure with varying cross-section applies in a less degree to the flow of steam through a pipe.* The formula expressing Bernouilli's theorem, neglecting friction, is

$$\frac{v^2}{2g} + \frac{p}{\gamma} + z = \text{constant};$$

* See "Hydromechanics," Encyc. Britannica, page 468.

in which $v^2 \div 2g$ is the velocity-head, p is the pressure per square foot, γ the weight per cubic foot; so that $p \div \gamma$ is the pressure-head, and z the potential head, or vertical distance from any horizontal reference line.

206. Flow of Water in Circular Pipes.*—In this case there is a loss of head, h', due to friction. Denote the sine of the angle of inclination by i, diameter by d, length by L, loss of head by h_f', all in feet coefficient of loss of head by ζ.

$$h_f' = \zeta \frac{4L}{d} \frac{v^2}{2g}. \quad \ldots\ldots\ldots \quad (19)$$

From experiments of Darcy,

$$\zeta = 0.005\left(1 + \frac{1}{12d}\right) \quad \text{for clean pipes;}$$

$$\zeta = 0.01\left(1 + \frac{1}{12d}\right) \quad \text{for incrusted pipes;}$$

$$\zeta = 0.a\left(1 + \frac{1}{12d}\right) \quad \text{in general;}$$

$$v = \sqrt{\frac{g}{2\zeta} di}; \quad \ldots\ldots\ldots \quad (20)$$

$$Q = \frac{\pi}{4} d^2 v. \quad \ldots\ldots\ldots \quad (21)$$

Loss of Head at Elbows.—In this case the loss is principally due to contraction. Weisbach gives the following formulæ:

$$h_e' = \zeta_e \frac{v^2}{2g}. \quad \ldots\ldots\ldots \quad (22)$$

---

* See "Hydromechanics," Encyc. Britannica.

If ϕ equal the exterior angle,

$$\zeta_e = 0.9457 \sin^2 \frac{\phi}{2} + 2.047 \sin^4 \frac{\phi}{2} \quad . \quad . \quad . \quad (23)$$

From this are deduced the following values:

ϕ	20°	40°	60°	80°	90°	100°	110°	120°	130°
ζ_e	0.046	0.139	0.364	0.740	0.984	1.26	1.556	1.861	2.158

For pipes neatly bent the value of ζ_e is much less.

By equating h_f' and h_e' in equations (19) and (22), a length of pipe can be found which will produce a loss of head equivalent to that produced by any given elbow. We shall have this additional length:

$$L = \frac{\zeta_e d}{4\zeta} \quad . \quad . \quad . \quad . \quad . \quad . \quad . \quad . \quad (24)$$

On substituting the values of ζ_e as above, and ζ as equal to 0.006, this additional length will be found not to vary much from 40 diameters for each 90° elbow, and 7 diameters for each 45° elbow.

Loss of Head on entering a Pipe.—This loss is very small when a special bell-mouthed entrance is used, but is great in other cases. The loss of head in entering a straight tube is expressed by the formula

$$h_e' = \zeta_e \frac{v^2}{2g} \quad . \quad . \quad . \quad . \quad . \quad . \quad (25$$

Weisbach found $\zeta_c = 0.505$. By making h_f' of equation (19) equal to h_a', and reducing, we find the additional length, L, of straight pipe producing the same loss of head.

$$L = \frac{\zeta_c d}{4\zeta}.$$

Assuming ζ has an average value of 0.006, and ζ_c as above,

$$L = 20d.$$

Loss of Head by abrupt Contraction of Pipe.—In this case Weisbach found

$$h_m' = 0.316\frac{v^2}{2g},$$

which would correspond to an additional length of pipe equal to about 13 diameters. When the mouth of the contracted pipe is reduced by an aperture smaller than the pipe, Weisbach found the following values of ζ_c. In the table, F_1 is area of orifice, F_2 that of pipe into which the flow takes place.

$F_1 + F_2$	0.1	0.2	0.3	0.4	0.5	0.6	0.8	1.0
ζ_c	0.016	0.614	0.612	0.610	0.607	0.605	0.601	0.596
ζ	231.7	50.99	19.78	9.612	5.256	3.077	1.169	0.480
L	950d	212d	82d	40d	22d	13d	5d	2d

Globe valves produce about one half more resistance than a right-angled elbow, or an amount equal to an additional length of about 60 diameters.

207. Loss of Head in flowing through a Perforated Diaphragm in a Tube of Uniform Section.—Let F_1 be the area of the orifice, F that of the pipe in square feet, ζ the coefficient of discharge, c the coefficient of contraction.

The loss of head in feet

$$h_c = \left(\frac{F}{cF_1} - 1\right)^2 \frac{v_2}{2g} = \zeta \frac{v^2}{2g}; \quad \ldots \quad (26)$$

$$\zeta = \left(\frac{F}{cF_1} - 1\right)^2.$$

Weisbach gives the following values as the results of experiments:

$\frac{F_1}{F}$	0.1	0.2	0.3	0.4	0.5	0.6	0.7	0.8	0.9	1.0
c_c	0.624	0.632	0.643	0.659	0.681	0.712	0.755	0.813	0.892	1.0
ζ	225.9	47.77	30.83	7.801	1.753	1.796	0.797	0.290	0.060	0.0

208. Volume flowing through a Perforated Diaphragm.—Let H_a represent the head in feet on side of greatest pressure, and H_b that on the opposite side.

The loss of head

$$h_c = H_a - H_b.$$

From equation (26), by transposing and substituting,

$$v = \sqrt{\frac{2gh_c}{\zeta}} = \sqrt{\frac{2g}{\zeta}(H_a - H_b)}. \quad \ldots \quad (27)$$

The quantity discharged in cubic feet per second,

$$Q = F_2 v = F_1 \sqrt{\frac{2g}{\zeta}(H_a - H_b)}. \quad \ldots \quad (28)$$

From this

$$\zeta = \frac{2F_1^2 g}{Q^2} h_c. \quad \ldots \quad (28a)$$

209. Measurements of the Flow of Water.—*General Methods.*—The measurement of the flow of water is of importance in connection with efficiency-tests of pumps, water-meters, and steam-engines, as well as in determining the amount of water that can be obtained from a given stream.

The methods used for measurement of the flow usually consist in making the water pass through open notches over weirs, through standard orifices or nozzles, or through meters.

The coefficients that have been given are in every case to be considered approximations only, and should be tested by actual measurement under the conditions of use.

The head of water is the distance from the centre of pressure to the surface of still water under atmospheric pressure. In case the water is under pressure and at rest, this head can be measured by a calibrated pressure-gauge. The gauge is usually graduated to show pressure in pounds per square inch, each pound being equivalent to a head of 2.307 feet of water at a temperature of 70° Fahr., or to 2.037 inches of mercury.

In case the water-pressure is read in inches of mercury, one inch of mercury corresponds to a head equal to 1.113 feet.

A convenient table, showing relation of pounds of pressure-head in feet of water or inches of mercury, will be found in Article 260.

210. Flow of Water over Weirs.—*Methods of measuring the Head.*—The head is measured most accurately by the use of the hook-gauge, used first by Mr. U. Boyden of Boston in 1840. Many of the English engineers still depend on the use of floats. The head in all cases is to be measured at a distance sufficiently back from the weir to insure a surface which is unaffected by the flow. The channel above the weir must be of sufficient depth and width to secure comparatively still water. The addition of baffle-plates, some near the surface and some near the bottom, under or over which the water must flow, or the introduction of screens of wire-netting, serves to check the current to great extent. Such an arrangement is sometimes called a tumbling-bay.

The object of the baffle-plates is to secure still water for the

accurate measurement of height of the surface above the sill of the weir. The same object can be accomplished by connecting a box or vessel to the water above the weir by a small pipe entering near the bottom of the vessel; the water will stand in this vessel at the same height as that above the weir, and will be disturbed but little by waves or eddies in the main channel. The height of water is then obtained from that in the vessel. Prof. I. P. Church has the connecting-pipe pass over the top of the vessel and arranged so as to act as a siphon.

FIG. 140. HOOK-GAUGE.

The Hook-gauge.—This consists of a sharp-pointed hook attached to a vernier scale, as shown in Fig. 140, in such a manner that the amount it is raised or lowered can be accurately measured. To use it, the hook is submerged, then slowly raised to break the surface. The correct height is the reading the instant the hook pierces the surface. To obtain the head of water flowing over the weir, set the point of the hook at the same level as the sill of the weir. The reading taken in this position will correspond to the zero-head, and is to be subtracted from all other readings to give the head of the water flowing over the weir.

In some forms of the hook-gauge the zero of the main scale can be adjusted to correspond to the zero-head, or level of the sill of the weir.

Floats.—Floats are sometimes used: they are made of hollow metallic vessels, or painted blocks of wood or cork, and carry a vertical stem; on the stem is an index-hand or pointer that moves over a graduated scale.

211. Conditions affecting the Accuracy of Weirs.—1. The weir must be preceded by a straight channel of constant cross-section, with its axis passing through the middle of the weir and perpendicular to it, of sufficient length to secure uniform velocity without internal agitation or eddies.

2. The opening itself must have a sharp edge on the up-

stream face, and the walls cut away so that the thickness shall not exceed one tenth the depth of the overflow.

3. The distance of the sill or bottom of the weir from the bottom of the canal shall be at least three times the depth on the weir, and the ends of the sill must be at least twice the depth on the weir from the sides of the canal.

4. The length of the weir perpendicular to the current shall be three or four times the depth of the water.

5. The velocity of approach must be small; for small weirs it should be less than 6 inches per second. This requires the channel of approach to be much longer than the weir opening.

4. The layer of falling water should be perfectly free from the walls below the weir, in order that air may freely circulate underneath.

5. The depth of the water should be measured with accuracy, at a point back from the weir unaffected by the suction of the flow and by the action of waves or winds.

6. The sill should be horizontal, the plane of the notch vertical.

212. Effect of Disturbing Causes and Error in Weir Measurements.—1. Incorrect measurement of head. This may increase or decrease the computed flow, as the error is a positive or negative quantity.

2. Obliquity of weir; the effect of this or of eddies is to retard the flow.

3. Velocity of approach too great, sides and bottom too near the crest, contraction incomplete, crest not perfectly sharp, or water clinging to the outside of the weir, tend in each case to increase the discharge.

The causes tending to increase the discharge evidently outnumber those decreasing it, and are, all things being taken into account, more difficult to overcome.

213. Water-meters.—The water-meter is an instrument for measuring the amount of water flowing through a pipe. Knight makes seven distinct classes of water-meters, as follows:*

* Knight's Mechanical Dictionary, Vol. III.

1. Those in which the water rotates a horizontal case, or a horizontal wheel in a fixed case, delivering a definite amount at each rotation.

2. A piston or wheel made to rotate by the pressure of the water, the meter in this case being the converse of the rotary engine or pump.

3. A screw made to rotate by the motion of the water.

4. A reciprocating piston in a cylinder of known capacity driven backward and forward by the pressure of the water.

5. The pulsating diaphragm, in a vessel of known capacity, which is moved alternately as the side chambers are filled and emptied.

6. The bucket and balance-beam, in which the buckets of known capacity on the ends of the beam, are alternately presented to catch the water and are depressed and emptied as they become filled.

7. The meter-wheel, in which chambers of known capacity are alternately filled and discharged as the wheel rotates.

Besides these seven classes, it is evident that any machine may be used in which the motion is proportional to the velocity of flow of water.

These classes can be united into two general classes: I. Positive; II. Inferential. In class I. the water cannot pass without moving the mechanism, and meters of this kind are considered more delicate and accurate than those in class II.

Each class of meter has a registering apparatus, which in general consists of a series of gear-wheels, so arranged as to move a hand continuously around a graduated dial, from which the volume can be read.

214. Errors of Water-meters.—In addition to the constant errors of graduation, meters are liable to be clogged by dirt, to be affected by air in the water, and by change in the temperature, head, or quantity of discharge of the water passing through.

While the meter is no doubt of sufficient accuracy for commercial purposes, it should be used with caution in the measurement of water for tests or for purposes of scientific investiga-

tion. Before and after such tests a careful calibration of the meter should be made under the exact conditions of the test.

The following directions explain the method of calibrating the weir notch and meter, arranged in series. In this experiment the water is to be weighed. Either instrument may be calibrated separately. In case the weir has been calibrated, the meter could be calibrated by direct comparison, without the use of weighing-scales.

215. Directions for Calibrating the Weir Notch and Meter.—The object of this experiment is to determine the coefficient c of formula (9), Article 201, page 272, and the accuracy of previous determinations.

Apparatus needed.—Hook-gauge, pair of scales, thermometer, spirit-level, pressure-gauge, weir, and meter.

1. Accurately level the sill of the weir, and see that the notch is in a truly vertical plane.

2. Take the zero-reading of the hook-gauge, by setting the point of the hook with a spirit-level, at the same height as the sill of the notch. In case the form of the notch is such as to prevent the use of the spirit-level, grease the edge of the notch and set the hook by the water-level; being sure that the water surface does not, through capillary action, rise above the lower edge of the notch.

3. Start the water flowing, and after it has obtained a constant rate, take measurements of weights and of head. The commencement of the experiment to be determined by the rising of the poise on the scale-beam, which previously must be set at a given weight. Note the time, scale-reading, thermometer-reading, reading of the hook-gauge at the beginning and once in five minutes during the run. As the experiment approaches the end set the poise of the scale-beam in advance of the weight, terminate the run when the beam rises, accurately noting the time, weight, thermometer-reading, and reading of the hook-gauge. Make direct measurements of the coefficient of contraction. Calculate coefficient of discharge.

4. If the water to the weir first passes through a meter, take corresponding readings of the meter-dial. Note the pressure

and temperature at the meter. Calculate the number of cubic feet.

5. Draw on cross-section paper a curve of discharge, in which cubic feet per second are taken as abscissæ and the corresponding heads as ordinates. Also draw in dotted lines on the same sheet a curve of coefficients, of discharge in which coefficients are taken as abscissæ, and corresponding heads as ordinates. Also, draw a curve showing error of meter for each head.

216. Form of Report.—The following form has been used by the author for calibration of the weir notch and meter:

CALIBRATION OF WEIR NOTCH AND METER.

Made by..... .....

at..... ..... **Date**.....

Number of Run.	I.	II.	III.	IV.	V.
Duration, minutes.....					
Temperature discharge, deg. F.....					
Readings of hook-gauge—Zero .....ft.					
" " " Max.....ft.					
" " " Min.....ft.					
" " " Av.....ft.					
Weight of water—Beginning (tare).....lbs.					
" " End of run.....lbs.					
" " Total .....lbs.					
Cubic feet per second.....Q.					
Contraction gauge—Beginning .....ft.					
" " End.....ft.					
Area—Wetted orifice.....sq. ft.					
" Contracted section.....sq. ft.					
Coefficients—Contraction, c_c.....					
" Discharge, c.....					
" Velocity, c_v.....					
" Loss of head, c_r.....					
Meter—Beginning.....					
" End.....					
" Difference.....					
" Cubic feet per second.....					
" Error per cent.....					
" Pressure-gauge, lbs.....					
" Thermometer, F°.....					

Constants of Weir, Form ..... Length... ....ft. Angle of sides.....

Remarks .....

Meter, manf. by ..... **General class**..... No....

Remarks..... ..... **Formulæ:** $c = c_c c_v$, $c_r = \frac{1}{c_v} - 1$.

217. Calibration of Nozzles and Venturi Tubes.—These are often more convenient to use than weir-notches, in the measurement of the efflux of water. Before using these they should be carefully calibrated by measurements of the head and discharge. The *Venturi tube* is sometimes inserted in a length of pipe; in this case the pressure should be observed on either side of the tube, and the discharge measured. The special directions for calibrating when discharging into the air would be as follows:

1. Arrange the *nozzle* or *Venturi tube*, so that the discharge can be caught in tanks and measured or weighed.

2. Attach a pressure-gauge, which has been previously calibrated, to the pipe near the nozzle. Since the pressure is a function of the area of cross-section, the position of the gauge should be described and the area of the cross-section at that point measured.

3. Make careful measurements of least and greatest internal diameters of nozzles, of length of nozzle, and note condition of interior surface. Make sketch showing the form.

4. Make five runs, as explained in directions for calibrating weir-notches, Article 215, page 285, obtaining weight of water by the same method. In case it is not convenient to weigh the water, discharge into tanks which have been carefully calibrated by weighing, arranged so that one is emptying while the other is filling.

5. Observe during run, reading of pressure-gauge, temperature of discharge-water, weight of discharged water. Compute corresponding head producing flow, volume of discharged water, and the coefficient of discharge in the formula

$$Q = cF\sqrt{2gh}.$$

6. Draw a curve showing relation of discharge in cubic feet to head, as explained for weir-notches, page 285; also one showing relation of coefficient to head.

218. Measurement of Efflux of Water through an Orifice in End of Tube of Uniform Section.—A cap can often

be arranged over the end of a tube, and an orifice made in this cap with a sharp edge on the side toward the current. This will be found to give very uniform coefficients of discharge. The special method of calibrating this orifice would be as follows:

1. Arrange the tube with a cap in which is an orifice, the area of which is one third that of the pipe. Ream the sides of the orifice so that a sharp edge will be presented to the outflowing water. Attach a calibrated gauge at a distance of two diameters of the pipe back from the orifice. Arrange to weigh or measure the discharged water. Measure the orifice.

2. Make runs as explained for other calibrations with five different heads, and note reading of pressure-gauge, temperature of discharged water, weight or volume of discharged water, and least diameter of stream discharged. The least diameter of the discharged stream can be measured by arranging two sharp pointed set-screws in a frame, so that they can be screwed toward each other. These screws can be made to touch the outflowing stream, and the distance between their points measured.

3. Compute head producing the flow, coefficient of contraction, which is ratio of area of stream to area of orifice, coefficient of discharge, and loss of head. See equations (1) to (10), Article 200, page 272.

4. Draw curves on cross-section paper showing the relations of these various quantities.

5. Repeat the experiment with orifices of different sizes.

219. Measurement of the Flow of Water in Pipes by use of a Perforated Diaphragm or of a Venturi Tube.—In this case the loss of head flowing through the orifice in the diaphragm or the *Venturi tube* must be measured; then, knowing the coefficient of efflux and area of cross-section, the volume discharged can be computed by equation (28), Article 208, page 280; also Art. 204, p. 275.

$$Q = F_1 \sqrt{\frac{2g}{\zeta}(H_a - H_b)} \quad . \quad . \quad . \quad . \quad . \quad (28)$$

The difference of head is measured accurately by inserting tubes at a distance of two diameters on each side of the orifice, connecting each of these tubes to a U-shaped glass tube partly filled with water, very much as shown in Fig. 145, page 294, except that the ends of the tubes A and B are in each case perpendicular to the pipe, and are on opposite sides of the diaphragm. The difference in the height of the water in the two branches of the U-shaped tube will be the loss of head $(H_a - H_b)$ caused by the orifice. It is essential that the tubes be connected into pipes having equal areas of cross-section, since the pressure, even in the same line of pipe, increases with the area (see Article 205). The coefficient ζ should be determined by calibration, following essentially the same method as that prescribed for nozzles and Venturi tubes in Article 217.

220. Measurement of the Flow of Water in Streams.*— This is done by (1) Floating bodies; (2) Tachometer; (3) Pitot's tube; (4) Hydrometric pendulum.

Floating bodies, when used, should be small, and about the density of the water. A floating body with a volume about one tenth of a cubic foot is better than larger. They can be made of wood and weighted, or of hollow metal and partially filled with water. A coat of paint will serve to render them visible. To obtain the velocity for different depths, the surface velocity is first found, the float is then connected with a weighted ball that can be adjusted to float at any depth, and the joint velocity observed.

Call the surface velocity v_0, the joint velocity v_m; then will the velocity of the submerged ball be

$$v_1 = 2v_m - v_0.$$

A floating staff that remains vertical in still water is sometimes used.

In case floats are used, the velocity is obtained by noting the time of passing over a measured distance. The measured distance should be marked by sights, so that the line of begin

* See Weisbach's Mechanics, Vol. I.

ning and ending can be accurately determined. The float is put in above the initial point, and the instant of passing the

FIG. 142.

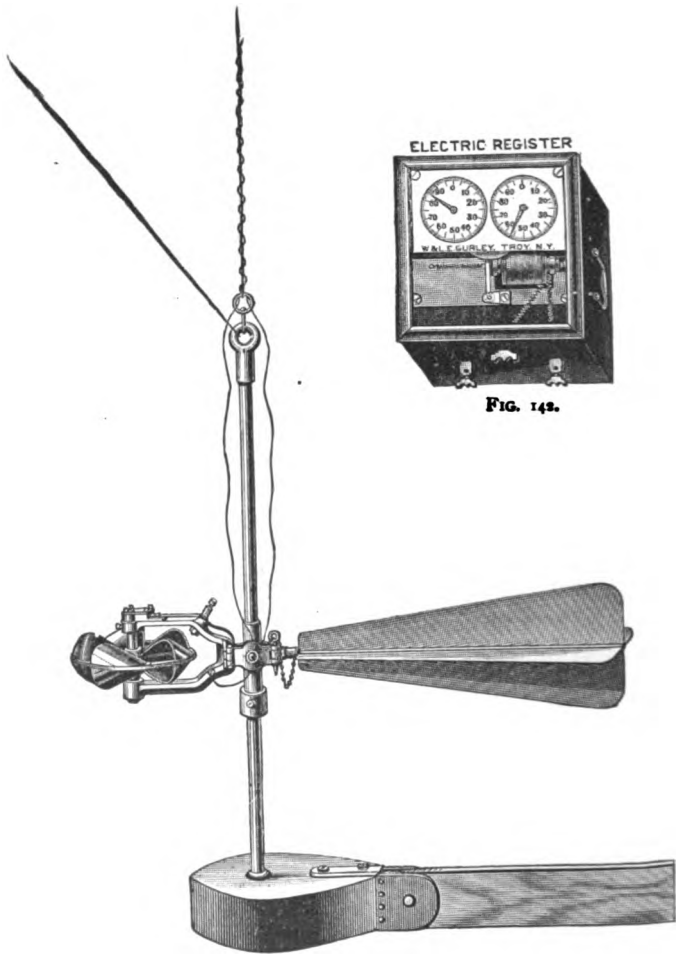

FIG. 141.—THE TACHOMETER.

first and last lines of the course is to be determined by a stop watch.

221. **The Tachometer, or Woltman's Mill,** consists of a small water-wheel connected to gearing so as to register the

number of revolutions. The wheel is anchored at the required depth in the stream, and at a given instant, the time of which is noted on a stop-watch, the gearing is set in motion by pulling on a lever; at the instant of stopping the experiment, the gears are stopped by a trip. The machine is removed, and the number of revolutions multiplied by a *constant factor* gives the total space moved by the water; this divided by the time gives the velocity.

The shape of the vanes of the revolving wheel are varied by different makers, and the wheel is made to revolve either in a horizontal or a vertical plane.

Fig. 141 shows a form used extensively, in which the gearing for registering the number of revolutions is operated by an electric current, and can be seen at any instant.

The electric register shown in Fig. 142 can be located at any distance from the tachometer convenient to the observer.

Calibration.—The constant factor, which multiplied into the dial-reading gives the velocity, is obtained by calibration. The calibration is performed by attaching the instrument to a float or a boat, and towing it past fixed marks at a known distance from each other. The velocity is obtained as for floating bodies, and the constant is found by comparing this with the readings of the instrument. One method of calibrating the

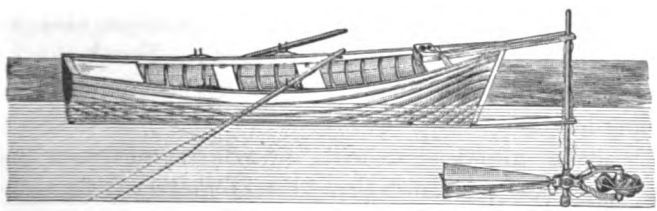

FIG. 143.

instrument is as follows (see Fig. 143): The instrument is attached to the bow of a boat, so as to remain in a vertical position; the water being still, and little or no current. The boat is propelled by a cord, which may be wound up by a windlass; the motion must be in a right line, and over a known

distance. Several trials are to be made, and the average results taken, and reduced by the method of Least Squares, as explained in Chapter I.

The tachometer is the most convenient, and if properly constructed the most accurate, method of measuring the velocity of running water.

222. Pitot's Tube.—This is a bent glass tube, held in the water in such a manner that the lower part is horizontal and opposite the motion of the current. By the impulse of the current a column of the water will be forced into the tube and held above the level of the water in the stream; this rise, DE (see Fig. 144) is proportional to the impulse or to the velocity of the water that produces it. If the height DE above the surface of the water equal h and the velocity of the water equal v, we have

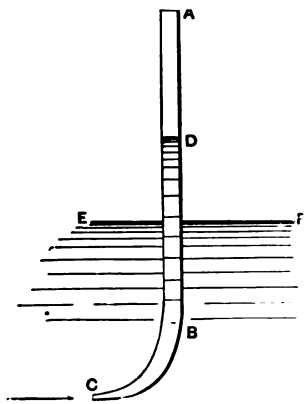

FIG. 144.—PITOT'S TUBE.

$$v = c\sqrt{gh},$$

in which c equals the coefficient to be determined by experiment.

To determine the coefficient c, the instrument is either to be held in moving water whose velocity is known, or else moved through the water at a constant velocity. From the known value of v and the observed value of h the coefficient c can be calculated.

Weisbach found that with fine instruments, when the velocities were between 0.32 and 1.24 meters (1.04 and 4.068 feet) per second, that

$$v = 3.545\sqrt{h} \text{ meters per second,}$$

or, in English measures,

$$v = 6.43\sqrt{h} \text{ feet per second.}$$

Pitot's tube, as ordinarily used, is shown in the diagram Fig. 145. It consists of two tubes, one, *AB*, bent as in Fig. 144, the other, *CD*, vertical. The mouth-pieces of both tubes are slightly convergent, to prevent rapid fluctuation in the

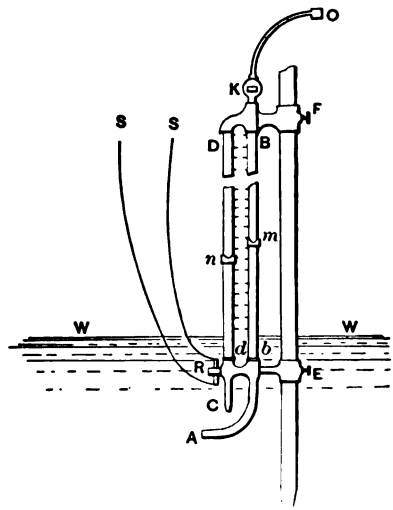

FIG. 145.—SKETCH OF PITOT'S TUBE.

tubes. These tubes are so arranged that both can be closed at any instant by pulling on the cord *ss* leading to the cock *R*. Between the glass tubes *dD* and *bB* is a scale which can be read closely by means of the sliding verniers *m* and *n*. The tubes are connected at the top, and a rubber tube with a mouth-piece *O* is attached.

In using the instrument it is fastened to a stake or post by the thumb-screws *EF*; the bent tube is placed to oppose the current of water, the cocks *K* and *R* opened. The difference in height of the water in the tubes will be that due to the velocity of the current. The water in the column *dD* will not rise above the surface of the surrounding water, and the instrument may be inconvenient to read. In that case some of the air may be sucked out at the mouth-piece *O*, and the cock *K* closed; this will have the effect to raise the water in both

columns without changing the difference of level, so that the readings can be taken in a more convenient position; or by closing the cock K, by pulling on the strings ss, the instrument may be withdrawn, and the readings made at any convenient place.

223. Pitot's Tube for High Pressures. — A modified form, as shown in Fig. 146, of Pitot's tube is useful for obtaining the velocity of liquids or gases flowing under pressure. The arrangement is readily understood from the drawing.

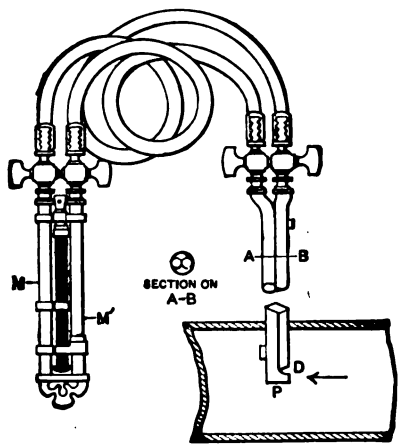

FIG. 146.—SKETCH OF PITOT'S TUBE FOR HIGH PRESSURES.

The difference of pressure is shown by the difference in heights of the liquid in the branches of the U-shaped tube MM'; this difference is due entirely to the velocity, since both branches are under equal pressure. Thus, if the liquid stand at M on one side and at M' on the other, the velocity is that due to the height of a column of liquid equal to the distance that M is above M'. Call this distance h; then

$$= c\sqrt{2gh}.$$

The coefficient c is to be determined by experiments made on a tube in which the velocity of flow is known.

224. Hydrometric Pendulum.—This instrument consists of a ball, two or three inches in diameter, attached to a string. The ball is suspended in the water and carried downward by the current; the angle of deviation with a vertical may be measured by a graduated arc supported so that the initial or zero-point is in a vertical line through the point of suspension. If the current is less than 4 feet per second an ivory ball can be used, but for greater velocities an iron ball will be required. The instrument cannot give accurate determinations, because of the fluctuations of the ball and consequent variations in the angle. The formulæ for use are as follows: Let G equal the weight of the ball, D equal the weight of an equal volume of water; then $G - D$ is the resultant vertical force. Let F equal area of cross-section of the body, v the velocity of the current, c a coefficient to be determined by experiment; then we have the horizontal force $P = cFv^2$. Let angle of deviation be δ; then

$$\tan \delta = \frac{P}{G - D} = \frac{cFv^2}{G - D},$$

from which

$$v = \sqrt{\frac{(G - D) \tan \delta}{cF}}.$$

The best results with this instrument will be only approximations.

225. Flow of Compressible Fluids through an Orifice.—*General Case.*—In this case, as heat is neither given nor taken up, the flow is adiabatic. The formulæ are deduced by principles of thermodynamics, and their derivation can be studied in treatises devoted to those subjects.*

Denote the velocity by v, the weight per cubic foot by G, the pressure per square foot in the vessel from which the flow

* See Peabody's Thermodynamics, p. 132; also, art. "Hydromechanics," Encyc. Britannica.

takes place by p_1, the pressure against which the flow takes place by p_2, the volume of one pound in cubic feet by C, the absolute temperature corresponding to pressure p_1 by T_1, the ratio of specific heats by γ.

$$\frac{v_2^2}{2g} = p_1 C\left(\frac{\gamma}{\gamma - 1}\right)\left\{1 - \left(\frac{p_2}{p_1}\right)^{\frac{\gamma-1}{\gamma}}\right\} = \frac{p_1}{G_1}\frac{\gamma}{\gamma - 1}\left\{1 - \left(\frac{p_2}{p_1}\right)^{\frac{\gamma-1}{\gamma}}\right\}; \quad (29)$$

also,

$$\frac{p_1 v_1}{T_1} = \frac{p_0 v_0}{T_0} \quad \text{and} \quad \frac{p_1}{G_1 T_1} = \frac{p_0}{G_0 T_0}. \quad . \quad . \quad . \quad (30)$$

226. Flow of Air.—For air, $p_0 = 2116.8$, $G_0 = 0.08075$. $T_0 = 492.6$ at 32° Fahr., $\gamma = 1.405$. Inserting these numerical values, we have the following equation for the theoretical velocity of flow of air through an orifice:

$$\frac{v_2^2}{2g} = 183.6 T_1\left\{1 - \left(\frac{p_2}{p_1}\right)^{0.29}\right\}^{*}. \quad . \quad . \quad (31)$$

Volume of Air discharged.—The volume of air discharged, in cubic feet per second at pressure of discharge, is to be computed by multiplying the area of the orifice F_1 in square feet, by the velocity v_2, by a coefficient of discharge c. Then

$$Q_2 = cF_1 v_2 = cF_1\sqrt{183.6 T_1 (2g)\left\{1 - \left(\frac{p_2}{p_1}\right)^{0.29}\right\}}^{*}$$

$$= 108.7 cF_1\sqrt{T_1\left\{1 - \left(\frac{p_2}{p_1}\right)^{0.29}\right\}}. \quad . \quad (32)$$

Substituting numerical values for the ratio of p_2 to p_1, we have

$$Q_2 = 108.7 cF_1\sqrt{0.1695 T_1}. \quad . \quad . \quad . \quad . \quad (33)$$

* See article "Hydromechanics," Encyc. Britannica, Vol. XII, page 481.

To express this in terms of the volume discharged from the reservoir Q_1, in which p_1 is reservoir pressure and p_2 pressure of discharge, we have

$$Q_1 = \left(\frac{p_2}{p_1}\right)^{\frac{1}{\gamma}} Q_2.$$

Substituting numerical values for free flow,

$$Q_1 = (0.527)^{\frac{1}{1.405}} Q_2 = 0.6339 Q_2;$$

$$Q_1 = 108.7 c F_1 \left(\frac{p_2}{p_1}\right)^{\frac{1}{\gamma}} \sqrt{T_1 \left\{ 1 - \left(\frac{p_2}{p_1}\right)^{0.29} \right\}}. \quad . \quad . \quad (34)$$

Substituting values of $p_2 \div p_1$,

$$Q_1 = 68.8 c F_1 \sqrt{0.1695\, T_1}. \quad . \quad . \quad . \quad . \quad . \quad (35)$$

227. Velocity of Flow of Air through an Orifice.—The velocity of flow is obtained by substituting numerical values in the preceding equations. We have, denoting by T_1 the absolute temperature in the reservoir as the greatest velocity of flow of air,

$$\frac{v_2^2}{2g} = 183.6 T_1 (1 - 0.8305). \quad . \quad . \quad . \quad . \quad . \quad (36)$$

Solving equation (36), we have the following theoretical results:

Temperature of Air in Reservoir.		Velocity of Flow in Feet per Sec.
Degrees Fahr.	Absolute.	
32	492.6	991
70	530.6	1030
100	560.6	1058
150	610.6	1105
200	660.6	1148
300	760.6	1233
400	860.6	1312
500	960.6	1386

228. The Weight of Air discharged.—This is to be computed by multiplying the volume of discharge by the specific weight.

Thus the weight of air is

$$G_1 = \frac{p_1}{53.2\,T_1} \text{ pounds per cubic foot,}$$

when p_1 and T_1 are, respectively, pressure and absolute temperature in the reservoir. Hence the weight of air discharged is

$$W_1 = Q_1 G_1 = 108.7 c F_1 G_1 \left(\frac{p_2}{p_1}\right)^{\frac{1}{\gamma}} \sqrt{T_1 \left(1 - \left(\frac{p_2}{p_1}\right)^{0.29}\right)} \quad . \quad . \quad (37)$$

Weisbach has found the following values of c, the coefficient of discharge:

Conoidal mouth-piece of the form of the contracted vein, with effective pressures of 0.23 to 1.1 atmospheres	0.97 to 0.99
Circular sharp-edged orifices	0.563 to 0.788
Short cylindrical mouth-pieces	0.81 to 0.84
The same rounded at the inner end	0.92 to 0.93
Conical converging mouth-pieces	0.90 to 0.99

In the general formula for the flow of air, the weight delivered becomes a maximum when

$$\frac{p_2}{p_1} = \left(\frac{2}{\gamma + 1}\right)^{\frac{\gamma}{\gamma - 1}}.$$

This equals 0.527 for air and 0.58 for dry steam. This has been verified by experiment, and tends to prove that the pressure of the orifice of discharge is independent of the back-pressure. In the flow of air from a higher to a lower pressure

through a small tube or orifice, the pressure in the orifice may be less than the back-pressure.

229. Flow of Air in Pipes.—When air flows through a long pipe, a great part of the work is expended in overcoming frictional resistances. This friction generates heat, which is largely used in increasing the pressure in the pipes, the only loss being from radiation, which is small.

The expansion then is isothermal, the heat generated by friction exactly neutralizing the heat due to work.

For pipes of circular section, when d is the diameter, l the length, p_0 the greater and p_1 the less pressure, T the absolute temperature, ζ the coefficient of discharge, c_p (= 53.15 foot-lbs.) the specific heat, we have the initial velocity

$$u_0 = \sqrt{\left\{\frac{gc_pTd}{4\zeta l}\,\frac{p_0^2 - p_1^2}{p_0^2}\right\}}. \quad . \quad . \quad . \quad . \quad . \quad (38)$$

This may be reduced to

$$u_0 = \left(1.1319 - 0.7264\frac{p_1}{p_0}\right)\sqrt{\frac{gc_pTd}{4\zeta l}}.$$

It has been found from recent experiments that fair values of the coefficient are as follows: *

$$\zeta = 0.005\left(1 + \frac{3}{10d}\right)$$

in ordinary pipes for velocities of 100 feet per second;

$$\zeta = 0.0028\left(1 + \frac{3}{10d}\right)$$

for pipes as smooth as those at the St. Gothard Tunnel.

* See "Hydromechanics," Encyc. Britannica, Vol. XII, p. 491.

Weight of air flowing per second in circular pipes in pounds is given by the equation

$$W = \frac{\pi}{4}\sqrt{\left\{\frac{gd^5}{\zeta l c_p T}(p_0^2 - p_1^2)\right\}}$$

$$= 0.6111\sqrt{\left\{\frac{d^5}{\zeta l t}(p_0^2 - p_1^2)\right\}}.$$

Approximately,

$$W = (0.6916p_0 - 0.4438p_1)\left(\frac{d^5}{\zeta l t}\right)^{\frac{1}{2}}. \quad . \quad . \quad . \quad (39)$$

230. Flow of Steam through an Orifice.—*Velocity.*—In this case, as in Article 226, the expansion is supposed to be adiabatic.

Denote by A the reciprocal of the mechanical equivalent of one B. T. U. corresponding to the quantity 778; by x_1 the quality or percentage of dry vapor in the reservoir, corresponding to the pressure per sq. foot p_1, and by x_2 the quality in the tube, corresponding to pressure p_2; by r_1 the latent heat per pound in reservoir, r_2 the same in the tube; T_1 and T_2 the respective absolute temperatures, θ_1 and θ_2 the respective entropies of the liquids, c the specific heat of the liquid, q_1 and q_2 the sensible heat of the liquid in reservoir and tube; the reciprocal of the weight of a cubic foot of the liquid by σ. Then

$$\frac{Av^2}{2g} = x_1r_1 - x_2r_2 + q_1 - q_2 + A\sigma(p_1 - p_2). \quad . \quad (40)$$

x_2 can be determined from the relation expressed in the equation

$$\frac{x_1r_1}{T_1} + \theta_1 = \frac{x_2r_2}{T_2} + \theta_2. \quad . \quad . \quad . \quad . \quad . \quad . \quad (41)$$

If no tables are at hand for θ_1, its approximate value can be deduced, since

$$\theta_1 - \theta_2 = c \log_e \frac{T_1}{T_2} \quad \ldots \ldots \quad (42)$$

So that

$$\frac{x_2 r_2}{T_2} = \frac{x_1 r_1}{T_1} + c \log_e \frac{T_1}{T_2}.$$

Eliminating x_2 in equations (40) and (41),

$$\frac{Av^2}{2g} = \frac{x_1 r_1}{T_1}(T_1 - T_2) - T_2(\theta_1 - \theta_2) + (q_1 - q_2) + A\sigma(p_1 - p_2). \quad (43)$$

The following table, condensed from Peabody's steam tables, gives the value of the entropy of the liquid:

TABLE OF ENTROPY OF THE LIQUID.

Absolute Steam-pressure p	Entropy of the Liquid, θ	Absolute Steam-pressure, p	Entropy of the Liquid, θ
1	0.1329	65	0.4337
10	0.2842	70	0.4402
15	0.3143	75	0.4464
20	0.3363	80	0.4522
25	0.3539	85	0.4579
30	0.3685	90	0.4633
35	0.3811	95	0.4686
40	0.3921	100	0.4733
45	0.4020	105	0.4780
50	0.4109	110	0.4826
55	0.4191	115	0.4869
60	0.4267	120	0.4911

In the above equations A has a numerical value of $1 \div 778$, σ is nearly equal to 0.016, g to 32.16.

* See Thermodynamics, by Peabody, page 138.

It has been shown that in the flow of saturated steam p_1 will not fall below 0.58 of p_1, because at that point there is the maximum weight of discharge. In the actual trials this seems to be nearer 0.61 than 0.58. If we assume p_2 equal to $0.6p_1$, the velocity will be found to be nearly constant, and to vary but little from 1400 feet per second.

231. Weight of Steam discharged through an Orifice.—This was determined experimentally by R. D. Napier, and expressed by the formula

$$W = \frac{Fp_1}{70},$$

in which W = weight discharged in pounds per second, F = area of orifice in square inches, and p_1 is the absolute pressure of the steam, pounds per square inch, which is equal to or greater than $1\frac{2}{3}$ that of the atmosphere.

This formula has been verified by experiments made in the Laboratories of Sibley College and also at the Massachusetts Institute of Technology, and is found to vary but little from the actual results.

232. Measurement of the Flow of Gas.—*Gas-meters.*—In the measurement of gas the product of absolute pressure, p, by volume, v, divided by absolute temperature, T, is a constant quantity. Thus

$$\frac{pv}{T} = \frac{p_1v_1}{T_1}.$$

If p and T can be kept constant, the quantity discharged will vary as the volume; if p and T are known, the quantity discharged can be computed.

Gas-meters are instruments for measuring the volume of gas passing them. They are constructed on various plans and are known as *Wet* or *Dry*, depending on whether water is used. The volume is usually measured in cubic feet.

Meter-prover.—This is the name given to a sort of gasometer arranged as shown in Fig. 147 It consists of an open vessel

DE, partly filled with water, into which a vessel, *AF*, of somewhat smaller diameter is inverted. The weight of the vessel *AF* is counterbalanced by a weight *W* which descends into a vessel of water *CK* at such a rate as to keep the sum of the displacements of the two vessels constant, in which case the pressure

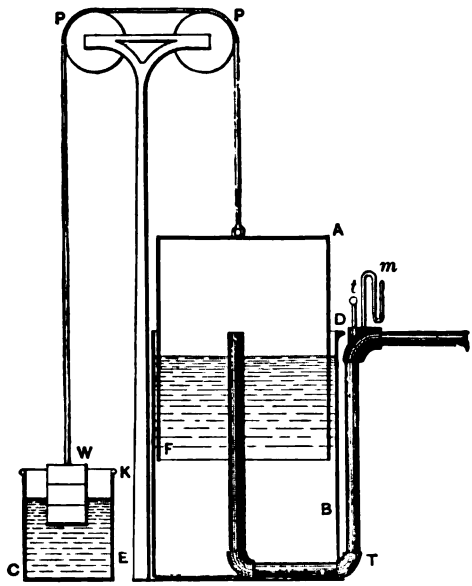

FIG. 147.

on the confined gas in the vessel *AF* will remain constant. The gas flows out through the pipe *T*, its pressure being taken by a manometer at *m*, its temperature by a thermometer at *t*.

Fig. 148 shows a form of meter-prover made by the American Meter Co., in which the counterweight lifts an additional weight moving over an involute wheel, so calculated that the pressure on the outflowing gas remains constant. These instruments are used principally to calibrate meters; they give very accurate results, but are not suited for continuous measurements.

Wet-meter.—The wet-meter works on the same principle as the meter-prover, but is arranged with a series of chambers

which are alternately filled and emptied with gas. These chambers are usually arranged like an Archimedean screw, as shown in section in Fig. 149.

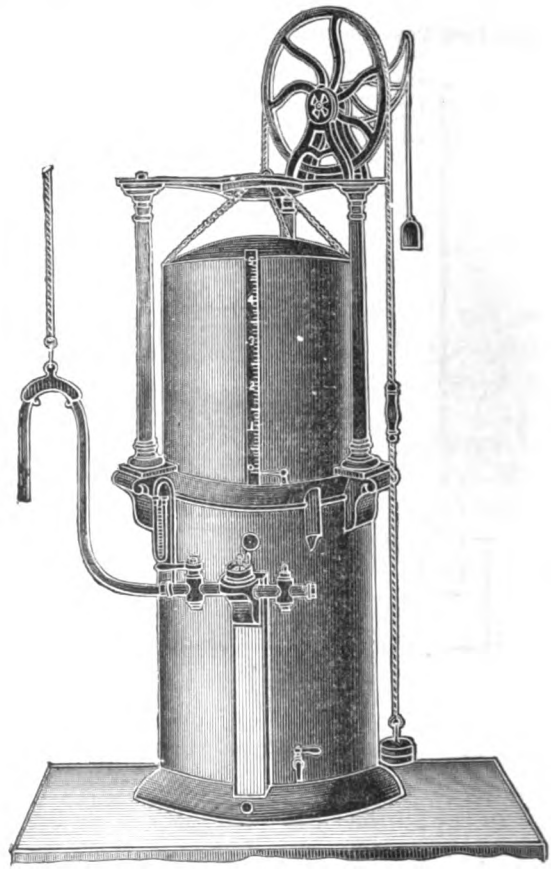

FIG. 148.—METER-PROVER.

Gas is admitted just above the surface of the water, and raises the partition of the chamber, bringing it above the water and filling it. The outlet-pipe is submerged until the chamber is filled. It is connected with the case of the meter, as shown in the figure. The gas is completely expelled as the cylinder revolves.

The wet-meter is a very accurate measure of the gas passing, provided the water-level be maintained at the constant standard height. Any change of the water-level changes the size of the chambers accordingly. The motion of the cylinder actuates the recording mechanism.

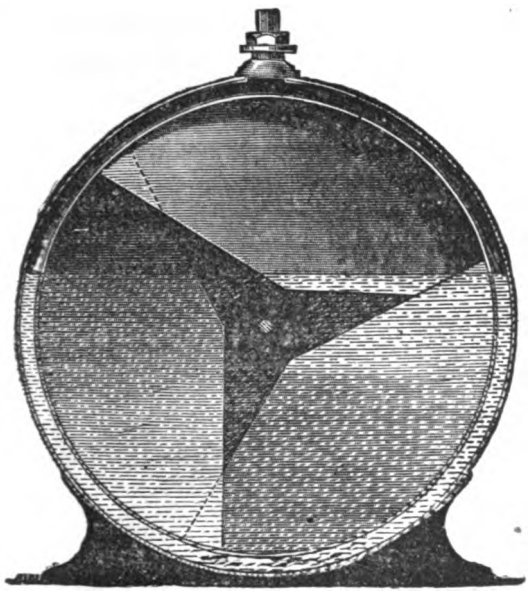

FIG. 149.—THE WET-METER.

The Dry Gas-meter.—The dry gas-meter possesses the advantage of not being affected by frost, nor of increasing the amount of moisture in the gas. The dry-meter is made in various forms, and generally consists of two chambers separated from each other by partitions. Each chamber is divided into two parts by a flexible partition which moves backwards and forwards, and actuates the recording mechanism as the gas flows in or out. This motion is regulated by valves somewhat similar to those of a steam-engine. The gas-meter is calibrated by comparing with a meter-prover as already described. These meters are not supposed to be instruments of great accuracy.

233. Anemometers.—Instruments that are used to measure the velocity of gases directly are termed anemometers. They consist of flat or hemispherical vanes mounted like arms of a light wheel so as to revolve easily. The motion of the wheel actuates a recording mechanism. Robinson's Anemometer, which consists of hemispherical cups revolving around a vertical axis, is much used for meteorological observations.

A form shown in Fig. 150 with flat vanes, and with the

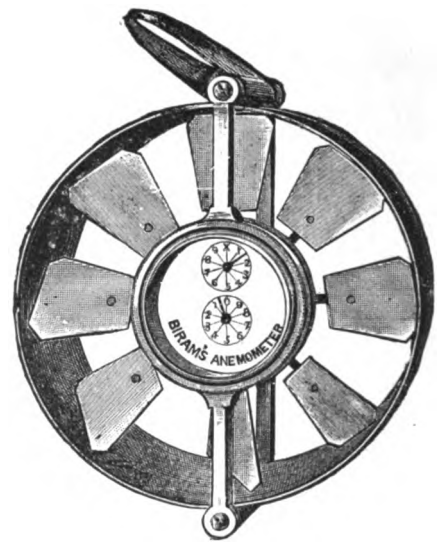

FIG. 150.—BIRAM'S PORTABLE ANEMOMETER.

dial arranged in the centre as shown, or on top of the case in various positions, is much used as a portable instrument.

The dial mechanism of the anemometer can be started or stopped by a trip arranged convenient to the operator; in some instances the dial mechanism is operated by an electric current similar to that described in connection with the tachometer, Article 221, page 262. It is also made self-recording, by attaching clock-work carrying an endless paper strip which is moved under a pencil operated by the anemometer mechanism.

234. Calibration of Anemometers.—Anemometers are calibrated by moving them at a constant velocity through still air and noting the readings on the dials for various positions. This is usually done by mounting the anemometer rigidly on a long horizontal arm which can be rotated about a vertical axis at a constant speed. The distance moved by the anemometer in a given time is computed from the known distance to the axis and the number of revolutions per minute; from these data the velocity is computed.

In performing this experiment care must be taken that the axis of the anemometer is at right angles to the rotating arm. Readings should be taken at various speeds, since the correction is seldom either a constant quantity or one directly dependent on the velocity.

The Anemometer can also be calibrated by computing the heating effect due to the condensation of a given amount of steam. The method of calibration would be as follows: pass the air through a tube or box containing a coil of steam-pipe sufficient to warm the air sensibly, say 20 or 30 degrees. Measure the quality of the entering steam and the amount of condensation, and from that compute number of heat-units taken up by the air. Guard against all loss of heat by the air; then this last quantity becomes evidently equal to the increase in temperature of the air multiplied by its specific heat, multiplied by its weight. From this computation the weight of the air can be computed. Knowing the weight of air and its temperature, compute the volume flowing in a given time, divide this result by the area of the cross-section, and obtain the velocity. This method is likely to give more satisfactory results than that of swinging the dynamometer in the air. Also see Chapter XXIV, Art. 490.

CHAPTER IX.

HYDRAULIC MACHINERY.

235. General Classification.—Hydraulic machinery may be divided into the two classes, *hydraulic motors* and *pumps*. In the first class a quantity of water descending from a higher to a lower level, or from a higher to a lower pressure, drives a machine which receives energy from the water. In the latter class a machine driven by some external source of energy is employed in lifting water from a lower to a higher level.

The student is advised to consult the following authorities on the subject:

Rankine's Steam-engine; article "Hydromechanics," Encyc. Britannica; Weisbach's Mechanics, Vol. II. (Hydraulics); "Systematic Turbine-testing," by Prof. Thurston, Vol. VIII. Transactions Mechanical Engineers; "Notes on Hydraulic Motors," by Prof. I. P. Church.

236. Hydraulic Motors—Classification.—The following classes of hydraulic motors are usually recognized:

I. *Water-bucket Engines*, in which water poured into suspended buckets causes them to descend vertically, so as to lift loads and overcome resistances.

II. *Water-pressure Engines*, in which water by its pressure drives a piston backward and forward.

III. *Vertical Water-wheels*, in which the water acts by weight and impulse to rotate them on a horizontal axis.

IV. *Turbines*, in which the water acts by pressure and impulse to rotate them around a vertical axis.

V. *Rams and Jet-pumps*, in which the impulse of one mass of fluid is used to drive another.

237. Energy of Falling Water.—Hydraulic motors are driven either by the weight, pressure, or impulse of moving water. Neglecting the losses due to friction or other causes, the energy of falling water is the same whether it act by (I.) *weight*, (II.) by *pressure*, or (III.) by *impulse*. This is proved as follows:

Let h equal the head or total height of fall, Q the discharge in cubic feet per second, G the weight per cubic foot, p the pressure in pounds per square foot, v the velocity in feet per second, P the pressure in pounds per square inch. Since the work done is equal to the product of the force acting into the space moved through, we have for the work done per second in the several cases (I.) GQh, (II.) (pQ), (III.) $GQ\frac{v^2}{2g}$; but since $p = Gh$ and $h = \frac{v^2}{2g}$, we have by substitution

$$GQh = pQ = GQ\frac{v^2}{2g} = 144PQ. \quad . \quad . \quad . \quad . \quad \text{(I.)}$$

238. Parts of an Hydraulic Power-system.—The hydraulic power-system in general requires—

1. A supply-channel or tube leading the water from the highest accessible level.

2. A discharge-pipe or tail-race conveying the water away from the motor.

3. Gates or valves in the supply-channel, and a waste-channel or weir to convey surplus water away from the motor.

4. The motor, which may belong to any of the classes described in Article 236, and suitable machinery for transmitting the energy received from the motor to a place where it can be usefully applied.

239. Water-pressure Engines.*—Water-pressure engines are well adapted for use where a slow motion is required and a great pressure is accessible.

---

* See Weisbach's Hydraulics, Vol. II, p. 558.

These engines resemble in many respects a steam-engine, water being the motive force instead of steam. They consist of a cylinder (Fig. 151) in which a piston T is worked alter-

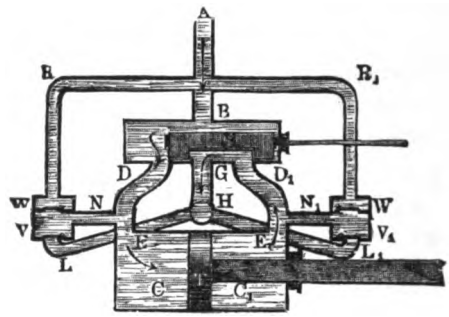

FIG. 151.—WATER-PRESSURE ENGINE.

nately forward and backward, water being admitted alternately at the two ends of the cylinder by the moving slide-valve S. While water is passing into one end of the cylinder through the passages D, E, C, it is being discharged through the pipe E, G, H, which is proportioned so as to afford a free exit to the water. Near the end of the stroke of the piston the slide-valve S closes both admission-ports, and the pressure in the cylinder C_1 is increased by the diminution of volume caused by the motion of the piston. When the pressure in the chamber C_1 exceeds that in the supply-pipe the valve W_1 opens, and the water passes into the supply. Simultaneously the valve V is opened by suction, and water passes into the chamber C from the discharge-pipe. The effect of this action is to gradually arrest the motion of the piston at the end of the stroke by reducing the pressure on one side and increasing the resistance on the other. When the piston reaches the end of the stroke the slide-valve is reversed in position and a new stroke is commenced.

240. Vertical Water-wheels.—There are four classes of vertical water-wheels:

1. *Overshot*, in which the water is received on the top of

the wheel and discharged at the bottom, the water acting principally by weight.

2. *Breast*, in which the water is received on the side of the wheel and held in place by a guide or breast, the water acting both by impact and weight.

3. *Undershot*, in which the water acts only on the under side of the wheel, the water acting principally by impact.

4. *Impact*, in which the water is delivered to the wheel by a nozzle, acting generally on the top or bottom, and by impulse only.

241. Overshot Water-wheels.—The overshot water-wheel shown in section in Fig. 152 is well adapted to falls between 10 and 70 feet and to a water-supply of from 3 to 25 cubic feet per minute. On the outside of the wheel is built a series of buckets, which should be of such a form as to receive the water near the top at *D* without spilling or splashing, to retain the water until near the bottom, and to empty completely at the bottom. The number of buckets must be such that there shall be no spilling by overflow at the top. The head of water above the wheel must be sufficient to give the falling water greater velocity than the periphery. The peripheral velocity in practice is from 5 to 10 feet per second, that of the falling water from 9 to 12 feet per second, corresponding to a height of from 16 to 27 inches above the wheel.

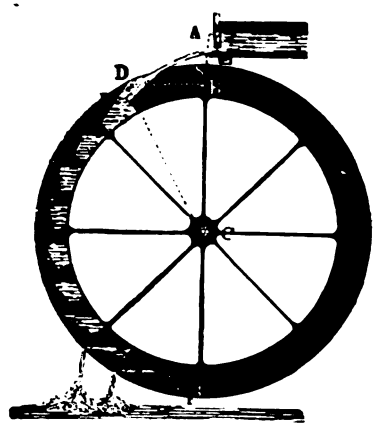

FIG. 152.—SECTION OF OVERSHOT WATER-WHEEL.

These wheels are not adapted to run in back water, and have the greatest efficiency for a given head when revolving just free from the discharged water.

The principal formulæ relating to the overshot-wheel are as follows:

Let d equal the depth of the buckets, b the width of the wheel, r the radius of the wheel, n the number of revolutions per second, v the peripheral velocity in feet per second, Q the water-supply in cubic feet per second, Q_1 the capacity of that part of the wheel that passes in one second, m the ratio of the water actually carried to the capacity of the buckets—m being usually about one fourth—N the number of buckets.

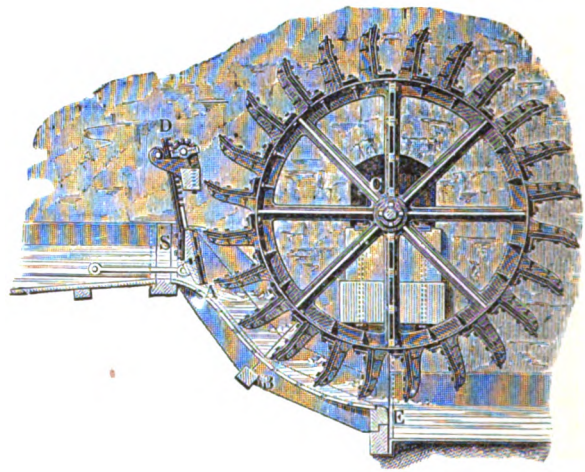

FIG 153.—SECTION OF BREAST-WHEEL.

Then, supposing the wheel to be set just free of the back water,

$$h = 2r + (1\tfrac{1}{8} \text{ to } 2) \text{ all in feet;}$$

$$N = \frac{2\pi r}{d} = \text{, usually, } 6r;$$

$$Q_1 = \frac{bv}{2r}(2rd - d^2) = bdv, \text{ nearly;}$$

$$Q = mQ_1 = mbdv;$$

$$v = 2\pi nr.$$

The efficiency is the ratio of the work delivered to the energy received from the falling water.

The efficiency of the best wheels of this class reaches 75 per cent.

242. Breast-wheels.—The form of breast-wheel is shown in Fig. 153. The water is received at a height slightly above or below the centre C of the wheel, and is prevented from falling away from the wheel by the curved breast ABE; the water acts on the radial or slightly curved buckets, thus tending to revolve the wheel partly by weight and partly by impulse.

The flow of water is regulated by a gate at S.

The formulæ applying to breast-wheels are essentially the same as those for overshot-wheels. The efficiency of the best wheels of this class varies from 58 to 62 per cent.

243. Undershot-wheels.—The undershot-wheel differs from the breast-wheel in receiving the water at or near the bottom; the water flows in a guide under the wheel, which guide in some cases extends some distance up the sides. The usual form of such wheels is shown in Fig. 154; the buckets or floats are often radial, sometimes, however, of concave or bent form.

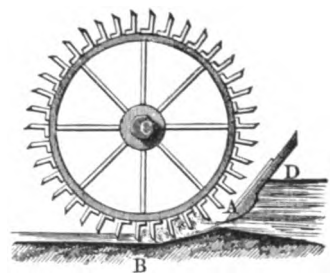

FIG. 154.—UNDERSHOT-WHEEL.

If we let c equal the velocity of water as it strikes the wheel, v the peripheral velocity of the wheel, Q the quantity of water in cubic feet per second, G the weight per cubic foot, h_2 the portion of the head corresponding to the elevation of the entering water as it strikes the wheel over that of the discharge, P the force delivered at the circumference of the wheel; then will the efficiency η be obtained by the following formulæ:*

$$\eta = \frac{Pv}{QG\left[\frac{(c-v)v}{g} + h_2\right]}.$$

* See Weisbach's Hydraulics, page 291.

From experiments of Morin it was found that when $v \div c$ was less than 0.63, the efficiency η was 0.41. When $v \div c$ was between 0.63 and 0.8, η was 0.33. The efficiency obtained from the best form of these wheels is 0.55.

Poncelet's Wheel.—When the floats of the undershot wheel are curved in such a manner that the entering jet of water is allowed to flow along the concave sides and press against them without causing shock, a greater effect is obtained than when the water strikes more or less perpendicularly against plane floats. Such wheels are called, after their inventor, Poncelet wheels. The efficiency of such wheels in some instances has reached 68 per cent.

244. Impulse-wheels.—In this class of wheels several jets of water impinge on the buckets of the wheel as they are successively brought into position by the rotation. This class is very efficient for high heads and a small supply of water. The efficiency to be obtained by the action of a jet of water on a moving bucket is fully discussed in Vol. II., Church's "Mechanics of Engineering," page 808.

Denote by c velocity of the jet, v the peripheral velocity of the vane, α the angle of total deviation relatively to the vane of the stream leaving the vane from its original direction, G the weight per cubic foot of water, F the area of the stream, Q the volume of flow per unit of time over the vane. The work done per unit of time,

$$L = Pv = \frac{QG}{g}(c - v)v[1 - \cos \alpha].$$

This is maximum when $v = \frac{1}{2}c$.

In case a hemispherical vane is used, α will equal 180°, and $1 - \cos \alpha = 2$. For that case, $\alpha = 180°$ and $v = \frac{1}{2}c$, we have

$$L = \frac{QG}{g} \cdot \frac{c^2}{2}.$$

In case the absolute velocity of the particles leaving the vane equal zero, an efficiency equal to unity would be possible.

One or more jets of water are used as necessary to produce the maximum power. Fig. 155 shows the Pelton wheel, provided with four jets. The bucket of this wheel shown at *B* is of double hemispherical form with a sharp midriff, separating the two parts, which splits the jet and turns each part through an angle of 180°. The efficiency of is wheel has in some instances exceeded 80 per cent.

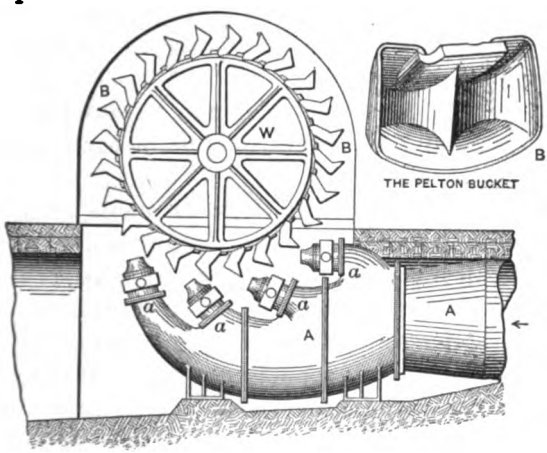

FIG. 155.—THE PELTON IMPULSE-WHEEL WITH FOUR JETS.

There is a large number of motors in this class, some of which are adapted for high heads and large powers. The Doble wheel is provided with a needle regulating-valve controlled by the governor. The Cascade has buckets arranged on each side of the wheel, the edge of the wheel serving to divide the jet. Most of the small hydraulic motors are of impulse type.

245. Turbines. — The turbine-wheels receive water constantly and uniformly, and usually in each bucket simultaneously. The buckets are usually curved, and the water is guided into the buckets by fixed plates. The name was originally applied in France to any wheel rotating in a horizontal plane, but the wheels are now frequently erected so as to revolve in vertical planes. The turbine was invented by Fourneyron in 1823, the original wheel being constructed to receive water near

the axis, and to deliver it by flow outward at the circumference. Turbines are now built for water flowing parallel to the axis, and also inward from the circumference toward the centre; they are also constructed double and compound. In some of the turbines the wheel-passages or buckets are completely filled with water, in others the passages are only partly filled.

The following classes are usually recognized:

I. *Impulse Turbines.*

II. *Reaction Turbines.*

In both these classes the flow may be axial outward, inward, or mixed, and the turbine may be in each case simple, double, or compound.

In the *Impulse turbines* the whole available energy of the water is converted into kinetic energy before it acts on the moving part of the turbine. In these wheels the passages are never entirely filled with water. To insure this condition they must be placed a little above the tail-water and discharge into free air.

In the Reaction turbines a part only of the available energy of the water is converted into kinetic energy before it acts on the turbine. In this class of wheels the pressure is greater at the inlet than at the outlet end of the wheel-passages. The wheel-passages are entirely filled with water, and the wheel may be, and is generally, placed below the water-level in the tail-race.

246. Theory of the Turbine.*—The water flowing through a turbine enters at the admission-surface and leaves at the discharge-surface of the wheel, with its angular momentum relative to the wheel changed. It must exert a couple $-M$, tending to rotate the wheel, and equal and opposite to the couple M which the wheel exerts on the water. Let Q cubic feet enter and leave the wheel per second, c_1, c_2 be the tangential components of the velocity of the water at the receiving and discharging surfaces of the wheel, r_1, r_2 the radii of these surfaces. Then

$$-M = \frac{GQ}{g}(c_2 r_2 - c_1 r_1). \quad . \quad . \quad . \quad . \quad . \quad (1)$$

* See "Hydromechanics," Encyc. Britannica.

If α is the angular velocity of the wheel, the work done on the wheel is

$$T = M\alpha = \frac{GQ}{g}(c_1r_1 - c_2r_2)\alpha \text{ foot-pounds per second.} \quad (2)$$

The total head of the water h_t is reduced by friction and resistances h_f in the channels leading to the wheel, so that the effective head h which should be used in calculating the efficiency is

$$h = h_t - h_f. \quad . \quad . \quad . \quad . \quad . \quad . \quad . \quad . \quad (3)$$

In case the construction of the turbine requires that it set above tail-race d feet, the velocity of water in the turbine should be calculated for a head of $h-d$, but the efficiency for a head of h feet. The work of the turbine is partially absorbed in friction.

Let T equal the total work, T_d the useful work, and T_t the work used in friction. Then

$$T = T_d + T_t. \quad . \quad . \quad . \quad . \quad . \quad . \quad . \quad . \quad (4)$$

The gross efficiency

$$\eta' = \frac{T_d}{GQh_t}. \quad . \quad . \quad . \quad . \quad . \quad . \quad . \quad . \quad . \quad (5)$$

The hydraulic efficiency

$$\eta = \frac{T}{GQh}. \quad . \quad . \quad . \quad . \quad . \quad . \quad . \quad . \quad . \quad (6)$$

The hydraulic efficiency is of principal importance in the theory of turbines. Substituting this value of T in equation (2),

$$\eta = \frac{(c_1r_1 - c_2r_2)\alpha}{gh}; \quad . \quad . \quad . \quad . \quad . \quad . \quad . \quad (7)$$

which is the fundamental equation in the theory of turbines.

For greatest efficiency the velocity of the water leaving should be 0, in which case $c_2 = 0$ and

$$\eta = \frac{c_1 r_1 \alpha}{gh}. \quad . \quad . \quad . \quad . \quad . \quad . \quad . \quad . \quad (8)$$

But $r_1\alpha$ is the lineal velocity of the wheel at the inlet surface: if we call this V_1,

$$\eta = \frac{c_1 V_1}{gh}. \quad . \quad . \quad . \quad . \quad . \quad . \quad . \quad . \quad (9)$$

The efficiency of the best turbines is 0.80 to 0.90.

Speed of the Wheel.—The best speed of the wheel depends on frictional losses which have been neglected in the preceding formulæ. The best values are the ones obtained by experiment. Let V_0 equal the peripheral velocity at outlet, V_i at inlet, r_0 and r_i the corresponding radii of outlet and inlet surfaces. Then we shall have as best speeds* for

axial-flow turbine $V_0 = V_i = 0.6\sqrt{2gh}$ to $0.66\sqrt{2gh}$;

radial outward-flow turbine $V_i = 0.56\sqrt{2gh}$; $V_0 = V_i \frac{r_0}{r_1}$;

radial inward-flow turbine $V_i = 0.66\sqrt{2gh}$; $V_0 = V_i \frac{r_0}{r_1}$.

247. Forms of Turbines.—*Fourneyron's Turbine.*—This is an outward-flow turbine, with a horizontal section as shown in Fig. 156. C is the axis of the wheel, which is protected from the water by vertical concentric tubes shown in section. On the same level with the wheel and supported by these tubes is a fixed cylinder, with a bottom but no top, containing the curved guides F F. The wheel AA is supplied with curved buckets bd, b_1d_1, so arranged as to absorb most of the energy of the water; the water enters the wheel at the inner edges of the buckets and is discharged at the outer circum-

* "Hydromechanics" Encyc. Britannica.

ference. Gates for regulating the supply of water are shown in section between the ends of the guides and the wheel.

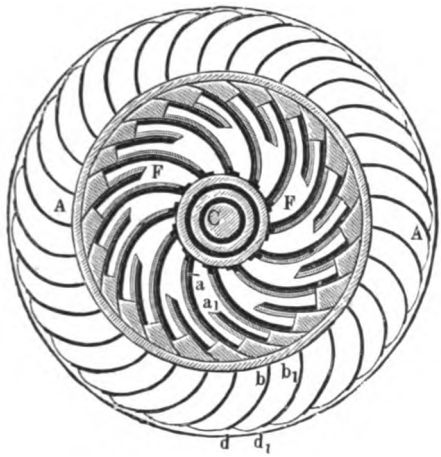

FIG. 156.—OUTWARD-FLOW TURBINE.

248. Reaction-wheels.—The simple reaction-wheel is shown in Fig. 157, from which it is seen to consist of a vertical cylinder, CB, which receives the water, and two cylindric arms, G and F; on opposite sides of each arm is a circular orifice through which the water is discharged. The effect of this arrangement is to reduce the pressure on the sides toward the orifices, thus producing an unbalanced pressure which tends to make the wheel revolve. If we denote by h the available fall measured from the level of the water in the vertical pipe to the centre of the orifices, r the radius of rotation measured from the axis to the centre of each orifice, v the velocity of discharge, α the angular velocity of the machine, F the area of the orifices,—when at rest the velocity would equal $\sqrt{2gh}$, but when in motion the water in the arms moves with a velocity αr, which corresponds to an increased head due to centrifugal force of $\alpha^2 r^2 \div 2g$.

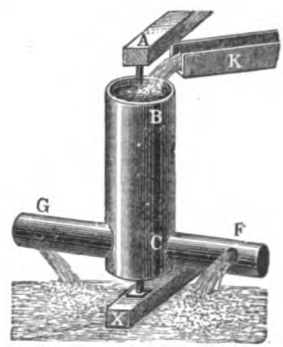

FIG. 157.—THE REACTION-WHEEL.

Hence the velocity of discharge through the orifices is

$$v = \sqrt{2gh + \alpha^2 r^2};$$

the quantity discharged

$$Q = Fv = F\sqrt{2gh + \alpha^2 r^2}.$$

Since the orifices move with a velocity αr, the velocity with reference to a fixed point is $v - \alpha r$.

If G be the weight per cubic foot, the momentum or mass times the velocity is

$$\frac{GQ}{g}(v - \alpha r)$$

This mass moves with an angular velocity α and arm r, hence the work done per second in rotating the wheel is

$$\frac{GQ}{g}(v - \alpha r)\alpha r \text{ foot-pounds.}$$

The work expended by the water-fall is GQh.

Hence the efficiency

$$\eta = \frac{(v - \alpha r)\alpha r}{gh}$$

This increases as αr increases, or the maximum efficiency is reached when the velocity is infinite. The friction considerably reduces these results, and experiment indicates the greatest efficiency when $\alpha r = \sqrt{2gh}$. In which case, by substitution, we should have

$$\eta = 0.828.$$

The best efficiency realized in practice with these wheels is about 0.60.

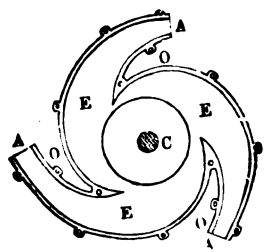

FIG. 158.—SCOTTISH TURBINE.

The Scottish turbine, shown in Fig. 116 in section, is a reaction-wheel with three discharge-jets, the water being supplied from a tube filled with water under pressure beneath the wheel.

249. The Hydraulic Ram.—The hydraulic ram is a machine so arranged that a quantity of water falling a height h forces a smaller quantity through a greater height h'.

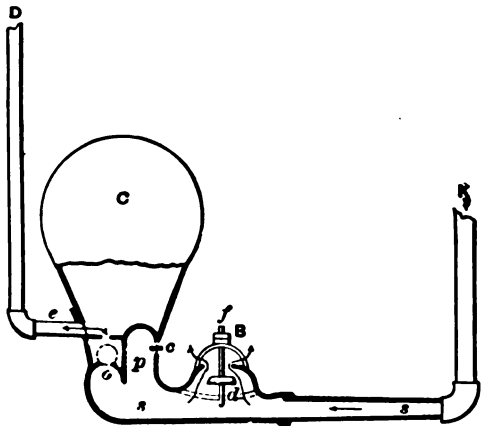

FIG. 159.—HYDRAULIC RAM.

The essential parts of the hydraulic ram are: 1. The air-chamber C, connected with the discharge-pipe eD, and provided with a clack or check-valve o, opening into the chamber C from the pipe ss.

2. The waste-valve, Bd, is a weighted clack or check-valve, opening inward and connected to a stem df; on the stem is a nut or cotter at f to regulate the length of stroke, i.e., amount of opening of the waste-valve.

3. The supply-pipe ss, that leads to a reservoir from which the supply is derived, should be of considerable length. If it is very short when laid in a straight line, bends must be made to secure additional length, and also to present some resistance to the backward wave-motion; its length must not be less than five times the supply-head. The working parts of the ram are the check-valve o and the waste-valve dB; these parts move in opposite directions, and alternately.

The action of the ram is explained as follows:

Water is supplied the ram by the pipe *ss*; the waste-valve *dB* being open, the water escapes with a velocity due to the height *h*. The water escaping at *d* suddenly closes the waste-valve. The acquired momentum of the moving column of water in the pipe *ss* is sufficient to raise the valve *o* and discharge a portion of its weight to a height *h'*. As soon as the pressure is reduced the valve *o* closes, the waste-valve *dB* opens and the water again flows down the pipe *ss*. These motions are produced with regularity, and the water acquires a backward and forward wave-motion in the pipe *ss*. A small air-chamber at *p*, with a small check-valve opening inward at *c* to supply the chamber with air, are found to add to its efficiency.

The wave-motion has been utilized to operate a piston backward and forward beyond the waste-valve, the piston being utilized as a pump in raising water from a different supply.

Formulæ.—Let *h* equal the height of the reservoir above the discharge-valve of the ram, *h'* the height to which the water is raised above reservoir, *Q* the total water supplied to the ram per second, *q* the amount raised to the height *h'*, *G* the weight per cubic foot. Then the useful work equals Gqh'; the work which the water is capable of doing equals $Gh(Q-q)$.

The efficiency

$$\eta = \frac{qh'}{(Q-q)h}.$$

Rankine (see Steam-engine, page 212) gives the following formulæ for obtaining the dimensions of a ram:

Let *L* equal length of supply-pipe, *D* the diameter of supply-pipe in feet; other symbols as above. Then

$$D = \sqrt{1.63Q}, \qquad L = h + h' + \frac{2h'}{h}.$$

Volume of air-chamber *C* equals volume of feed-pipe.

250. Methods of Testing Water-motors.—The methods of testing hydraulic motors require in all cases the measure

ment (1) of volume or weight of the water discharged, (2) of the net head, or pressure acting on the motor, or (3) the velocity of discharge. From these measurements may be computed the *energy received* by the motor, by the formulas already given.

1. *Measurement of the Water* may be made in the case of small motors by receiving the discharge in tanks standing on scales; two tanks will be required, one of which is filling while the other is emptying. Temperature observations must be taken, and from the known weight and temperature the volume (Q) may be computed, if required. The tanks may be previously calibrated by filling to a known point, and be so connected that any excess will pass into the tank recently emptied, in which case a method similar to the above may be used without scales.

The measurement will usually have to be made by discharging over *weirs* (see page 274) or through *nozzles* or *Venturi tubes;* this will be especially true for large motors.

With water-pressure engines an approximate measurement may be made by the piston-displacement, corrected for slip. A discussion of the effect of slip is to be found on page 302.

2. *Measurement of the Head* (h) may be made, in the first place, by taking a *series of levels* from standing water in the tank or dam above, to the level of the water in the tail-race. This measurement must be corrected for loss of head by friction in the pipes, or by flowing over obstructions, etc., this at best can be made only in an approximate manner. To secure the full effects of the head, some turbine-wheels are set with draught or suction tubes leading from the wheel to the water-level in the tail-race; this will not affect the method of measuring the head. The head acting on the wheel is measured most accurately by a calibrated pressure-gauge, placed in the supply-pipe near the motor. The reading of this gauge if merely attached to the supply-pipe in the usual manner, would be that due to the pressure-head only, and would be less than the true head acting on the pipe. By inserting a tube well into the current, and bent so as to face the current, thus forming a Pitot

tube (Article 222, page 292), the pressure will be increased the amount due to the velocity-head, and the gauge if attached to this tube will give the pressure corresponding to the actual head. To the head so obtained must be added the distance from the centre of the gauge to the level of the water in the tail-race. In case the draught-tube is used, a vacuum gauge or mercury manometer can be attached, and the suction-head calculated from the gauge-reading may be compared with the measured distance. In case two gauges are used, the vertical distance between them must be measured, and considered a portion of the head.

To obtain the head corresponding to a given pressure, in pounds per square inch, multiply the gauge-reading by the height, in feet, of water corresponding to one pound of pressure.

One pound of pressure per square inch corresponds to 2.308, 2.309, 2.31, 2.312, 2.315, 2.319, and 2.32 feet of head of water at the temperatures of 40°, 50°, 60°, 70°, 80°, 90°, and 100° F., respectively.

The head of one inch of mercury corresponds to 1.13 feet of water at 75° F.

Knowing the quantity or weight of discharge and the head, the *energy received* may be computed by any one of the four forms in equation (1), Article 237, p. 309.

3. *The velocity of discharge* can seldom be measured directly; it can be computed from measures of the pressure or net head, since the velocity $V = \sqrt{2gh}$. It is rarely of importance.

In case the motor is supplied with water through a nozzle, its least area may be determined by measurement; then the quantity discharged may be computed as the product of velocity, least area, and coefficient. (See Article 204, p. 275.)

251. Special Tests.—*Backus or Pelton Motors.*—*Apparatus needed.*—Pressure-gauges, two receiving tanks on scales or small weirs, Prony brake, pipes to remove water, thermometer.

Testing Directions.—Measure nozzle; note its position and the angle at which jet will strike buckets; attach pressure gauge, and arrange to measure discharged water; attach Prony brake. Vary the head of water by throttling the supply: if

heads are required greater than will be given by the water-works pressure, they must be supplied by pumping with a steam-pump. Take four runs of one half-hour each, with heads varying by one fourth, the greatest to be attained. Obtain corrections to head for position of gauge. Make running start. Take observations once in five minutes of water discharged, temperature, gauge-readings, weight on Prony brake-arm, and number of revolutions.

In *report*, describe motor, with dimensions, method of testing; compute energy received in foot-pounds per minute and in horse-power; compute work done in the same units; compute efficiency of each run, also for varying velocity of perimeter.

Make a plot on cross-section paper, with work delivered in foot-pounds per minute as abscissæ, and heads as ordinates. Compare theoretical with actual efficiency.

Turbine Water-wheels.—Large weirs must be arranged with which the discharged water can be measured. A Prony brake is to be arranged to absorb the power from the wheel, or a large transmitting dynamometer may be provided to receive the power developed by the wheel. Measurements to be made as explained in Article 250.

Water-pressure Engines are to be tested essentially as described for the hydraulic ram. When used to operate a pump, indicator-diagrams are to be taken from both engine and pump ends, as explained in the chapter on steam-engine testing. From these can be computed the energy received by the pistons of the water-engine and that delivered from the piston of the pump. The quantity of water received will have to be measured independently.

Hydraulic Ram.—*Apparatus* as before, with additional pressure-gauge for discharge-pipe, means of measuring the water delivered and the water wasted.

Testing.—Measure head of water acting on the ram and of that delivered as explained. Make runs of one half-hour each, with varying heads of supply and delivery. Take observations once in five minutes of gauge on supply-pipe, on

delivery-pipe, of weir-readings or weights of water wasted, and of water delivered. Compute the energy received and work done expressed in foot-pounds per minute, and also the efficiency for each run.

In Report.—Describe the ram, method of testing, and draw a curve, with heads as ordinates and foot-pounds of work as abscissæ.

252. Forms for Tests of Hydraulic Motors.—The following form for log and results has been used by the author:

Efficiency test of.....Water-wheel.

Type..... Capacity..... Diam.....

At..... By } .....

Date..... } .....

Length of Brake-arm.....ft.; Weir zero.....; Temp. Water..... °F.

Q = ... DATA. $E = \frac{\text{D. H. P.}}{W \times H} \times 33{,}000$.

No.	Time.	Gate Opening.	Head on Wheel.		Depth on Weir.	Water used.		Brake-load (net).	Revolutions per minute.	H. P. developed by Wheel.	Efficiency, per cent.	Ratio of velocity of periphery of wheel to velocity due to head.
			Lbs.	Ft.		Cu. ft. per sec.	Lbs. per min.					
				h	d	Q	W	P	D	D.H.P.	E	

Form and dimensions of Buckets.... .....

Number of Buckets.....Form of Delivery-tube.....

Diameter..... .....

The following form for test of the Swain turbine is used at the Massachusetts Institute of Technology:

TEST ON SWAIN TURBINE.

No..... Date.....188..

	Time.	Reading of Counter.	Revolutions per.... Minutes.	Load on Brake.	Height of Water in Tank.	Height of Water in Wheel-pit.	Reading of Hook-gauge.	Hook-gauge Reading.	Temperature in Wheel-pit.
Total.....	.....	.....	.....	.....	.....	.....	.....	.....	.....
Average. .	.....	.....	.....	.....	.....	.....	.....	.....	.....
Corrected.	.....	.....	.....	.....	.....	.....	.....	.....	.....

Diameter of wheel.....ft. Radius of brake.... .....ft.
Crest of weir above floor of pit .....ft.
Width of weir and pit.....ft.
Correction for hook-gauge .....ft.

Observed depth on weir (corrected).....ft.
Total head acting on wheel.... .....ft.
Weight of 1 cubic foot water at.....° Fahr.....lbs.
Revolutions of wheel per minute.....
Quantity of water passing weir (uncorrected)..... .....cu. ft.
" " " " (corrected).....cu. ft.
Available work.....ft.-lbs. per sec.
Work at brake.....ft.-lbs. per sec.
Efficiency.....per cent.
Horse-power of wheel..... ... ...
Velocity due to head acting on wheel.....ft. per sec
Velocity of outside of wheel..... .....ft. per sec
Signed..... .....

253. Classification of Pumps.—The different classes of pumps correspond almost exactly to the different classes of water-motors, with the mechanical principles of operation reversed.

Ordinary reciprocating pumps correspond to water-engines; chain- and bucket-pumps, to water-wheels in which the water acts principally by weight. Scoop-wheels are similar to under-shot water-wheels, and centrifugal pumps to turbines. The various classes of pumps are as follows:

A. *Reciprocating*, divided according to the method of construction into *lift*, *force*, *combined lift and force*, *double-acting*, and *diaphragm*.

B. *Rotary*, divided into: (1) *inferential*, in which the water is urged forward by the velocity of the working parts of the pump, as in the centrifugal pump; (2) *positive*, in which all the water that passes the pump is lifted or forced by the working parts of the pump to a higher level; the working parts of these pumps are usually gears or cams meshing together. These pumps are often spoken of as rotary, in distinction from centrifugal.

Pumps are also classified by the power used to drive them. Thus, pumps driven directly by attached engines are termed *steam pumping-engines* or *steam-pumps;* those driven from running machinery by belts or gears are termed *power-pumps;* those operated by hand, *hand-pumps*.

254. Duty and Capacity.—The term *duty* is applied to the work done by steam-pumps. This term originally signified the number of pounds of water lifted one foot by the consumption of one bushel (94 pounds) of coal; more recently it has been the water lifted one foot by the consumption of 100 pounds of coal. It has, in recent tests, been customary to assume that each pound of coal evaporates ten pounds of water, from and at 212°, under atmospheric pressure. As each pound of water evaporated under such conditions requires 965.7 British thermal units,* and each B. T. U. is equivalent to 778 foot-pounds of work, a definite amount of work is done by 100 pounds of coal, equivalent to 965,700 B. T. U., or to 751,314,600 foot-pounds.

The duty of a power-pump, expressed in the same manner,

* A British thermal unit, symbol B. T. U., is the heat absorbed in raising one pound of water one degree Fahr. in temperature.

is the number of foot-pounds of water raised by 751,314,600 foot-pounds of energy expended on the pump and accessories.

A committee appointed by the American Society of Mechanical Engineers (see Vol. XI. of Transactions American Society Mechanical Engineers, p. 668) recommend that in a standard method of conducting duty trials, 1,000,000 thermal units, or 778,000,000 foot-pounds, be taken as the basis from which the duty is computed. This is equivalent to the evaporation of 10.35 pounds of water per pound of coal, from and at 212°, and is likely to be adopted in future trials, in which case the duty becomes the number of foot-pounds of water delivered for 1,000,000 British thermal units of energy supplied the plant.

The *capacity* of a pump is usually expressed as the number of gallons of water that can be raised against a specified head in 24 hours of time; a gallon being considered as equivalent to 8.3389 pounds at a temperature of 39.2°.

255. Measurement of Useful Work.—The useful work done by a pump is the product of the number of pounds of water delivered into the head through which it is raised.

The *head* is the total vertical distance in feet from the surface of the water-supply to the discharge, increased by friction. It is measured most accurately by pressure-gauge connected to a Pitot's tube (p. 292) with its nozzle facing the current inserted in the discharge pipe, near the pump, and by a vacuum gauge or manometer connected to the suction pipe. The head in feet is equal to the distance between these gauges plus the total readings of the gauges, reduced to equivalent heads of water (see p. 324).

The *water delivered* may be measured by discharging over a weir, or through a nozzle or tapering pipe called a *Venturi tube.* (See Article 204, p. 275.)

The discharge through a *Venturi tube* may be taken as 98 per cent of the theoretical discharge, that through a straight conical nozzle as 97.7 per cent.*

* See papers before Am. Soc. Civil Engineers, by Clemens Herschel, Nov. 1887 and Jan. 1888, and by J. R. Freeman, Nov. 1889.

Delivery measured from Piston-displacement.—Slip.—The water delivered in the case of piston-pumps is often computed by multiplying the total piston-displacement during the test by 1, minus the *slip*. The total piston-displacement is equal to the product of area of piston by length of strokes, by total number of single strokes. In piston-pumps the length of stroke is often variable, in which case especial means must be adopted to find the average length. The *slip* is the percentage that the actual delivery is less than the total piston-displacement; it can only be determined accurately by comparing the volume actually discharged with the total displacement. The slip is caused by air in suction-pipe, leakage past piston, leakage past valves in either suction- or discharge-pipe, and imperfect port-openings. The principal cause probably comes from leakage past the piston, and this leakage can often be determined by removing the cylinder-head, blocking the piston, subjecting it to the water-pressure for at least one hour, and measuring all the water that leaks past it. This test should be repeated for various positions in the stroke. The valve leakage can often be determined by a similar test. No air should be admitted to the suction-pipe.

A table of percentage of slip is given in Hill's Manual, published by the Harris-Corliss Engine Co., from which it is seen that the slip for large pumps is about two per cent, and that it varies from one to five per cent.

256. Efficiency-tests of Pumps.—An efficiency-test will require in each case measurements of, firstly, the energy or work supplied the pump; secondly, the useful work; thirdly, the lost work.

The difference in methods of testing the various classes of pumps, as described in Article 253, simply extends to the measurement of the power supplied the pump.

The *steam-pump*, or *steam pumping-engine*, is to be considered as a combination of the steam-engine with a pump. The power received by the pump is that delivered by the engine, and is determined by a steam-engine test. The method of testing steam pumping-engines, and standard method

of making duty-trials, as adopted by the American Society of Mechanical Engineers, will be given under special applications of the method of testing engines.

The *power-pump* receives its energy from machinery in operation; the energy received may be measured by a standardized transmitting-dynamometer (see Chapter VII.), or, in the case of a rotary or centrifugal pump, by mounting in a frame having a free angular motion, which is unaffected by the tension on the driving-belt. The resistance to rotation is obtained by a known weight on a known arm, and the power supplied in foot-pounds is the product of the circumference that might be described by the arm as radius, number of revolutions, and the weight. Such a framework is termed a *cradle-dynamometer.*

257. Special Efficiency-tests—Power-pumps.—*Efficiency-test of Centrifugal Pumps—Directions.*

Apparatus needed.—Pressure-gauge for delivery, manometer for suction, transmission-dynamometer, thermometer, weir for discharge.

Directions.—Connect suction-pipe to supply-tank, and arrange discharge with throttle-valve to deliver water over a weir. Connect delivery-gauge to an elongated air-chamber, which in turn is connected with the delivery-pipe, provided with a water gauge-glass opposite the pressure-gauge, and means of changing water-level and air-level.* Connect manometer or vacuum-gauge to suction-pipe; obtain vertical distance between these gauges. Arrange a standardized transmission-dynamometer to receive the power, and drive the pump.

During the test maintain the water in the air chamber at height of centre of the gauge.

Testing.—Set the machinery in operation; arrange the throttle-valve to give an approximate head of 50 feet. After uniform conditions are assumed, start the run; take readings once in five minutes of hook-gauge at weir, of temperature of water, of discharge-gauge, of suction-guage, of dynamometer

* See Test of Steam Pumping-engines.

or power-scale. Continue the run for one hour with uniform pressure on discharge-gauge.

Make a second run with an approximate head of 75 feet, and a third run with an approximate head of 100 feet.

Report.—In report, calculate efficiency, duty, and capacity for each head; draw a curve of each test, using power in foot-pounds as ordinates, and total water delivered as abscissæ. Describe the pump and method of testing.

Efficiency-test—Rotary Pump—Directions.—Apparatus and connections as for centrifugal pump, the power transmitted being measured either by a transmission-dynamometer, or by a balanced cradle-dynamometer; the water may be measured by a weir, or it may be delivered into two weighing tanks, one of which is filling, the other emptying, and the water weighed. Directions for the test are as in the preceding.

258. Form for Log and Report of Pump-tests.—The following form for data and report is used at the Massachusetts Institute of Technology for log and data of test on Webber centrifugal pump and on rotary power-pump:

TEST ON WEBBER CENTRIFUGAL PUMP.

No...... *Date*.....

No. of Gong.	Time.	Water.			Heads.				Emerson Power-scale.			
									Pumping.		Tare.	
		Hook-gauge Reading.	Depth of Water on Weir in feet.	Temperature at Weir.	Suction-gauge, ins. of mercury.	Discharge-gauge, lbs. per sq. in.	Actual Suction in feet.	Actual Head in feet.	Scale-reading.	Revolutions per minute.	Scale-reading.	Revolutions per minute.
Total..	...	.....	.....	.....	.....	.....	.....	.....	.....	.....	.....	.....
Av.....	...	.....	.....	.....	.....	.....	.....	.....	.....	.....	.....	.....
Cor....	...	.....	.....	.....	.....	.....	.....	.....	.....	.....	.....	.....

Diameter discharge-pipe.....ins

Transverse area discharge-pipe.....sq. ft

Distance between gauges.....ft

Crest of weir above bottom of channel.....ft.
Width of weir.....ft.
Revolutions of pump per minute.....
Water pumped in.....lbs
Duration of test.....mins.

Water
- Depth of water on weir.....ft.
- Temperature at weir (corrected).....° C. .....° F.

Heads.
- Suction-gauge (corrected).....ins. .....ft.
- Discharge-gauge (corrected).....lbs. .....ft.
- Actual suction.....ft.
- Actual head.....ft.

Power-scale
- Pumping.
  - Scale-reading.....lbs.
  - Revolutions per minute.....
- Tare.
  - Scale-reading.....lbs.
  - Revolutions per minute.....

Water pumped in ..... minutes.....lbs.
Capacity in gallons per minute.....
Total work by power-scale (pumping).....H. P.
Tare.....H. P.
Work given to pump.....H. P.
Work delivered by pump.....H. P.
Efficiency.....per cent.
Duty (ft.-lbs. per 1,000,000 B. T. U.).....

Signed.....

LOG OF TEST ON ROTARY PUMP.

No..... *Date*.....

No. of Gong.	Time.	Power-scale.						Gauges.		Orifices.	
		Pumping.			Tare.			Suction, inches mercury	Delivery, lbs. per sq. in.	Head, in feet.	Temperature.
		Counter	Revolutions.	Weight.	C.	R.	W.				
Total...	.....	.....	.....	.....	...	...	...	.....	.....	... ...	.....
Av. ...	.....	.....	.....	.....	...	...	...	.....	.....	... ...	.....
Cor.. ...	.....	.....	.....	.....	...	...	...	.....	.....	... ...	.....

RESULTS OF TEST ON ROTARY PUMP.

No...... *Date*.....

Duration of test.....min.
Power-scale, pumping, revolutions per minute.....
" " weight.....lbs.
" tare, revolutions per minute.....
" " weight.....lbs.
Suction-head by gauge.....inches mercury.....ft. H_2O
Discharge-head by gauge.....lbs. per sq. in ..... "
Head on orifices..... "
Temperature.....° C. .....° F.
Revolutions of pump per minute.....
Area of discharge at gauge.....sq. ft.
Vertical distance between gauges.....ft.
Diameter of orifices, *a*...., *b*...., *c*...., *d*...., *e*...., *f*...., *g*...., *h*...., *i*....
Coefficients, *a*...., *b*...., *c*...., *d*...., *e*...., *f*...., *g*...., *h*...., *i*....
Constant for power-scale.....ft.
Power-pumping, by scale.....H. P.
Tare.....H. P.
Power given to pump.....H. P.
Velocity-head of discharge.....ft.
Total head = press. heads + vel. head + vert. dist. bet. gauges..... ft.
Water pumped.....lbs. per sec.
Work done by pump.....H. P
Efficiency of pump.....per cent.
Capacity of pump in gallons per minute.....
Duty of pump (ft.-lbs. per 1,000,000 B. T. U.).....

Signed.....

PART II.

METHODS OF TESTING THE STEAM-ENGINE.

CHAPTERS X TO XXII.

CHAPTER X.

DEFINITIONS OF THERMODYNAMIC TERMS.

259. General Remarks.—The methods of testing the steam-engine which are given here presume an accurate knowledge of the principles of action of the engine, an acquaintance with the details of its mechanism, and a knowledge of the thermodynamic principles which relate to the transformation of heat-energy into work. In connection with the methods of testing, the student is advised to read one or more of the following books:

Manual of the Steam-engine, by R. H. Thurston. 2 vols. N. Y., J. Wiley & Sons.

Manual of Steam-boilers. *Ibid.*

Engine and Boiler Trials. *Ibid.*

Étude Expérimentale Calorimétrique de la Machine à Vapeur, par V. Dwelshauvers-Dery. Paris, Gauthier-Villars et Fils.

Steam-engine, by D. K. Clark. 2 vols. N. Y., Blackie & Co.

Steam-engine, by C. V. Holmes. 1 vol. London, Longmans, Green & Co.

Steam-engine, by J. M. Rankine. 1 vol. London, Chas. Griffin & Co.

Steam-making, by C. A. Smith. 1 vol. Chicago, American Engineer.

Steam-using. *Ibid.*

Steam-engine, by James H. Cotterill. London, E. & F. N. Spon.
Thermodynamics, by C. H. Peabody. N. Y., J. Wiley & Sons.
Thermodynamics, by De Volson Wood. N. Y., J. Wiley & Sons.
Thermodynamics, by R. Clausius. N. Y., Macmillan.
Steam-tables, by C. H. Peabody. N. Y., J. Wiley & Sons.
Handy Tables, by R. H. Thurston. N. Y., J. Wiley & Sons.

260. Relations of Units of Pressure.—The term *pressure* as employed in engineering, refers to the force tending to compress a body, and is expressed as follows: (1) In pounds per square inch; (2) In pounds per square foot; (3) In inches of mercury; (4) In feet or inches of water.

The value of these different units of pressure are as follows:

TABLE SHOWING RELATION BETWEEN PRESSURE EXPRESSED IN POUNDS, AND THAT EXPRESSED IN INCHES OF MERCURY, OR FEET OF WATER.

Pressure in pounds per sq. inch.	Pressure in pounds per sq. foot.	70° Fah.		
		Inches of mercury.	Feet of water.	Inches of water.
1	144	2.0378	2.307	27.68
2	288	4.0756	4.614	55.36
3	432	6.1134	6.921	83.04
4	576	8.0512	9.23	110.72
5	720	10.1890	11.54	138.40
6	864	12.2268	13.85	166.08
7	1008	14.2646	16.15	193.76
8	1152	16.3024	18.46	221.44
9	1296	18.3402	20.76	249.12
10	1440	20.3781	23.07	276.80

The *barometer pressure* is that of the atmosphere in inches of mercury reckoned from a vacuum. At the sea-level, latitude of Paris, the normal reading of the barometer is 29.92 inches, corresponding to a pressure of 14.7 pounds per square inch.

Gauge or Manometer pressure is reckoned from the atmospheric pressure.

Absolute pressure is measured from a vacuum, and is equal to the sum of gauge-pressure and barometer readings expressed

in the same units. Absolute pressure is always meant unless otherwise specified.

Pressure below the atmosphere is usually reckoned in inches of mercury from the atmospheric pressure, so that 29.92 inches would correspond to a perfect vacuum at sea-level, latitude 49°.

261. Heat and Temperature.—The term *heat* is used sometimes as referring to a familiar sensation, and again as applying to a certain form of energy which is capable of producing the sensation. In this treatise it is used in the latter sense only.

Temperature is essentially different from heat, and is merely one of its qualities; it is difficult to define, but two bodies are of equal temperature when there is no tendency to the transfer of heat from one to the other. Temperature is measured by the expansion of some substance in an instrument termed a thermometer. Two points, that of melting ice and of steam from water boiling at atmospheric pressure, are fixed temperatures on all scales of thermometry. The expansion between these points is divided into various parts according to the scale adopted, and each part is termed a degree.

The following thermometric scales are in use in different portions of the world:

Fixed Points, Temperature of Water.	Fahrenheit.	Centigrade.	Réaumur.
Degrees between freezing and boiling point	180	100	80
Temperature at freezing point	32	0	0
Comparative length 1 degree	1	$\frac{5}{9}$	$\frac{9}{4}$
" " "	$\frac{9}{5}$	1	$\frac{5}{4}$
" " "	$\frac{4}{9}$	$\frac{4}{5}$	1

Degrees of temperature taken on one scale can easily be reduced to any other; thus, let t_f be the temperature of a body on the Fahrenheit scale, t_c on the Centigrade scale, and t_r on the Réamur scale. We shall have, from the preceding table,

$$t_f = \tfrac{9}{5}t_c + 32°;$$
$$t_c = \tfrac{5}{9}(t_f - 32°);$$
$$t_f = \tfrac{9}{4}t_r + 32°.$$

The Fahrenheit thermometer is used principally by English-speaking people, and unless otherwise mentioned is the one used in this treatise.

The *Thermometric Substances* principally used are mercury, alcohol, and air, from the expansion of which the temperature is obtained.

Absolute Zero.—This quantity is fixed by reasoning as the point where gaseous elasticity or expansion would be zero. This is 492°, more exactly 491.8°, of the Fahrenheit scale or 273° +* of the Centigrade scale below the freezing-point of water, so that in the Fahrenheit scale the absolute temperature is 460° + the reading of the thermometer, and on the Centigrade scale 273° + the reading of the thermometer.

Absolute Temperature, on any scale, is temperature reckoned from absolute zero.

262. Specific Heat.—Specific heat is the ratio of that required to raise a pound one degree in temperature compared with that required to raise one pound of water from 60° to 61° Fahr.

Specific heat of water is not quite constant, but varies as follows: †

Centigrade.	Fahrenheit.	Specific Heat.	Centigrade.	Fahrenheit.	Specific Heat.
0°	32°	1.0072	30°	86°	0.9954
5°	41°	1.0044	35°	95°	0.9982
10°	50°	1.0016	40°	104°	1.0000
15°	59°	1.0000	45°	113°	1.008
20°	68°	0.9984	155°	311°	1.046
25°	77°	0.9948	200°	392°	1.046

Specific heat of saturated steam at atmospheric pressure was found by Regnault to equal 0.478. Investigations made at Sibley College show that the specific heat of superheated steam increases with the pressure and temperature.

The *heat contained* in different bodies of the same tempera-

* Encyc. Brit., Vol. XI. p. 573. † See Peabody's Steam-tables.

ture, or in the same body in its liquid and gaseous condition, is quite different and cannot be measured by the thermometer. Thus in equal weights of water and iron at the same temperature, the heat in the water is several times that in the iron. This is known because in cooling a degree in temperature, water will heat a much greater weight of some other substance.

263. Mechanical Equivalent of Heat.—The experiments made by Rumford and Joule established the fact that heat-energy could be transformed into work, or *vice versa*. The results of Joule's latest determination gave the mechanical work equivalent to the heating of one pound of water one degree Fahr. in temperature as 774 foot-pounds, while the later and more refined determinations of Rowland, reduced to 45° of latitude and to the sea-level, make the mechanical work equivalent to the raising the temperature of one pound of water from 62° to 63° Fahr. to be 778 foot-pounds. The heating of one pound of water one degree, from 39° to 40° Fahr., is termed a British thermal unit, B. T. U., and this is equivalent in mechanical work to 778 foot-pounds. This number is represented by J and its reciprocal by A throughout this work.

The heat needed for raising one kilogram of water one degree Centigrade is termed a *calorie*, and this is equivalent to 426.9 foot-pounds.

In some treatises a British thermal unit is the heat required to raise one pound of water from 62° to 63° Fahr., which differs little from that defined above.

264. Relations of Pressure and Temperature of Steam.—There is a definite relation between the temperature and pressure of steam in its normal or saturated condition. This relation was very carefully investigated 1836–42 by M. V. Regnault in Paris by a series of careful experiments made on a large scale. These experiments form the basis of our experimental knowledge of the properties of steam.

The properties of steam are also shown by the thermodynamic laws, and are given in tables of Rankine, Clausius, M. V. Dwelshauvers-Dery, Peabody, and Buel.

The following empirical formula, deduced from Regnault's

experiments, gives the relation between the temperature and pressure of steam at a latitude of 45° :

For steam* from 32° to 212° Fahr. pressure in pounds per square inch,

$$\log p = a - ba^T + cB^T,$$

in which $a = 3.025908$, $\log b = 0.61174$, $\log c = 8.13204 - 10$, $\log a = 9.998181015 - 10$, $\log B = 0.0038134$, $T = t - 32°$.

For steam from 212° to 428° Fahr.,

$$\log p = a_1 - b_1a_1^T + c_1B_1^T,$$

in which $a_1 = 3.743976$, $\log b_1 = 0.4120021$, $\log c_1 = 7.74168 - 10$, $\log a_1 = 9.998561831 - 10$, $\log B_1 = 0.0042454$, $T = t - 212°$.

265. Properties of Steam.—*Definitions.*—Steam occurs in two different conditions: 1, saturated; 2, superheated.

1. *Dry and Saturated Steam*, or, as frequently called, *dry steam*, is the vapor of water at point of precipitation, and may be considered the normal condition of steam.

Saturated steam of any pressure is at the lowest temperature and possesses the least specific volume and the greatest density consistent with that pressure. The slightest decrease in total heat results in partial condensation, forming what is termed *moist* or *wet steam*, in distinction from *dry steam*. Thus saturated steam may be either *wet* or *dry*. The percentage of dry steam in a mass of wet steam is termed its *quality*.

2. *Superheated steam* has properties similar in every respect to those of a perfect gas. Its temperature is higher, its specific volume greater and its density less than saturated steam of the same pressure.

Steam-tables give the properties of dry saturated steam only and usually arranged with absolute pressure as the argument or given quantity. The important properties are as follows:

(*a*) *Total Heat* (symbol, λ).—This is the amount of heat required to convert one pound of water from 32° into saturated

* Steam-tables, by Prof. Cecil H. Peabody.

steam at a pressure P. If t is the temperature of the steam, the total heat, λ, is calculated by an empirical formula based on the experiments of Regnault. Expressed in English units,

$$\lambda = 1081.4 + 0.305t.$$

(*b*) *Heat of the Liquid* (q) is the number of thermal units used in heating one pound of water from 32° Fahr. to the temperature required to generate steam. According to Regnault,

$$q = t + 0.00002t^2 + 0.0000003t^3$$

for Centigrade units. And according to Rankine for English units when t_1 is the initial and t the final temperature,

$$q = t - t_1 + 0.000000103[(t - 39°.1)^3 - (t_1 - 39°.1)^3].$$

(*c*) *Internal Latent Heat* (ρ).—This is the work done, measured in thermal units, in separating the molecules of the steam beyond the range of mutual attraction. It is calculated from the formula

$$\rho = 1061 - 0.791t.$$

(*d*) *External Latent Heat* (APu).—This is the work, expressed in heat-units, of expanding the steam against an external pressure which is equal to that of the steam generated. Thus, let $u = s - \sigma$ be the difference in volume of a pound of steam, s, and a pound of water, σ, at any pressure per square foot, P. Then the work of expansion will be Pu foot-pounds or APu thermal units. According to Zeuner,

$$APu = 20.91 + 1.096(t - q).$$

(*e*) *Heat of the Steam* (L).—This is the heat which the steam actually contains; it is the total heat less the external latent heat. In thermal units,

$$L = \lambda - APu = q + \rho, \quad \text{since} \quad \lambda = q + APu + \rho.$$

(*f*) *Heat of Vaporization*, or *total latent heat*, (r,) is that portion of the total heat which is required to convert one pound of water at any temperature into saturated steam at the same temperature and at a pressure P; it is the sum of external and internal latent heats, or the total heat less the heat of the liquid. That is,

$$r = \rho + APu = \lambda - q.$$

A formula for calculating r is

$$r = 1081.4 + 0.305t - q.$$

(*g*) *Specific Volumes* and *Density of Steam.*—These quantities are usually calculated from thermodynamic equations.

$$s = \frac{r}{AT} \cdot \frac{1}{\frac{dp}{dt}} + \sigma.$$

s = volume of one pound of steam, σ = volume of one pound of water.

It will be noticed that the different steam tables differ principally in respect to these quantities.

THERMODYNAMIC CONDITIONS, TEMPERATURE AND ENTROPY.

266. Isothermal is a term used to denote a condition in which the temperature remains constant; the total amount of heat, or the pressure, may vary.

Adiabatic is a term used to denote the condition in which the total quantity of heat is unchanged by heat-transfer. It may, however, be changed by transformation into work and *vice versa.*

Temperature is the scale used to determine the relative values of different isothermal conditions; and change of tem

perature is the change which occurs in passing from one isothermal condition to another.

Entropy is the scale used to determine the relative values of different adiabatic conditions; and change of entropy is the change which occurs in passing from one adiabatic condition to another.

Change of temperature can be measured by the expansion of some thermometric substance; but change of *entropy*, which is just as real, cannot be measured or represented in any simple manner. If we represent the entropy by ϕ, the absolute temperature by T, the heat at any adiabatic condition by Q, then by the second law of thermodynamics

$$d\phi = \frac{dQ}{T}. \quad . \quad . \quad . \quad . \quad . \quad . \quad . \quad . \quad (1)$$

In case of a liquid, $dQ = cdq$, in which c is the specific heat, and q the temperature. In this case denote the entropy by θ. Then

$$\theta = \int_0^t \frac{cdq}{T}. \quad . \quad . \quad . \quad . \quad . \quad . \quad . \quad (2)$$

For water this is readily calculated.

In the case of steam the entropy, or change of entropy from water at the freezing-point to steam at any pressure is equal to the entropy of the liquid, θ, plus that of the steam, $\frac{xr}{T}$. In which x is the quality of the steam, or per cent of dry steam.

In this case

$$\phi = \frac{xr}{T} + \theta = \frac{xr}{T} + \int_0 \frac{cdt}{T}.$$

In any other case

$$\phi_1 = \frac{x_1 r_1}{T_1} + \theta_1.$$

Change of entropy,

$$\phi - \phi_1 = \frac{xr}{T} + \theta - \frac{x_1 r_1}{T_1} - \theta_1.$$

A short table giving the value of the entropy of the liquid is to be found in Article 230, page 301.

267. Steam-tables.—The numerical values representing the various properties of steam, in relation to its pressure, are arranged in the form of tables termed *steam-tables*. The relative accuracy of these various steam tables is discussed at length by Prof. D. S. Jacobus in Vol. XII. Transactions of American Society Mechanical Engineers, page 590, from which it is seen that the table compiled by Mr. Chas. T. Porter represents the experimental investigations of Regnault most accurately; but that possibly for scientific investigations the tables of Peabody, Dery, and Buel, which are founded on thermodynamical laws, are somewhat more accurate. Practically the tables are accordant for all working pressures and temperatures of steam: the difference is principally in the values given for the density. The tables of Chas. T. Porter* have been adopted as the tables to be used in reporting results of boiler trials and of duty trials of pumping engines, by the American Society of Mechanical Engineers (see Transactions, Vol. VI., and also Vol. XII.), and for such tests the standard reports should be calculated from those tables. These tables are, however, deficient for scientific purposes, since they omit values of some of the important properties of steam. In the Appendix is printed the table by Porter, and also the table by Buel as printed in Weisbach's work on the steam-engine and in Vol. I. of Thurston's Manual of the Steam-engine.

* The Richards Steam-engine Indicator, by Chas. T. Porter.

CHAPTER XI.

MEASUREMENT OF PRESSURE.

268. Manometers.—The term *manometer* is frequently applied to any apparatus for the measurement of pressure, although it is the practice of American engineers to use this term only for short columns filled with mercury or water and used to measure small pressures. The pressure is measured, in all manometers used for engineering purposes, above the atmospheric pressure, and this determination must be increased by the pressure equivalent to the barometer-reading to give absolute pressure. The manometers in common use are glass or metal tubes, either U-shape in form as in Fig. 160, or straight and connected to a cistern of large cross-section as shown in Fig. 162.

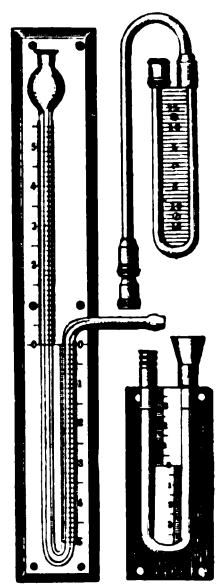

FIG. 160.—U-SHAPED MANOMETER-TUBES.

Pressures below the atmosphere can be measured equally well by connecting to the long branch of the tube and leaving the short branch open to the atmosphere.

269. U-shaped Manometer.—In the U-shaped tube, with any form as shown in Fig. 160 or Fig. 161,

water or mercury is poured in both branches of the tube, the pressure is applied to the top of one of the tubes, and the liquid rises a corresponding distance in the other. When no pressure is applied, the liquid will stand at the same level in both tubes; when pressure is applied, it is depressed in one tube and raised in the other. The pressure corresponds to the vertical distance between the surface of the liquid in the two tubes and can be reduced, as explained in Article 260, to pounds of pressure per square inch.

FIG. 161. U-SHAPED MANOMETER.

An inch of water at a temperature of 70° Fahr. corresponds to a pressure of 0.036 pound; an inch of mercury, to 0.493 pound. The principle of action of the U-shaped manometer-tubes is as follows: Consider the atmospheric pressure as acting on one side of the tube, and the pressure which is to be measured and which is greater or less than atmospheric as acting on the other side. The total absolute pressure in each branch of the tube must be equal, consequently enough liquid will flow from the side of the greater to the side of the less to maintain equilibrium. Thus let p be the atmospheric pressure; p_1, the absolute pressure to be measured, expressed in inches of water or mercury; h, the height of the column on the side of the atmosphere; h_1, the height on the side of the pressure. Then

$$p + h = p_1 + h_1,$$

from which

$$p_1 - p = h - h_1.$$

The U-shaped tube, in construction similar to *Hoadley's draught-gauge*, Art. 275, can be used with *two liquids of different densities*, using the heavier liquid on the side of the lighter pressure. Let d_1 denote the density of the lighter liquid, and d that of the heavier; h_1 and h, the corresponding

heights of the columns. We shall have as before, taking all measurements from the lower surface of the heavier liquid,

$$p_1 + hd = p + h_1 d_1,$$

from which

$$p_1 - p = h_1 d_1 - hd.$$

This instrument is much more delicate and is better suited for measuring small differences of pressure than when a single liquid is used; the reason for which will be readily seen if we consider an example. Suppose that water be used as the heavier liquid, of which the specific gravity is 1, and that crude olive-oil be used as the lighter liquid, of which the specific gravity is 0.916. Suppose that all pressures are measured in equivalent height of a water column expressed in inches, and that $h = 6$ inches, $p_1 - p = \frac{1}{2}$ inch; then h_1, which is the difference of level of the water in the two branches, will be $\frac{1}{2} + 6.(0.916) = 6.0$ inches, whereas it would have been but one-half inch had there been only water, or 0.545 if the liquid had been olive-oil. By making the density of the liquids more and more nearly equal the instrument will become more and more delicate. A dilute mixture of water and alcohol of which the density must be determined (see Article 275, page 354), for the heavier, and of crude olive-oil for the lighter, gives excellent results. If the instrument can be so manipulated that $h_1 = h$,

$$p_1 - p = h(d_1 - d),$$

and the calculation becomes very simple, as in that case the reading would have to be multiplied only by the differences of the densities of the two liquids.

270. Cistern-manometer.—In the case of a manometer of the form of Fig. 162 or Fig. 163, the *cistern* or vessel into

which the tube is connected has a large area relative to that of the tube. Pressure is applied to the top of the liquid in the cistern, the surface of which will be depressed a small amount, and the liquid in the tube will be raised an amount sufficient to balance this pressure. The pressure corresponds to the vertical distance from the surface of the liquid in the tube to that in the cistern. As the liquid is not usually in sight in the cistern, a correction is necessary to the readings in order to find the correct height corresponding to a given pressure. This correction is calculated as follows: Let A equal the area of surface of the liquid in the cistern, a the area of the manometer-tube, H the fall of liquid in the cistern, h the corresponding rise of liquid in the tube, b the height required for one pound of pressure (see Article 260, page 336), p the number of pounds of pressure. We have then

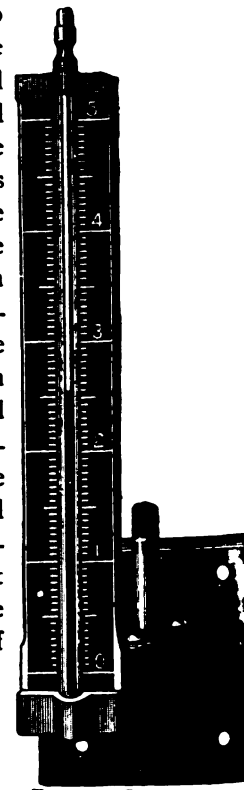

FIG. 162.—CISTERN-MANOMETER.

$$\frac{H+h}{b}=p;$$

and since the tube is supplied by liquid from the cistern,

$$HA = ha.$$

Eliminating H in the two equations,

$$h=\frac{Apb}{A+a}.$$

If p = one pound,

$$h=\frac{Ab}{A+a},$$

which is the length the graduation should be made to allow for fall of mercury in the cistern and give a value equal to one pound of pressure.

To make this correction uniformly applicable the area of cross-section of both tube and cistern should remain uniform.

271. Mercury Columns.—Mercury columns, as used in the laboratories, are usually made on the principle of the cistern-manometer. The tube is very long and made of glass or steel carefully bored out to a uniform diameter. If the tube is of glass, the height of mercury can be readily perceived and read; if of steel, the height of the mercury is usually obtained by a float, which in some instances is connected to a needle which moves around a graduated dial.

In some of these instruments electric connections are broken whenever the mercury passes a certain point, and an automatic register of the reading is made. Fig. 163 shows the usual form of the mercury column, in which the pressure is applied in the upper part of the cistern, so as to come directly on the top of the mercury. In the case of a glass column the graduations are usually made on an attached scale, and are corrected as explained in Article 270 for the fall of mercury in the cistern.

272. Corrections to the Mercury Column.—The mercury column is usually the standard by which all pressure-gauges are compared, and its accuracy should be thoroughly established in every particular.

The requirements for an accurate mercury column are:

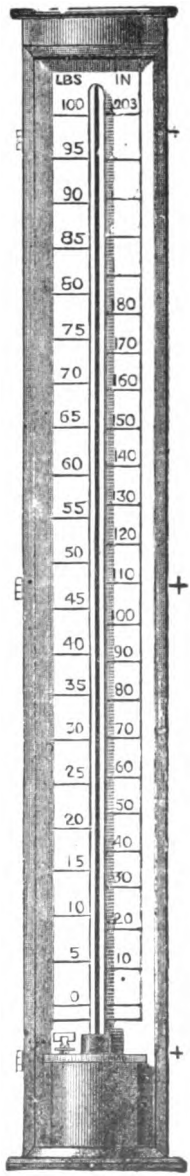

FIG. 163.—MERCURY COLUMN.

1. Uniform bore in cistern and tube.

2. Accurate graduations, spaced as explained in Article 270. As it is impossible to make the graduations perfectly accurate, the error in this scale should be carefully determined, and the readings corrected accordingly.

The *corrections* to the readings are:

1. For expansion of the mercury and tube due to increase of temperature.

The method of correcting for expansion of the mercury and the material enclosing it would be as follows:

Let λ equal the coefficient of lineal expansion of the mercury, and 3λ that of the cubical expansion per degree Fahr.; let δ equal the coefficient of lineal expansion of the metal of the cistern, and δ' that of the metal of the tube. Let H' equal the depression in the cistern, h' the corresponding elevation in the tube corresponding to a pressure of one pound, and a difference of level of b'. Let b equal the difference of level corresponding to a pressure of one pound at a temperature of 60° Fahr. Then, as before,

$$h' = \frac{A'b'}{a' + A'} = \frac{A(1 + 2\delta)b(1 + 3\lambda)}{a(1 + 2\delta') + A(1 + 2\delta)}.$$

2. Correction for the capillary action of the tube. This force depresses the mercury in the tube a distance which decreases rapidly as the diameter increases.

The amount of this depression is given in Loomis's Meteorology as follows:

Diameter of Tube. Inch.	Depression. Inch.	Diameter of Tube. Inch.	Depression. Inch.
0.05	0.295	0.40	0.015
0.10	0.141	0.45	0.012
0.15	0.087	0.50	0.008
0.20	0.058	0.60	0.004
0.25	0.041	0.70	0.0023
0.30	0.029	0.80	0.0012
0.35	0.021		

3. There might also be considered a very slight correction due to the fact that the force of gravity in different latitudes varies somewhat. Since the weight of a given mass of mercury is equal to the product of the mass into the force of gravity, it will vary directly as the force of gravity, or, in other words, the assumed weight of mercury may not be exactly correct. This correction is a refinement not necessary in usual tests.

4. Difference of barometer-readings at top and bottom of the tube might make some difference.

While it is well to give all these corrections their true weight, yet a false impression should not be incurred concerning their importance. It is hardly probable that the corrections for change in temperature, or corrections for the difference in the force of gravity from that at the sea-level on the equator, would in any event make a sensible difference in the readings.

273. Direct-reading Draught-gauges. — The ascending force which causes smoke or heated air to rise in a chimney is called the draught. The pressure in such a case is below that of the atmosphere, and is usually measured in inches of water. Draught-gauges are U-shaped manometers adapted to measure pressures less than that of the atmosphere. See Figs. 160 and 161. To use this manometer, water is poured into the tube until it stands at the point marked 0, Fig. 161; one side is then connected by a pipe to the flue or chimney of which the draught is to be measured. The difference of level of the water, as shown by the manometer-tubes, is the draught expressed in inches of water. An inch of water at a temperature of 70° Fahr. corresponds to 0.036 pound.

Allen's Draught-gauge.—A very complete draught-gauge of the U-shaped manometer type, with attached thermometer and a movable scale the zero of which can be set to correspond to the lower water surface, is shown in Fig. 164 as designed by J. M. Allen of the Hartford Boiler Insurance Co.

A draught-gauge designed by the author is shown in Fig. 164*a*, which is arranged so that one scale will give difference in elevation of the liquid in the two columns. This is accomplished

by setting the collar F to the lower meniscus of the liquid by the screw E; then by setting the collar H to the meniscus of the liquid in the other column by means of the micrometer-screw R, the height of the column may be read on the attached scale and the

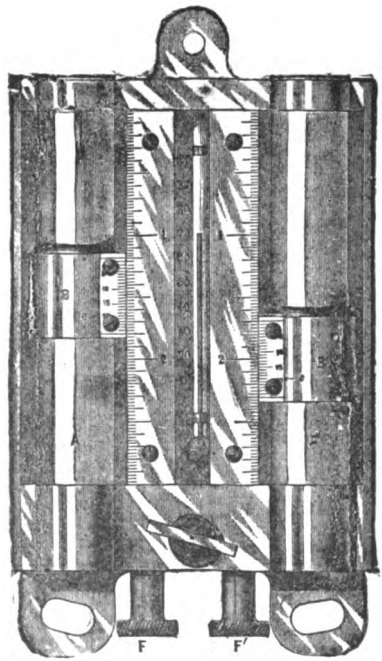

FIG. 164.—DRAUGHT-GAUGE.

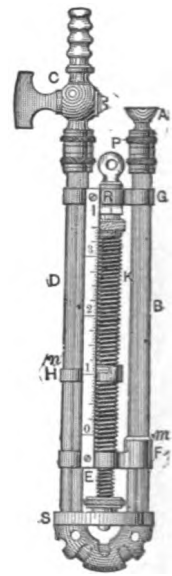

FIG. 164a.—DRAUGHT-GAUGE.

micrometer-screw R. The reflection from the two edges of the meniscus enables the scales to be set with great accuracy. The inches and tenths of inches are read on the attached scale, the hundredths of inches by the graduations of the micrometer-screw R.

274. Draught-gauges with Diagonal and Level Scales. — *Peclét's Draught-gauge.*—A draught-gauge with diagonal scale is shown in Fig. 165. It consists of a bottle, A, with a mouth-piece near the bottom into which a tube, EB, is inserted with any convenient inclination. The upper end of the tube is bent upward, as at BK, and connected with a rubber tube, KC, leading to the chimney. The tube is fastened to a convenient support,

and a level, *D*, is attached. To use the instrument, first level it, note reading of scale, then attach it to the chimney, and take the reading, which will be, if the inclination is one to five,

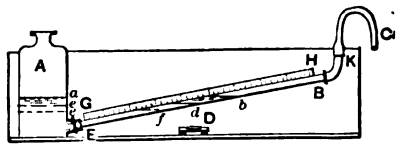

FIG 165.—DRAUGHT-GAUGE.

five times the difference of level in the bottle and tube. The scale should be graduated to show differences of level in the bottle, and thus give the pressure directly in inches of water.

Higgins's Draught-gauge.—Another form of this class of draught-gauges is shown in Fig. 166, as designed by Mr. C. P. Higgins of Philadelphia. The gauge is filled with water above the level of the horizontal tube, in such a manner as to leave a bubble of air about one-half inch long near one end of the horizontal tube when the water is level in the side tubes. The inside diameter of the vertical tubes being the same, say one-half inch, and that of the horizontal tube one eighth of an inch, a draught equivalent to one inch in water, or which will cause the water-level in the vertical tubes to vary one inch, will cause the bubble in the tube to move eight inches in the horizontal tube. In general the air-bubble moves a distance inversely proportional to the area of the tubes, and hence it can be read more accurately than in case of the ordinary draught-gauge.

FIG. 166.—HIGGINS'S DRAUGHT-GAUGE.

275. Hoadley's Draught-gauge.—This gauge was used in the trials of a warm-blast apparatus described in Vol. VI. Transactions American Society Mechanical Engineers, page 725. It consists of two glass tubes, as shown in Fig. 167, about 30 inches long, and about 0.4 inch inside diameter and 0.7 inch outside, joined at each end by means of stuffing-boxes to suitable brass tube connections, by which they are secured to a

backing of wood. The glass tubes can be put in communication with each other at top and bottom by opening a cock in each of the brass connections. Directly over each tube is a brass drum-shaped vessel 4.25 inches in diameter and with heads formed of plate-glass. These drums are connected to the tubes, and also provided with stop-cocks and nipples to which rubber tubes can be attached. Two sliding-scales are arranged along the tubes, one to measure the depression, the other the elevation, of the surface of a liquid filling the lower halves of the tubes. In the use of the instrument two liquids of different densities were used, a mixture of water and alcohol with specific gravity about 0.93 being used for the heavier liquid, and crude olive-oil with a specific gravity of 0.916 for the lighter. In using the instrument the heavier liquid was first put into the tubes, care being exercised to avoid wetting the top attachments; then the top connection between the tubes was opened and the olive-oil poured in. In using the instrument one branch was connected to the chimney, the other being opened to the air, the bottom connection opened and the top connection closed. The liquid would rise in the tube with the lighter pressure a distance inversely proportional to the respective areas of exposed surface of the tube and drum. The bottom connection was then closed, the connection to the flue removed, and the top connection opened; the surface of the olive-oil would then become level in the two tubes, that of the water remaining at different heights. It was then attached to the flue and these operations repeated, until the heavier liquid would no longer flow to the side of the lighter pressure; in that case we should have the condition of equilibrium between two liquids of different densities, Article 269, page 347, in which the lengths of columns

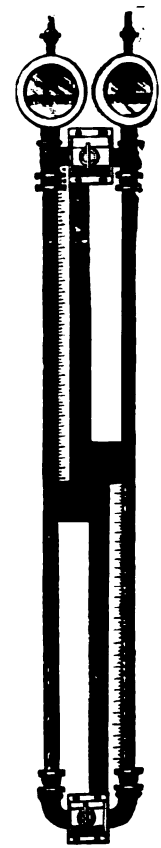

FIG. 167.—HOADLEY'S DRAUGHT GAUGE.

of the two liquids are equal. Hence, noting that p is here the greater, the difference of pressure in inches of water is

$$p - p_1 = h(d_1 - d),$$

in which d_1 and d are the respective specific gravities of the liquids used.

276. Multiplying Draught-gauges. — Fig. 168*a* shows a draught-gauge designed by Prof. Wm. Kent, the dimensions of which are marked on the figure, although they are not material for its operation. The gauge consists of a cup, B, which is partly filled with water, and an inverted cup, A, suspended above the cup B by a spring, C, with the lower and open end submerged in the water of the cup B. The tube, E, extends through the side of the cup B, with its upper end projecting above the surface of the water in the cup B, and is extended by suitable connection to the flue.

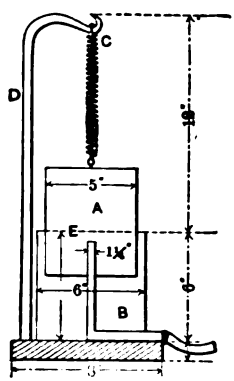

FIG. 168*a*.

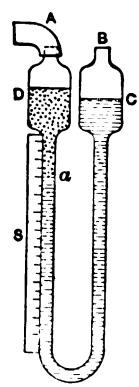

FIG. 168*b*.

By this connection the pressure in the inverted cup, A, is reduced to that in the flue where the pressure is to be measured, putting a greater load on the spring, C, which causes it to elongate. The amount of elongation will be proportional to the reduction in pressure and can be determined by the use of a suitable scale, the values of which are found by calibration. It is evident that the distance through which the cup A will move is dependent upon the area of its cross-section and the strength and length of the spring, C, and the immersion in the water.

Peclèt in his work, "Traité de la Chaleur," published in 1878, describes a similar gauge.

In Vol. XI of the Transactions of the Am. Soc. Mech. Engineers Prof. J. B. Welb describes a draught-gauge of similar principle, but in which the change in pressure is weighed on a pair of balances.

A U-shaped gauge as shown in Fig. 168*b*, in which two liquids of different density are employed, has been frequently used to measure small pressures. In the gauge shown, each arm of the U tube is enlarged near its upper end for a short distance. Supposing the liquids employed to be water and kerosene oil, water is first put into the U tube in one of the arms, as, for instance, the arm B; kerosene oil is put in the arm A, the surface of both liquids being in the enlarged parts C and D. If the side containing the lighter liquid is connected to the flue, the surface in the enlarged portion B will move in proportion to the pressure.

If a be the point of junction of the heavier and lighter liquids, this motion will be as much greater than the surface D as the area is smaller; if, for instance, the area at a be one fourth that at D, the motion will be four times as great. The motion of the surface A could be determined by calculation, but it can be much more accurately and more easily determined by a calibration, which consists of a comparison with a direct-reading draught-gauge used to measure the same pressure.

A form of pressure-gauge has been made in which the pressure has been transmitted to the measuring manometer by a piston having faces or sides of unequal areas connected. In this case the total pressure acting on each face of the piston will be in equilibrium; consequently the pressure per square inch on each face will vary inversely as the areas of the two faces of the piston. The objection to the instrument is the resistance due to friction of the piston, which can in large measure be eliminated by keeping it in rotation during its use. In place of a piston two diaphragms of unequal area with a connecting solid part have in some cases been employed for the purpose of eliminating friction.

277. Steam-gauges.—The steam-gauges in general use are of two classes, known respectively as the *Bourdon* and *Diaphragm* Gauges.

The Bourdon Gauge.—In the Bourdon gauge the pressure is exerted on the interior of a tube, oval in cross-section, bent to fit the interior of a circular case; the application of pressure tends to make the cross-section round and thus to straighten the tube. This motion communicated by means of racks and gears rotates an arbor carrying a needle or hand.

The various forms of levers used for transmitting the motion of the tube to the needle are well shown in the accompanying figures, 169 to 173. The levers are in general adjustable in length so that the rate of motion of the needle with respect to the bent tube can be increased or diminished at will. Thus in Fig. 169, and also in Fig. 170, the lever carrying the sector is slotted where it is pivoted to the frame; by loosening a set-screw the pivot can be changed in position, thus altering the ratio of motion of hand and spring in different parts of the dial.

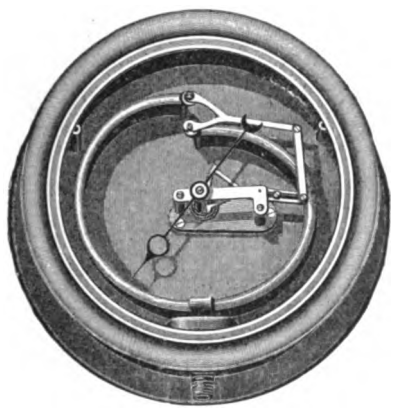

FIG. 169.—CROSBY BOURDON GAUGE.

Fig. 170 shows a gauge with a steel tube or diaphragm for use with ammoniacal vapors which attack brass.

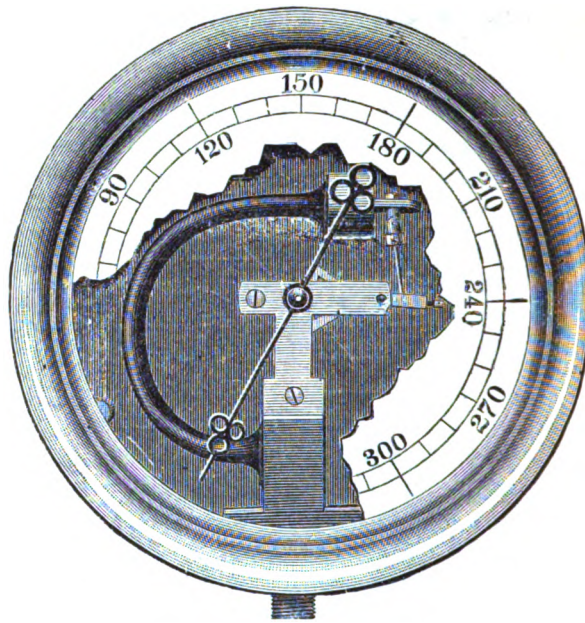

FIG. 170.—SCHAEFFER & BUDENBERG AMMONIA-GAUGE.

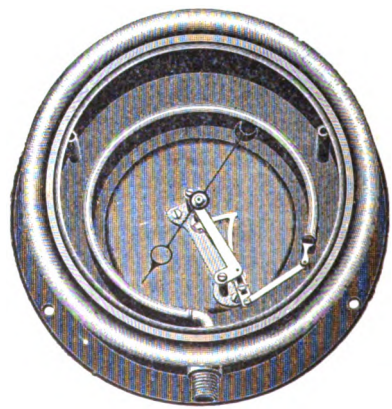

FIG. 171.—BOURDON GAUGE.

In nearly all these gauges lost motions of the parts are to some extent taken up by a light hair-spring wound around the needle-pivot.

278. The Diaphragm Pressure-gauge. — In the diaphragm-gauge the pressure is resisted by a corrugated plate, which may be placed in a horizontal plane, as in Fig. 172, or in a vertical plane, as in Fig. 173. The motion given the plate is transmitted to the hand in ways similar to those just explained.

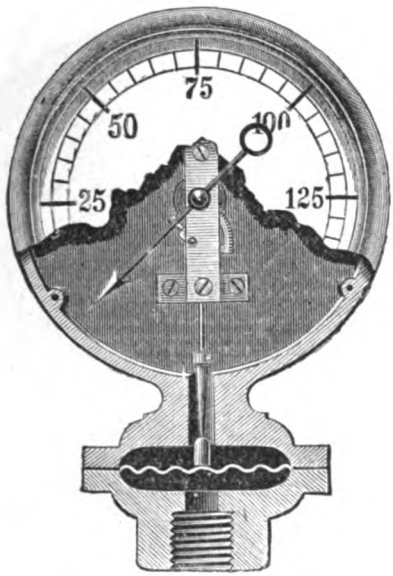

FIG. 172.—DIAPHRAGM-GAUGE.

In Fig. 172 the pressure is exerted on the corrugated diaphragm below the gauge, and the motion is transmitted to the hand by the rods and gears shown in the engraving.

The construction shown in Fig. 173, in which the diaphragm is vertical, is as follows: the lever is in two parts which are pivoted at the centre; one end is fixed to the frame, the other connected to the sector. The centre pivot is pressed outward by the action of the diaphragm, drawing the free end downward and rotating the sector, which in turn moves the needle.

In gauges of usual construction of either class, when there is no pressure on the gauge, the needle rests against a stop, which is placed somewhat in advance of the zero-mark, so that

minute pressures are not indicated by the gauge. In the use of the instrument the needle sometimes gets loose on the pivot, or turned to the wrong position with reference to the graduations; in such a case the needle is to be removed entirely, and set when the gauge is subjected to a known pressure. These

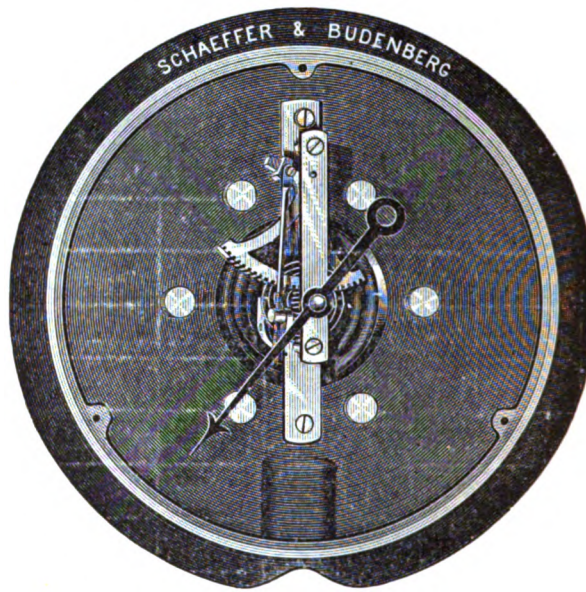

FIG. 173.—DIAPHRAGM-GAUGE.

gauges are also affected by heat. Hence, when set up for use a bent tube, termed a siphon, or a vessel which will always contain water, should be interposed between the gauge and the steam.

279. Vacuum-gauges.—Vacuum-gauges are constructed in the same method as the Bourdon or diaphragm gauges; the removal of pressure from the interior of the bent tube or diaphragm causes a motion which is utilized to move the needle. These are graduated to show pressure below that of the atmosphere corresponding to inches of mercury, zero being at atmospheric pressure, and 29.92 a perfect vacuum. The difference between the reading by such a gauge and that of the

barometer would be the absolute pressure in inches of mercury.

FIG. 174.—EDSON'S SPEED AND PRESSURE RECORDING GAUGE AND ALARM.

The principal makers of steam-gauges in this country are the Crosby Steam Gauge and Valve Co., Boston; American Steam Gauge Co., Boston; Ashcroft Steam Gauge Co., New York; Schaeffer & Budenberg, New York; Utica Gauge Co., Utica, N. Y.

280. Recording-gauges.—Recording-gauges are arranged so that the pressure moves a pencil parallel to the axis of a revolving drum which is moved at a uniform rate by clockwork. The Edson recording-gauge is shown in Fig. 174. In this gauge the steam-pressure acts on a diaphragm which oper-

ates a series of levers giving motion to a needle moving over a graduated arc showing pressure in pounds; also to a pencil-arm moving parallel to the axis of a revolving drum.

This instrument has an attachment, which is furnished when required, to record fluctuations in the speed, and consists of a pulley on a vertical axis below the instrument that is put in motion by a belt to the engine-shaft. On the small pulley-shaft are two governor-balls which change their vertical position with variation in the speed, giving a corresponding movement up or down to a pencil near the lower part of the drum. A diagram is drawn on which uniform speed would be shown by a straight line.

FIG. 175.—RECORDING PRESSURE-GAUGE.

Fig. 175 shows Schaeffer & Budenberg's recording-gauge. This consists of a pressure-gauge below the recording mechanism. The drum *B* is operated by clock-work, the piston-rod *C*, which carries the pencil, being moved by the pressure. The pencil-movement is much like that on the Richards steam-engine indicator.

Fig. 176 shows a portion of a diagram made by a recording-gauge. The drum is operated by an eight-day clock, and ar-

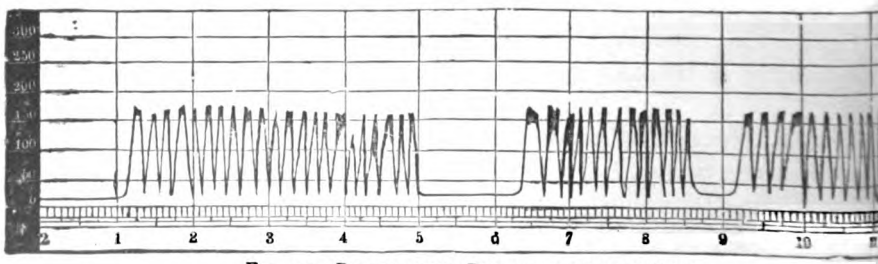

FIG. 176.—DIAGRAM FROM PRESSURE-RECORDING GAUGE.

ranged to rotate once in twenty-four hours. In the diagram the ordinates show pressure, and the abscissæ time in hours and fractions of an hour.

281. Apparatus for Testing Gauges.—Apparatus for testing gauges consists of a pump or other means of obtaining pressure, and some method of attaching the gauge to be tested, and the standard with which it is to be compared. The form of pump usually employed for producing the pressure is shown in Fig. 177. The gauge is attached at E, the standard at E_1; the hand-wheel D is run back, and water is supplied by filling the cup between the gauges and opening the cock; after the cylinder C is filled the cock below the cup is closed; if the hand-wheel D is turned, an equal pressure will be put on the standard and on the gauge.

The standards used for testing may be manometers or calibrated gauges, or apparatus for lifting known weights by the pressure acting on a known area. Of these various standards, the mercury column, as described in Article 271, page 349, is to be given the preference, since the only errors of any practical importance are those due to graduation. The readings given by the mercury column are on a larger scale than those given by any other instrument, and no corrections for friction are required. The other standards, of which the short mercury columns have been described (see Article 264), will be found to give excellent results in practice, since the graduations on the gauges to be tested are usually so close together that the friction of the moving parts of the apparatus is inappreciable.

Apparatus for Testing Gauges with Standard Weights.

There are two forms of this apparatus on the market, in one of which the pressure is received on a round piston, and in the other on a surface exactly one square inch in area. The friction in both cases is practically inappreciable; the errors in areas can be determined by comparison with a standard mercury column.

The Crosby Steam-gauge Testing Apparatus.—This is shown in Fig. 178, from which it is seen to consist of a small cylinder

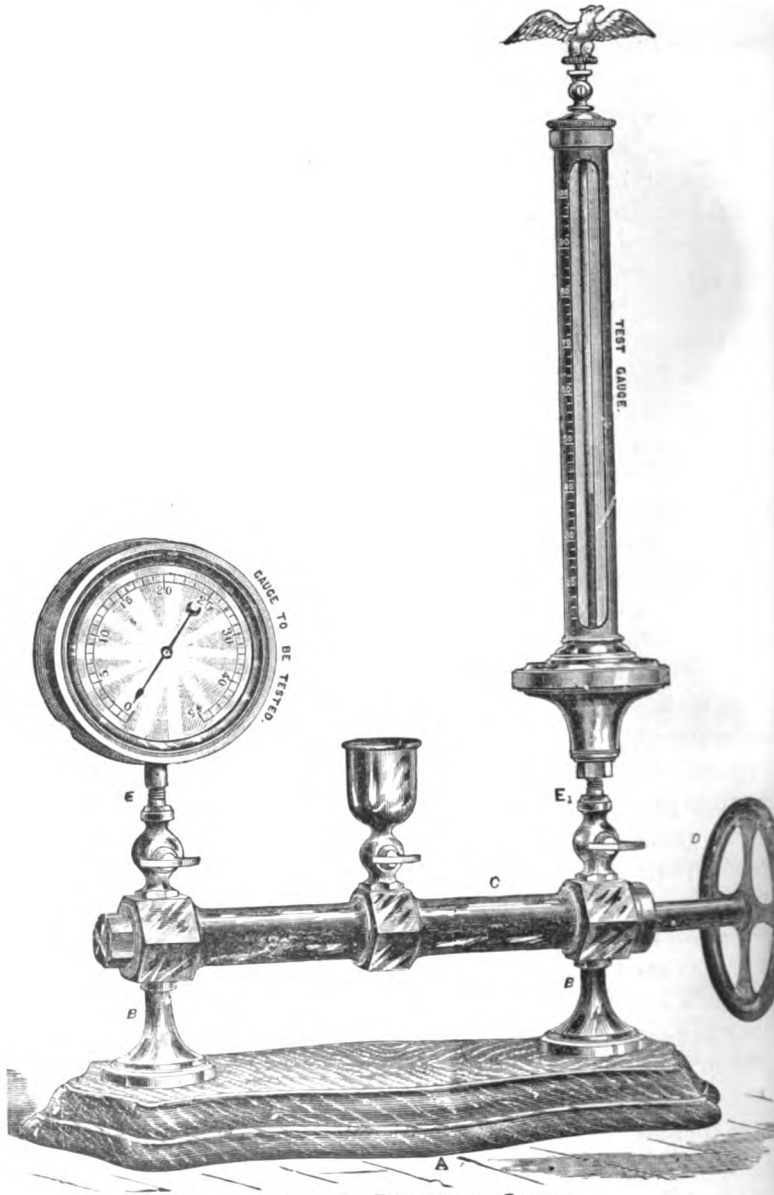

FIG. 177.—TEST-PUMP FOR GAUGES.

in which works a nicely fitted piston; this cylinder connects with a U-shaped tube ending in a pipe tapped and fitted for

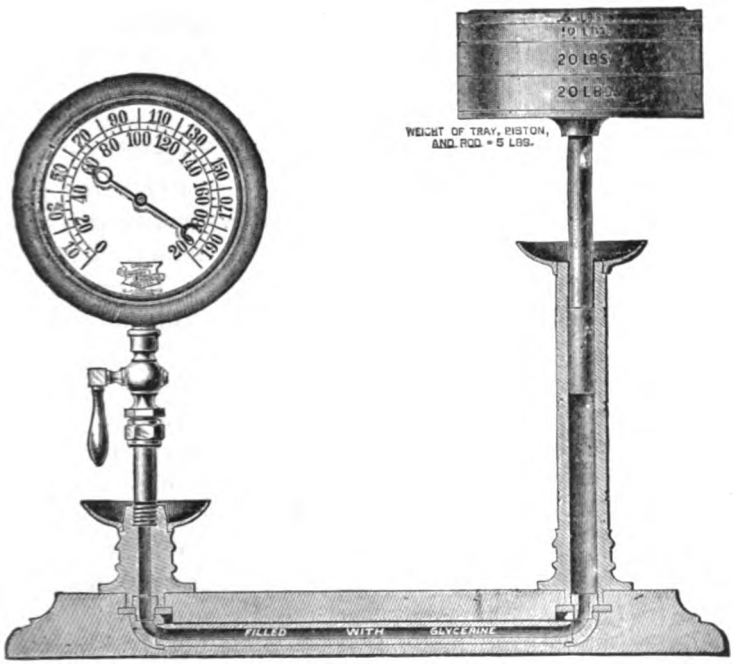

FIG. 178.—CROSBY STEAM-GAUGE TESTING APPARATUS.

attaching a gauge. The tube is filled with glycerine, in which case a known weight added to the piston produces an equal pressure on the gauge, less the friction of the piston in the tube. This is almost entirely overcome by giving the weight and piston a slight rotary motion.

The Square-inch Gauge.—This apparatus consists of a tube the end of which has an area of one square inch enclosed with sharp edges. This is connected to the test-pumps in place of the standard (see Fig. 177, page 364); a given weight is suspended from the centre of a smooth plate which rests on the square inch orifice. The gauge to be tested is connected at *E*, and the pressure applied until the plate is lifted and water escapes from the orifice.

282. Calibration and Correction of Pressure-gauges.—The correctness of gauges is determined in each case by comparison with apparatus known to be correct, the apparatus being subject to a fluid pressure of the same intensity. The calibration may be done by comparison with any of the standards described.

Calibration of Gauges with the Mercury Column.

First, with Steam-pressure.—In this case attach the gauge with a siphon connection to a steam-drum, making the center of the gauge the height of the zero of the column. This drum is to be connected at one end to the mercury column, and the steam-pressure is to be applied to it so that it can be regulated by throttling the admission or discharge. Admit steam-pressure to the gauge and the mercury column; adjust the pressure to a given reading by throttling the valves. Starting at five pounds of pressure on the gauge, note the corresponding reading of the mercury column, temperature of the mercury and of the room. Increase the pressure and take readings once in five pounds. In no instance allow the pressure to exceed that at the time of making the reading. In case the pressure is made too great at any time, run it some distance below the required amount and make a new trial, it being necessary to keep the mercury column and gauge hand moving continually upward or downward. Repeat the same operation in the reverse direction, commencing with the highest pressures; the average reading of the mercury column, corrected for error as explained in Article 272, page 350, and reduced to pounds of pressure, is the correct pressure with which the gauge-reading is to be compared.

Second, with Water-pressure.—In this case a hand force-pump (see Article 281) must be used after the limits of pressure of the water-main have been reached. Proceed as follows:

Run out the piston of the pump attached to the mercury column to the end of its travel; close drip-cock and open the connecting-valve. Attach the gauge to be tested with its centre opposite the zero of the column. Open the cock

Draw water from the mains until the gauge indicates 5 lbs. pressure. Shut off the water and adjust the pressure exactly at 5 lbs. by using the displacer. Note the height of the mercury in the tube. Increase the pressure to 10 lbs. and take readings. Carry the pressure as far as desired by increments of 5 lbs. Use the pump alone when water-pressure fails. From the maximum pressure attained descend by increments of 5 lbs., taking readings as before. Tabulate data and plot a curve, using gauge-readings as ordinates and actual pressures as abscissæ. By inspection of the curve determine the fault in the gauge and give directions for correcting it.

In these tests it may not be possible to set the centre of the gauge as low as the zero of the column. In that case the reading on the mercury column should be greater than that at the centre of the gauge by a pressure due to the length of a column of water equal to the elevation of the centre of the gauge above the zero of the mercury column. This is a constant amount; it should be obtained and the readings of the column corrected accordingly.

The method of *calibrating gauges with other standards* is to be essentially the same, except as to the manipulation of the apparatus. Further directions do not seem necessary.

Correction of Gauges.—If an error appears as a result of calibration, it may generally be corrected; if the error is a constant one, the hand may be removed with a needle-lifter, and moved an amount corresponding to the error, or in some gauges the dial may be rotated. If the error is a gradually increasing or diminishing one, it can be corrected by changing the length of the lever-arm between the spring and the gearing by means of adjustable sleeves or the equivalent. It is to be noted that the pin to stop the motion of the hand is not placed at zero, but in high-pressure gauges is usually set at three to five pounds pressure.

FIG. 179. U-SHAPED MANOMETER.

283. Calibration of Vacuum-gauges.—This is best done by a comparison with a U-shaped mercury manometer, as shown

in Fig. 179, of which each branch of the tube should exceed 30 inches in length. Before calibrating, the manometer is filled with mercury to one half the length of the tubes, and is attached near the gauge to be tested to the receiver of an air-pump. In case a condensing engine is used, both the gauge and the standard may be connected to the condenser. A comparison of the readings of the vacuum-gauge with the difference of level of mercury in the two tubes will determine the error of the gauge.

284. Forms for Calibration of Gauges.

CALIBRATION OF STEAM-GAUGE BY COMPARISON WITH THE MERCURY COLUMN.

Maker and No. of Gauge.....

Date..... 189 . Observers, { .... }

No.	Gauge. lbs.	Mercury Column.				Gauge. lbs.	Error. lbs.
		Inches.			Pounds.		
		Up.	Down.	Mean.			

Temperature of Room .... deg. Fahr.

Centre of Gauge above o of column .. ft.

Correction to column reading .... lbs.

CALIBRATION OF STEAM-GAUGE BY COMPARISON WITH THE SQUARE-INCH GAUGE, OR WITH CROSBY'S GAUGE-TESTING APPARATUS.

Maker and No. of Gauge .....

Date.....189 . Observers, { .... }

No.	Load in lbs. on Valve.	Gauge.	Error.	Remarks.

CHAPTER XII.

MEASUREMENT OF TEMPERATURE.

285. Mercurial Thermometers.—Measurements of temperature are determined by the expansion of some thermometric substance, mercury, alcohol, or air being commonly employed.

The *mercurial thermometer* is commonly used; this consists of a bulb of thin glass connected with a capillary glass tube; on the best thermometers the graduations are cut on the tube, and an enamelled strip is placed back of them to facilitate the reading. When the mercury is inserted, every trace of air must be removed in order to insure perfect working. There are certain defects in mercurial thermometers due to permanent change of volume of the glass bulb, with use and time, that results in a change of the zero-point. This defect is so serious as to render the mercurial thermometer useless for very minute subdivisions of a degree. In a good thermometer the bore of the tube must be perfectly uniform, which fact can be tested by separating a thread of mercury and sliding it from point to point along the tube, and noting by careful measurement whether the thread is of the same length in all portions of the tube: if the readings are the same, the bore is uniform or graduated by trial. In most thermometers the graduations are made with a dividing engine; in some thermometers the principal graduations are obtained by the thread of mercury, as described; in the latter case change in diameter of bore would be compensated. To determine the accuracy of temperature

measurements thermometers used should be frequently tested for freezing-point and boiling-point. The accuracy of intermediate points should be determined by comparison with a standard mercurial or air thermometer.

The *mercurial-weight* thermometer which was employed by Regnault, but is now very little used, consists of a glass vessel with a large bulb and capillary tube, open at the top; it is filled with mercury when at the temperature of the freezing-point; it is then heated to the temperature of boiling water, and the amount of mercury that runs out is carefully weighed, and determines the value of the thermometric scale. The temperature of any enclosure is then found by placing in it the thermometer, previously filled when at freezing-point and weighing the amount that escapes; from this the temperature can be calculated by simple proportion.

The expansion of mercury is not perfectly uniform for all temperatures, so that mercurial thermometers are never perfect for extreme ranges of temperature.

286. Rules for the Care of Mercurial Thermometers.—The following rules for handling and using mercurial thermometers, if carefully observed, will reduce accidents to a minimum:

1. Keep the thermometer in its case when not in use.

2. Avoid all jars; exercise especial care in placing in thermometer-cups.

3. Do not expose the thermometer to steam heat unless the graduations extend to or beyond 350° F.

4. In measuring heat given off by working-apparatus, or in continuous calorimeters, do not put the thermometers in place until the apparatus is started, and take them out before it is stopped. *Be especially careful that no thermometer is overheated.*

5. In general do not use thermometers in apparatus not fully understood or which is not in good working condition.

6. Never carry a thermometer wrong end up.

7. See that the thermometer-cups are filled with cylinder-oil or mercury. If cylinder-oil is used, keep water out of the cups or an explosion will follow.

8. After a thermometer is placed in a cup, keep it from contact with the metal by the use of waste.

287. Alcohol-thermometers.—Other liquids, as alcohol or spirits of wine, are better suited for low temperatures than mercury, but on account of the tension of their vapors are not suited for high temperatures, and are probably subject to the same objections in a less degree as mercurial thermometers.

288. Air-thermometers.—Air-thermometers, in which either air or hydrogen may be used, are not open to the objections which hold with the mercurial thermometer, as the expansion for uniform increments of heat is under all conditions the same.

There are two plans of these thermometers:

I. Increase of volume of air at constant presssure.

II. Increase of pressure at constant volume.

The latter plan was found to give better results by Regnault, and constitutes the principle of the "Normal Air-thermometer."

The air-thermometer in construction is a U-shaped tube, one branch enlarged into a bulb for the air, the other open for the mercury. Adjacent to the tube for the mercury is a graduated scale which can be read by a vernier to small divisions of an inch; a single mark is placed in the air branch, at a distance of eight or ten inches from its top. This mark serves to define the limit of volume used.

There are various forms of instrument in use; the one adopted at Sibley College was designed by Mr. G. B. Preston and is shown in Fig. 180. The air-bulb, *C*, is approximately $1\frac{1}{8}$ inches by 6 inches; the bulb is joined by a capillary tube, *F*, straight or bent into any convenient form as may be required. In order that the bulb may be conveniently located for heating, this capillary tube is joined to a tube of glass about $\frac{1}{16}$ inch bore, the end of which is bent at right angles ground true, and joined by a short piece of rubber tubing to a glass tee at *B*. The tee has a branch provided with a cock, and connection for rubber tubing. The opposite side of this tee is joined in a similar way to a tube, *BE*, of the same bore, which is given a length sufficient to measure the required temperatures. A mark

a is made on the glass near *F*, at the junction of the capillary tube with the larger one for the mercury, and serves to determine the limit of volume of air used. The bottle, *A*, is filled with mercury, and connected by a rubber tube to the cock *B*. By opening the cock and elevating the bottle, mercury will

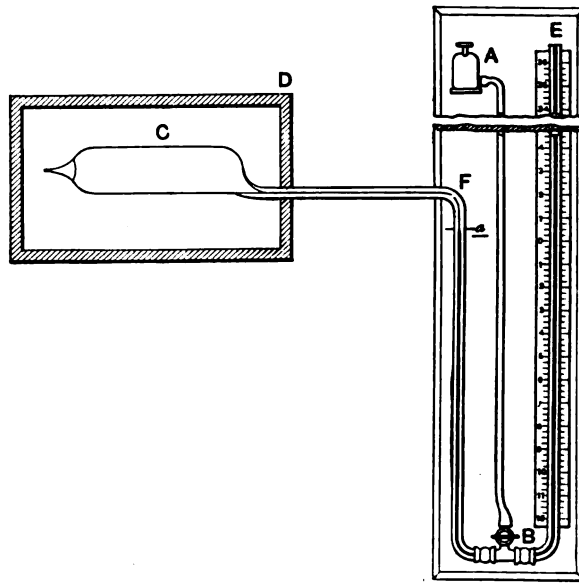

FIG. 180.—PRESTON AIR-THERMOMETER.

pass into the tubes: when it reaches the height of the mark *a*, the connecting cock *B* is closed, and the amount that the column *BE* extends above the level of this mark, or fails of reaching this level, is read on the scale.

Hoadley Air-thermometer.—The Hoadley air-thermometer, as described in the Transactions of the American Society of Mechanical Engineers, Vol. VI., page 282, is shown in Fig. 181. with all the dimensions marked. It differs from the preceding one in having no means provided for introducing or removing mercury to maintain the volume of air constant. The tube connected to the air-bulb, instead of being capillary, is about $\frac{1}{16}$ inch diameter. The instrument consists of a U-tube about

$\frac{3}{8}$ inch external diameter, $\frac{1}{16}$ bore, having a short leg about 39 inches long, and the other leg longer by 12 inches or more, the latter surmounted by a bulb blown out of the tube $1\frac{5}{8}$ inches in diameter, $6\frac{3}{8}$ inches in extreme length. The branches of the U-tube are 2 inches apart and vertical; these are separate tubes, each one bent to a right angle by a curve of short radius, ground square and true at the ends and united by a short coupling of rubber tubing, *ea*, firmly bound on each branch with wire. After it is filled with dry air according to the directions in Article 290, page 376, it is fastened on a piece of board by annealed wire staples, and paper scales affixed as shown in the figure. The difference in height of the two columns of mercury is taken as the reading of the thermometer, and no correction is made for slight variations in the volume of air, as shown by variation in the position of the height of the mercury column in the branch *BC*. The error caused in this way is very small and amounts to only 0.0030 inch per inch of height. This is equivalent to an error of about five degrees in a range of temperature of 600 degrees F.

The Jolly Air-thermometer.—An exceedingly simple form of the air-thermometer, and one also very accurate, consists of the air-bulb *C*, and a capillary stem attached to three or four feet of rubber tubing, which replaces the U-tube in Fig. 180; in the other end of the rubber tubing is inserted a piece of glass tube 8 to 12 inches long and about $\frac{1}{16}$ inch bore; on this glass tube, and also on the capillary tube, is etched a single mark; the rubber tube is filled with mercury, which extends up the glass tube on the other branch. A fixed scale, similar to *DE*

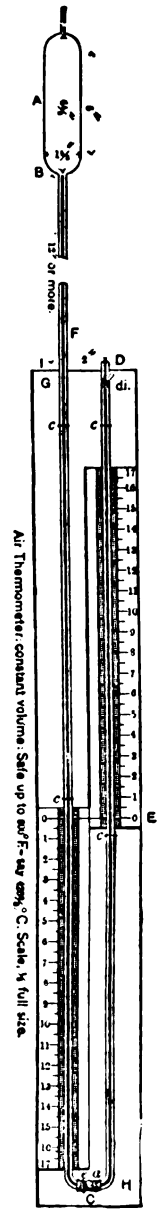

FIG. 181.—THE HOADLEY AIR-THERMOMETER.

in Fig. 181, is located near the instrument. To use the instrument the tube is manipulated until the air is brought to its limit of volume, then the other end of the tube is held opposite the scale, and the reading corresponding to the height of the mercury is taken. This is repeated for several temperatures, and, if the constant of the instrument is known, gives the data for computing the temperature.

289. Formulæ for the Air-thermometer of Constant Volume.—The pressure exerted by the confined air, added to the weight of mercury, in the branch BF, Fig. 180, will equal the weight of mercury in the other branch plus the weight of the atmosphere. Thus let p equal the pressure expressed in inches of mercury of the confined air, v its volume, m the height of the mercury in the branch of the tube on the side of the air-bulb, m' the height in the other branch, b the pressure of the atmosphere expressed in inches of mercury, T the absolute temperature, t the thermometer-reading, h the height of mercury in the tube BE above the mark a, no mercury being above the point a in the tube BF. Let α equal constant ratio of T to pv. Then we have, since the pressures in both branches of the tube are equal,

$$p + m = m' + b; \quad . \quad . \quad . \quad . \quad . \quad . \quad . \quad (1)$$

$$p = m' - m + b.$$

Since $m' - m = h$, ... (2)

$$p = h + b. \quad . \quad . \quad . \quad . \quad . \quad . \quad . \quad . \quad (3)$$

From physics,

$$\frac{pv}{T} = \text{constant}; \quad . \quad . \quad . \quad . \quad . \quad . \quad . \quad (4)$$

and if v be made constant, p will vary as T; also

$$T = 460 + t; \quad . \quad . \quad . \quad . \quad . \quad . \quad . \quad (5)$$

$$p = T(\text{constant}) = (460 + t)\alpha; \quad . \quad . \quad . \quad . \quad (6)$$

hence

$$(460 + t)\alpha = b + h. \quad . \quad . \quad . \quad . \quad . \quad . \quad (7)$$

Let the same symbols with primes denote other values of the corresponding quantities. Then

$$(460 + t')\alpha = b' + h'. \quad . \quad . \quad . \quad . \quad . \quad . \quad (8)$$

By comparing equations (7) and (8),

$$\frac{460 + t}{460 + t'} = \frac{b + h}{b' + h'}. \quad . \quad . \quad . \quad . \quad . \quad . \quad (9)$$

From which, by solving,

$$t' = \left[\frac{b' + h'}{b + h}(460 + t)\right] - 460. \quad . \quad . \quad . \quad (10)$$

To apply the formula, take readings of the instrument at 32° F., or some known temperature, and ascertain the constants of the instrument. Thus suppose the air-bulb to be packed in ice and the temperature reduced to 32° F. In this case $t = 32°$; b and h are to be observed and recorded.

If $t = 32°$ in equation (10),

$$t' = \frac{492}{b+h}(b'+h') - 460; \quad . \quad . \quad . \quad . \quad . \quad (11)$$

which is an equation to determine any temperature. If b and h are constant, $492 \div (b + h)$ is constant and equals K.

$$t = K(b'+h') - 460; \quad . \quad . \quad . \quad . \quad . \quad . \quad (12)$$

which is the practical equation for use in determining temperatures.

If the height of the mercury in the column EB, Fig. 180, is less than that in FB, h will be negative, and is to be so considered in the preceding formulæ.

In the use of the air-thermometer the mercury must be maintained constantly at the point a in the branch FB; this will require the addition of mercury to the U-tube as the pressure increases, which is readily done by raising the bottle A and opening the connecting-cock B. By a reverse process mercury may be removed as the pressure decreases.

290. Construction of the Air-thermometer.—The bulb of the air-thermometer must be filled with perfectly dry air, as any vapor of water will vitiate the results.

To accomplish this, the bulb is provided with a small opening opposite the capillary tube, which is fused after the dry air is introduced. To effect the introduction of dry air, all the mercury is drawn into the bottle A, Fig. 180; the end of the tube E is connected to a U-tube about 6 inches long in its branches and about $\frac{3}{4}$ inch internal diameter, filled with dry lumps of chloride of calcium and surrounded by crushed ice; the opening in the end of the air-chamber is connected by a rubber tube to an aspirator (a small injector supplied with water would act well as an aspirator), and air is drawn through

for three or four hours: at the end of this time the bulb and tube should be filled with dry air. While the current of air is still flowing, the cock *B* is opened and mercury allowed to pass into the tubes until it rises to the point *a* in the tube *BF*; the opening in the air-chamber is then hermetically sealed with a blow-pipe, and the connections to the chloride-of-calcium tube removed. This operation fills the bulb with air at atmospheric pressure. By closing the cock *B* before the mercury has risen to the point *a* the pressure will be increased; by closing it after it has passed the point *a* it will be diminished. Packing the bulb *C* in ice, or heating it, will also increase or diminish the pressure as required.

291. Corrections to Determinations by the Air-thermometer.—The corrections to the air-thermometer are all very small, and affect the results but little if considered. They are:

1. Capillarity, or adhesion of the mercury to the glass. In general the mercury in the two tubes *BF* and *BE* (Fig. 180) is moving in opposite directions, and the effect of adhesion is neutralized. For error in other cases see table on page 351.

2. Expansion of the glass. This is a small amount, and may usually be neglected. The coefficient of surface expansion of glass is 0.00001 per degree F.; it is entirely neutralized if the column of mercury is not reduced in area at the point of meeting the air from the bulb.

3. Expansion of the mercury should in every case be taken into account by reducing all observations to 32° F., the coefficient of expansion being 0.0001 per degree F. Reduce all observations before applying formulæ.

4. Errors in the fixed scale should be determined and observations reduced before applying formulæ.

292. Practical Uses of the Air-thermometer.—The air-thermometer may be used as a standard with which to compare mercurial thermometers; in this case the bulb of the air-thermometer is surrounded with a non-conducting chamber (Fig. 180), in which the thermometer to be compared is inserted. For low temperatures water may be circulated through this chamber, and simultaneous readings taken; for higher tem-

peratures steam may be used. Time must in each case be given to permit the fluid in the air-thermometer to arrive at the true temperature.

In comparison with mercurial thermometers, an exact agreement may be found at freezing and boiling points; but at other places a slight disagreement may be expected, which will increase rapidly for high temperatures.

The *air-thermometer* may also be used to measure *temperatures directly*. When the bulb is connected with a long capillary stem it may be introduced into flues, and temperatures below the melting-point of glass measured. The melting point will vary from 600 to 800 degrees F. By using porcelain bulbs extremely high temperatures can be measured.

293. Directions for Use of the Air-thermometer.

First. To obtain the Constants of the Instruments.—Enclose the air-bulb with crushed ice, arranged so that the water will drain off. Note the reading of the mercury column of the air-thermometer h and of the barometer b; by means of the attached thermometers reduce these readings for a temperature of the mercury corresponding to 32° F. Correct for errors of graduation. Divide 492 by the sum of these corrected readings for the constant of the air-thermometer. Call this constant K.

Second. To Measure any Temperature t'.—Note the corresponding reading of the mercury column h', and that of a barometer b' in the same room. The reading of the mercury column plus that of the barometer will correspond to $b' + h'$ in the formula

$$t' = \frac{492}{b+h}(b' + h') - 460 = K(b' + h') - 460.$$

Third. To Compare a Mercurial Thermometer.—Make simultaneous readings of the thermometer when hanging in the chamber with the air-bulb, and the height of the mercury column. Perform reduction, and plot a calibration curve for each 10° of graduation.

Fourth. For general use of the air-thermometer, arrange

the bulb so that it can be inserted into the medium whose temperature is to be measured, with the U-shaped tubes in an accessible position for reading. Obtain the temperature as explained above (see *Second*).

294. Form for Reducing Air-thermometer Determinations.

TEMPERATURE DETERMINATIONS WITH AIR-THERMOMETER.

By..... 189....

DETERMINATION OF CONSTANT.

	Symbol.	I.	II.	III.	IV.
Temperature of air-bulb.....	.....	.....	.....	.....	.....
Barometer—Reading	.....	.....	.....	.....	.....
Thermometer.....	.....	.....	.....	.....	.....
Reduced to 32°	b	.....	.....	.....	.....
Air-thermometer—Reading.....	.....	.....	.....	.....	.....
Thermometer.	.....	.....	.....	.....	.....
Reduced to 32°.	h	.....	.....	.....	.....
Constant = 492 + (b + h).....	K	.....	.....	.....	.....
.....	.....	.....	.....	.....	.....

DETERMINATION OF TEMPERATURE.

$t' = K(b' + h') - 460.$

No.	Barometer.			Air-thermometer.			$b' + h'$ Sum.	t' Temperature.	Mercury Thermometer.	
	Reading.	Ther.	b' reduced.	Reading.	Ther.	h' reduced.			Reading.	Error.
1	.....	.....	.....	.....	.....	.....	.....	.....	.....	.....
2	.....	.....	.....	.....	.....	.....	.....	.....	.....	.....
3	.....	.....	.....	.....	.....	.....	.....	.....	.....	.....
4	.....	.....	.....	.....	.....	.....	.....	.....	.....	.....
5	.....	.....	.....	.....	.....	.....	.....	.....	.....	.....
6	.....	.....	.....	.....	.....	.....	.....	.....	.....	.....
7	.....	.....	.....	.....	.....	.....	.....	.....	.....	.....
8	.....	.....	.....	.....	.....	.....	.....	.....	.....	.....
9	.....	.....	.....	.....	.....	.....	.....	.....	.....	.....
10	.....	.....	.....	.....	.....	.....	.....	.....	.....	.....
11	.....	.....	.....	.....	.....	.....	.....	.....	.....	.....
12	.....	.....	.....	.....	.....	.....	.....	.....	.....	.....

295. Determination of Boiling and Freezing Points. *First. To test for Boiling-point.*—Suspend the thermometer so that it will be entirely surrounded in the vapor of boiling water at atmospheric pressure but will not be in contact with the water. Note the reading. From the barometer-reading calculate the boiling-point for the same time. The difference will be the error in position of the boiling-point.

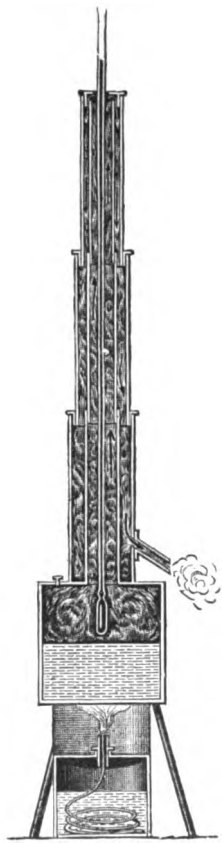

FIG. 182.—APPARATUS TO TEST BOILING-POINT.

The engraving (Fig. 182) shows an instrument for determining the boiling-point. The bulb of the thermometer is exposed to steam at atmospheric pressure, which passes up to the top of the instrument around the tube, and down on the outside, discharging into the air, or it may be returned directly to the cup, thus obviating the need of supplying water. In the form shown, the parts telescope into each other for convenience in carrying, which is entirely unnecessary for laboratory uses.

Secondly. To test for Freezing-point.—Surround the bulb of the thermometer by a mixture of water and ice, or water and snow; drain off most of the water. The difference between the reading obtained and the zero as marked on the thermometer (32° for Fahr. scale) is the error in location of freezing-point.

296. Metallic Pyrometers are instruments used for measuring high temperatures. The ordinary instruments sold under this name are made of two metals which have different rates of expansion, copper and iron generally being used. The difference in the rate of expansion is employed by means of levers and gears to rotate a needle over a dial graduated to degrees.

In using the metallic pyrometer no reading should be taken until it has had sufficient time to arrive at the temperature of

the medium in which it is enclosed; when one tube alone is heated, the needle may be stationary on the dial, or even have a retrograde motion.

The *metallic pyrometer* is usually calibrated by immersing in a pipe filled with steam under pressure and comparing the temperature with that given by a calibrated mercurial thermometer. The scale so obtained is assumed to be uniform throughout the range of the pyrometer and beyond the limits of the calibration. Comparison might be made with an air-thermometer. The extreme range of such pyrometers is about 1200° Fahr., but they are probably of little value for temperatures exceeding 1000° Fahr.

Wedgewood's Pyrometer is based on the permanent contraction of clay cylinders due to heating. This contraction is determined by measurement in a metal groove with plane sides inclined towards each other. This pyrometer does not give uniform results.

297. Air-pyrometer.—The air-thermometer with a bulb of porcelain, or platinum or other refractory material, affords an accurate method of measuring high temperatures.

Mr. Hoadley* states that the ordinary air-thermometer made of hard glass can be used to determine temperatures of 800° Fahr. With porcelain bulb it has been used to measure temperatures of 1900° Fahr.

298. Calorimetric Pyrometers.—Pyrometers of this class determine the temperature by heating a metal or other refractory substance to the heat of the medium whose temperature is to be measured. Suddenly dropping the heated body into a large mass of water, the heat given off by the body is equal to that gained by the water; from this operation and the known specific heat of the substance the temperature is computed. Thus, let K equal the specific heat of the body, M its weight; let W equal the weight of water, t its temperature before, and t' after, the body has been immersed; let T equal the temperature of the heated body, t' its final temperature. Then

$$KM(T - t') = W(t' - t).$$

* See Vol. VI., Transactions American Society Mechanical Engineers.

From which

$$T = \frac{W}{MK}(t' - t) + t'.$$

In connection with pyrometrical work, the specific heat of the substance used often has to be determined.

299. Determination of Specific Heat.—The specific heat of a body is determined by heating it to a known temperature: for instance, after heating it in steam of atmospheric pressure until it has attained a known temperature T, its weight M having been accurately determined, it is dropped suddenly without loss of heat into a vessel containing W pounds of water at a temperature of 60° Fahr. Let K be the specific heat of the body, and t' the resulting temperature. The vessel must be so made that there is no loss of heat, and that the water can be thoroughly agitated so that an accurate measure of the temperature t' can be taken; also the effect of the vessel in cooling the body must be determined and considered a part of the weight W. Then will the loss of heat of the body be equal to that gained by the water.

$$K(T - t')M = W(t' - 60°).$$

From which

$$K = \frac{W(t' - 60°)}{M(T - t')}.$$

The specific heat of most bodies is not quite constant but is found to increase with higher temperatures.

300. Values of Specific Heat and Melting-point.—The metals required for pyrometrical purposes are those with a high melting-point and a uniform and known specific heat. The obvious losses of heat in (1) conveying the heated body to the calorimeter, and (2) radiation of heat from the calorimeter, may be considerable, and should be ascertained by radiation tests and the proper correction made. Nearly all metals are oxydized, or acted on by the furnace-gases, long before the melting-point is reached; so that, in general, whatever metal is used, it must be protected by a fire-clay or graphite crucible. Platinum, copper and iron are usually employed. The following table gives determinations of melting-points and specific heats:

TABLE OF MELTING-POINTS AND SPECIFIC HEATS OF METALS.

Metal.	Melting-point.		Specific Heat. Low Temperatures.
	Degrees Fahr.	Degrees Centigrade.	
Platinum.....	....	2000	0.034
Steel.....	....	....	0.118
Wrought-iron. ...	2900	....	0.110
Cast-iron.....	3400	....	0.14
Copper.....	2550	....	0.94
Porcelain....	....	....	0.170
Brass.....	1870	....	0.094
Zinc..	700	415	0.093
Lead.....	630	325	0.030
Bismuth	493	264	0.030
Tin.....	426	228	0.047
Mercury	— 38	....	0.030
Sulphur.....	239	....	0.200
Antimony	....	425	....

The mean specific heat of *Platinum** has been the subject of careful investigation. It was found to vary from 0.03350 at 100° C. to 0 0377 at 1100° C. by Poullet, the experiment being made with a platinum reservoir air-thermometer.

The following were the determinations:

Platinum.		Copper.	
Range of Temperature. Degree Centigrade.	Mean Specific Heat.	Range of Temperature. Degree Centigrade.	Mean Specific Heat.
0 to 100	0.03350	15 to 100	0.09331
0 " 200	.03392	16 " 172	0.09483
0 " 300	.03434	17 " 247	0.09680
0 " 400	.03476		
0 " 500	.03518		
0 " 600	.03560		
0 " 700	.03602		
0 " 800	.03644		
0 " 900	.03686		
0 " 1000	.03728		
0 " 1100	.03770		

* See Encyclopædia Britannica, art. Pyrometer.

For *wrought-iron* the true specific heat at a temperature t on the Centigrade scale is given as follows by Weinbold:

$$C_t = 0.105907 + 0.00006538t + 0.000000066477t^2.$$

Porcelain or *Fire-clay* having a specific heat from 0.17 to 0.2, although not a metal, is well adapted for pyrometrical purposes.

301. Hoadley Calorimetric Pyrometer.—The Hoadley pyrometer is described in Vol. VI., p. 712, Transactions of the American Society of Mechanical Engineers. It consisted of a vessel, Fig. 183, made of several concentric vessels of copper, with water in the inner one, eider-down in the intermediate spaces, and a cover of the same nature. Also a sub-

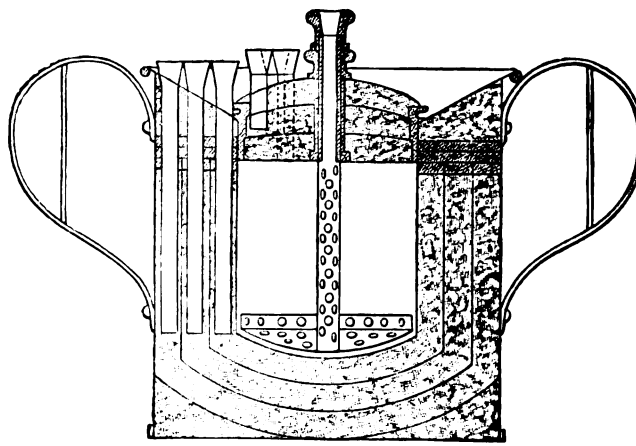

FIG. 183.—HOADLEY PYROMETER.

stance to be heated consisting of balls of platinum, or wrought-iron and copper covered with platinum. These balls were heated in a crucible, conveyed to the calorimeter and suddenly dropped in. The calorimeter was provided with an agitator made of hard rubber, with a hole in the centre for a thermometer. The balls used as heat-carriers weighed about three quarters of a pound each; the vessel held about twelve pounds of water. This apparatus is now at Cornell University.

The balls were heated in crucibles and conveyed to the calorimeter in a fire-clay jar as shown in Fig. 142. The cover

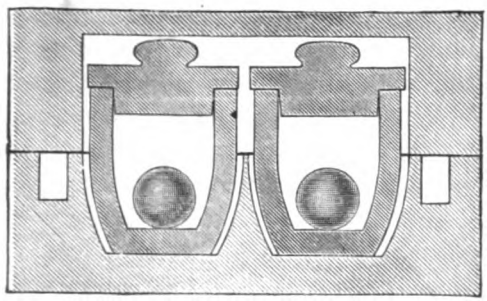

FIG. 183.—PLATINUM BALLS AND CRUCIBLE.

of this jar was quickly removed and the balls dropped into the water in the calorimeter.

302. Thermo-Couple Thermometers. — In thermometers or pyrometers of this kind the temperature is determined by the measurement of the electro-motive force excited by differences of temperature in a metallic circuit composed of two different metals. The point of union of the metals is termed a junction. When there are several junctions in series the device is called a thermopile.

This thermometer was first proposed by Becquerel in 1826, first applied practically by Pouillet in 1836, it was considered unreliable by Regnault, but was much improved by Edw. Becquerel in 1863, who introduced the platinum palladin couples and it was finally made a practical commercial instrument by Le Chatelier. Le Chatelier introduced a platinum and platinum-rhodium couple which gives extremely reliable results through a range of temperatures from 300° C., to 1500° C.

The materials best adapted for couples depend upon the requirements as to temperature and other conditions. The metals should be pure or at least homogeneous, since electro-motive force is set up by a change of structure. The couples need to be protected from corroding gases for reliable results. For high temperatures a couple made of pure platinum and a

homogeneous alloy of platinum and 10 per cent of rhodium probably gives the best results. For temperatures under 600° C., excellent results are obtained with a couple made of pure platinum and constantin. For rough work not exceeding 300° C., where the instrument can be frequently calibrated, good results can be obtained with a couple of German silver and iron. The metals at the junction points should be united by fusing, so as to reduce the electrical resistance as much as possible.

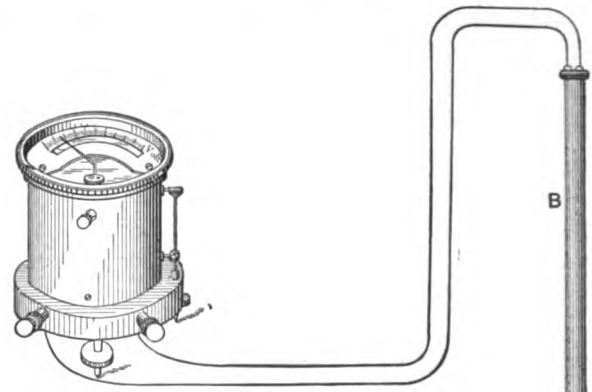

LE CHATELIER'S ELECTRICAL PYROMETER.

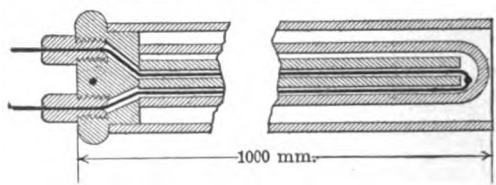

ELEMENT OF LE CHATELIER'S PYROMETER.

In the use of the thermometer the cold junction should be kept at a known temperature, if convenient in melting ice. For the measurement of high temperatures the hot junction must be protected by inserting on the inside of a porcelain tube glazed only on the outside. The electro-motive force generated is read by a galvanometer or some equivalent apparatus. The attached figure shows the construction of the hot junction of the Le Chatelier pyrometer, also the entire apparatus consisting of a galvanometer, connecting wires, which may be of

any length, and the thermo-couple inserted in the porcelain tube *B*. Prof. W. H. Bristol has recently designed and put on the market a thermometer of this type which is fully described in Vol. 25 of the Transactions of the Am. Soc. Mech. Engineers. In Bristol's thermometer platinum rhodium is used for the hot element and cheaper metals for the remaining portion. A direct reading special milli-voltmeter of the Weston type is used to measure the electro-motive force and its equivalent temperature. The instrument is considered accurate to 2000° F. It is provided with a recording devise when desired, and an automatic compensator for changes of temperature of the cold junction, thus making corrections for that purpose unnecessary.

The empirical formula applying to the use of the *Pt, Pt–Rh,* and to the *Pt, Pt–Jr* thermometer is given by Dr. W. C. Waidner as follows

$$e = -a + b\,(T - t) + c\,(T^2 - t^2)$$

which becomes when $t = 0$

$$e = -a + b\,T + cT^2.$$

In the above formula e is the electro-motive force, T the centigrade temperature of the hot junction and t that of the cold. As there are three constants, a, b and c, in the above formula, it is evident that in order to standardize, three points must be determined from calibration.

Holman has proposed the following formula

$$e = m\,(T^n - t^n) \quad \text{when } t = 0,$$
$$e = mT^n$$

from which

$$\log e = n \log T + \log m.$$

Holman's formula has been found sufficiently accurate for most purposes, and having only two constants requires only two points to be found by calibration.

Professor Brown of McGill University has devised a form of the Callendar instrument in which the difference of temperature is determined by the current required to make equal resistance in two different circuits, which condition is indicated by the use of a telephone which at that instant transmits no sound.

303. Electrical Resistance Thermometer.— This instrument is based on the well known law of increase of electrical resistance with increase of temperature. From this law it can be deduced that the difference of temperature when a constant current is flowing through a conductor is a function of the difference in resistance.

This thermometer was first constructed by Siemens about 1874, in a form which did not give reliable results. It has been improved and perfected by Callendar, Griffiths and others, and is for many purposes the most accurate thermometer built at the present time.

Callendar constructs his thermometer by winding a coil of fine platinum wire on a serrated mica frame, so that the wire is in contact with its supporting frame for only a minute portion of its length. He connects leads of larger pt. wire at top and bottom of coil so as to compensate for varying depths of immersion. Leads and coil are then inserted in a protecting tube of porcelain which is glazed only on the outside.

The resistance is measured by a Wheatstone bridge, a galvanometer or a potentiometer which may be specially constructed to read in degrees of temperature. Each thermometer must have a special calibration as the scales vary with the degree of purity of the metal.

Full discussions of the various methods of measuring high temperatures is to be found in a work by Dr. Carl Barrus, published by the U. S. Geological Survey, and also in an article by Dr. C. W. Waidner published in the Transactions of the Engineering Society of Western Pennsylvania in 1904.

304. Optical Pyrometers.—From the fact that the color of an incandescent body varies with the wave length and this again with the temperature, it is possible to determine the temperature of such bodies by their appearance.

For this purpose a number of optical pyrometers have been devised. The Mesuré and Nouel's pyrometric telescope measures the temperatures by taking advantage of the rotation of the plane of polarization of light passing through a quartz plate cut

perpendicular to its axis. The angle of rotation is directly proportional to the thickness of the quartz, and approximately inversely proportional to the square of the wave length.

Light from an incandescent object, passing through the slightly ground diffusing-glass G (Fig. 185), enters a polarizing

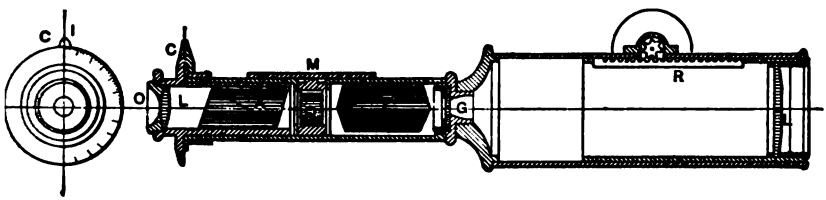

FIG. 185.—MESURÉ AND NOUEL PYROMETRIC TELESCOPE.

nicol P, and, traversing the quartz plate Q, strikes the analyzer A, and is seen through the eye piece OL.

In the use of the instrument the analyzer is turned until the object appears to have a lemon-yellow color. The position of

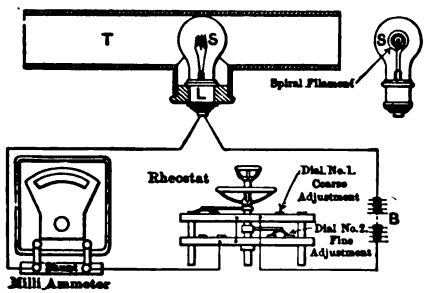

FIG. 186.—THE MORSE THERMO-GAUGE.

the analyzer is indicated by the graduated circle C, the reading of which may be referred to a temperature scale. Because of the variations due to personal errors of different observers the uncertainties of observations are likely to amount to fully 100° C. The instrument is very convenient for use and is approximately accurate.

The Morse thermo-gauge is shown in Fig. 186. It employs an incandescent lamp with a rheostat arranged so that the current flowing through it and its consequent brightness may be regulated. The amount of current flowing through is shown by a milli-voltmeter connected in circuit, the reading of which can be referred to a scale for the determination of temperature. The lamp is adjusted from an experimental scale for its degree of brightness at different ages.

In using this instrument the incandescent lamp is located between the eye and the object whose temperature is to be measured, and the current is regulated until the lamp is invisible. This instrument is designed for use in hardening steel and has an extensive use in that industry.

CHAPTER XIII.

METHODS OF DETERMINING THE AMOUNT OF MOISTURE IN STEAM.

305. Quality of Steam.—*Degree of Superheat.*—Steam may be dry and saturated, wet or superheated, as described in Article 265, page 340. The term *quality* is used to express the relative condition of the steam as compared with dry and saturated steam of the same pressure. It is in any case the *total heat* in a pound of the sample steam, less the *heat of the liquid*, divided by the total *latent heat of evaporation* of one pound of dry steam at the same pressure, see page 343.

For moist or wet steam, which is to be considered as made up of a mixture of water and dry steam, the quality would equal the percentage by weight of dry steam in the mixture.

For superheated steam the quality would exceed unity, and is to be considered as that weight of dry and saturated steam, the heat in which is equivalent to that in one pound of the superheated steam, neglecting in both cases the *heat of the liquid.*

In case of superheated steam, its temperature is higher than that of dry and saturated steam at the same pressure: this excess of temperature is termed *degree of superheat.*

306. Importance of Quality Determinations.—The importance of correctly determining the quality of steam is great, because the percentage of water carried over in the steam in the form of vapor or drops of water may be large, and this water is an inert quantity so far as its power of doing work is concerned, even if not a positive detriment to the engine. Any tests for the efficiency of engine or boiler not accompanied with determinations of the amount of water carried over in the

steam would be defective in essential particulars, and might lead to erroneous or even absurd results.

307. Methods of Determining the Quality.—The methods of measuring the amount of moisture contained in steam may be considered under three heads: first, *Calorimetry proper*, in which the method is based on some process of comparing the heat actually existing in a pound of the sample with that known to exist in a pound of dry and saturated steam at the same pressure. Secondly, *Mechanical Separation* of the water from the steam, involving the processes of separation and of weighing. Thirdly, a *Chemical Method*, in which case a soluble salt is introduced into the water of the boiler. This salt is not absorbed by dry steam, and if it is found in the steam it indicates the presence of water. The quality is equal to the ratio of salt in the steam to that in an equal weight of water drawn from the boiler.

All methods for determining the quality of steam are included under the head of *calorimetry*, and instruments for determining the quality are termed *calorimeters*.

308. Classification of Calorimeters.—The following classification of different forms of calorimeter is convenient and comprehensive:

- Calorimeters
  - Condensing
    - Jet
      - Barrel or Tank.
      - Continuous.
    - Surface
      - Barrus—Continuous.
      - Hoadley Calorimeter.
      - Kent—Tank Calorimeter.
  - Superheating
    - External—Barrus Superheating.
    - Internal—Peabody Throttling.
  - Directly determining moisture
    - Separator.
    - Chemical.

309. Error in Calorimetric Processes.—The calorimetric processes proper depend on the method of measuring the heat actually existing in a pound of the sample steam at a known pressure. This measurement is then compared with the results given in a steam-table for dry and saturated steam, and the quality is computed as will be explained later.

In nearly every calorimetric process the heat of the sample is determined by condensing the steam at atmospheric pressure, or at least measuring the heat when its conditions of pressure and temperature are different from its original state. This process involves no error. The following is a statement of an investigation concerning it made by Sir William Thomson:*

"If steam have to rush through a long fine tube or through a fine aperture within a calorimetric apparatus, its pressure will be diminished before it is condensed; and there will, therefore, in two parts of the calorimeter be saturated steam at different temperatures; yet on account of the heat developed by the fluid friction, which would be precisely the equivalent of the mechanical effect of the expansion wasted in the rushing, the heat measured by the calorimeter would be precisely the same as if the condensation took place at a pressure not appreciably lower than that of the entering steam."

310. Use of Steam-tables.—In reducing calorimetric experiments steam-tables will be required. The explanation of the terms used will be found in Article 265, page 340, and tables will be found in the Appendix of the book.

Students will please notice, that the pressures referred to in the steam-tables are absolute, not *gauge* pressures, and that gauge pressures are to be reduced to absolute pressures, by adding the barometer-reading reduced to pounds per square inch, before using the tables.

The following symbols will be employed to represent the different properties of steam:

TABLE OF SYMBOLS.

Properties of Steam.	Symbol.	Properties of Steam.	Symbol.
Pressure, pounds per sq. in.	p	Total heat B. T. U.	λ or H
Pressure, pounds per sq. foot	P	Weight of cu. ft. of steam lbs.	δ or W
Temperature, degrees Fahr.	t	Vol. of 1 lb. steam, cubic ft.	v or C
Temperature absolute.....	T	Vol. of 1 lb. water, cubic ft.	σ
Heat of the liquid.....	q or S	Change in volume $v - \sigma$...	u
Internal latent heat	ρ or I	Quality of steam	x
External latent heat.....	APu or E	Per cent of moisture.....	$1 - x$
Total latent heat.....	r or L	Degree of superheat.....	D

* Mathematical Papers, XLVIII., p. 194.

The quantities q, ρ, APu, r, and λ are given in B. T. U. per pound of saturated steam reckoned from 32° Fahr.

311. General Formula for the Heat in One Pound of Steam.—The heat existing in one pound of steam with any quality x can be expressed by the formula

$$x\rho + q = h. \quad . \quad . \quad . \quad . \quad . \quad . \quad . \quad . \quad (1)$$

The heat, however, which is required to raise water from 32° F. and convert it into steam at a given temperature will include the external latent heat, and will be expressed by the formula

$$xr + q = h'. \quad . \quad . \quad . \quad . \quad . \quad . \quad . \quad . \quad (2)$$

The heat that may be given out by condensation or change of pressure is expressed in equation (2); that which exists in the steam without change of pressure or external work, by equation (1).

Since in all calorimetric processes the steam is condensed, or at least the pressure changed, equation (2) is to be employed to represent the available heat.

If the pressure of the steam is known, r and q can be found from the steam-tables. If the heat h in B. T. U. above 32° can be found for the sample steam, all the quantities in the above equation with the exception of x are known, and we shall find

$$x = \frac{h' - q}{r}. \quad . \quad . \quad . \quad . \quad . \quad . \quad . \quad . \quad (3)$$

In case x is greater than unity, the steam is superheated, and the degree of superheat

$$D = \frac{(x - 1)r}{0.48}; \quad . \quad . \quad . \quad . \quad . \quad . \quad . \quad . \quad (4)$$

when 0.48 equals the specific heat of steam, c_p.

312. Methods of Determining the Heat in a given Sample of Steam.—There are two methods of determining the heat h in a given sample of steam.

1. *Condensing the Steam at Atmospheric Pressure.*—In this case the weight of the steam is obtained by weighing the condensing water before and after condensation has taken place and determining the corresponding temperatures. Thus let the weight of condensing water be represented by W, that of the condensed steam by w; the temperature of the condensing water cold by t_1, the condensing water warm by t_2; the original temperature of the steam by t, that of the condensed steam by t_3. Suppose that the calorimeter absorb heat to the same extent as k pounds of water; then the heat added by condensing one pound of steam is equal to

$$\frac{W+k}{w}(t_2-t_1) \quad . \quad . \quad . \quad . \quad . \quad . \quad . \quad (5)$$

The original heat above 32° from equation (2), page 363, is $xr+q$. Since in equation (5) the temperature is reckoned above zero, it will be more convenient to use, instead of $xr+q+32$, $xr+t$, which is very nearly identical.

Since the heat lost in condensing one pound of steam is equal to that gained by the water, we shall evidently have

$$xr+t-t_3=\frac{W+k}{w}(t_2-t_1);$$

from which

$$x=\frac{W+k}{w}\frac{(t_2-t_1)}{r}-\frac{(t-t_3)}{r} \quad . \quad . \quad . \quad . \quad (6)$$

If the temperature of condensed steam equal that of the warm condensing water, $t_3=t_2$, which is the usual condition of condensation.

2. *Superheating the Steam.*—If the pressure and temperature of superheated steam is known, the *degree of superheat* D can be found by deducting the normal temperature, as given in the steam-table for that pressure, from the observed temperature. The total heat in a pound of the superheated steam

is equal to that in a pound of saturated steam, as given by the steam-tables, plus the product of the degree of superheat into the specific heat c_p of the steam; that is,

$$H = \lambda + c_p D.$$

The superheating may be done by extraneous means, as in the Barrus superheating calorimeter, or by throttling, as in the throttling calorimeter. In the latter the heat required for superheating is obtained by reducing the pressure, which, being accompanied by a corresponding reduction of boiling point, liberates heat sufficient to evaporate a small percentage of moisture only.

In the case of the superheating calorimeter, the heat required to evaporate the moisture and superheat the steam is measured by the loss of temperature n in an equal weight of superheated steam, so that

$$c_p n = r(1 - x) + c_p D;$$

$$1 - x = c_p \frac{(n - D)}{r}. \quad . \quad . \quad . \quad . \quad . \quad . \quad . \quad (7)$$

In the case of the throttling calorimeter there is no change in the total amount of heat, but there is a change of pressure, so that the quantities in the first member of (8) correspond to the original pressures of steam before throttling, and those in the second member to the calorimeter pressures after throttling, and

$$xr + q = \lambda_c + c_p D, \qquad x = \frac{\lambda_c - q + c_p D}{r}. \quad . \quad . \quad (8)$$

313. Condensing Calorimeters.—Condensing calorimeters are of two general classes: 1. The jet of steam is received by the condensing water, and the condensed steam intermingle directly with the condensing water. 2. The jet of steam is condensed in a coil or pipe arranged as in a surface condenser.

and the condensed steam is maintained separate from the condensing water.

The principle of action of both classes of condensing calorimeter is essentially the same, and is expressed by equation (6):

$$x = \frac{W + k(t_2 - t_1)}{w} \frac{}{r} - \frac{(t - t_2)}{r}.$$

In the first class $t_2 = t_3$, and

$$x = \frac{W + k(t_2 - t_1)}{w} \frac{}{r} - \frac{(t - t_2)}{r} \quad . \quad . \quad . \quad . \quad . \quad (9)$$

Both forms of condensing calorimeter can be made to act continuously or at intervals, and there are several distinct types of each.

The most common type of condensing calorimeter is one in which the condensing water is received in a barrel or tank, and hence is termed a barrel calorimeter. The special forms will be described later.

314. Effect of Errors in Calorimeter Determinations.

First. Condensing Calorimeters.—To determine the effect of error, suppose in each case the quantity under discussion to be a variable and differentiate the equation

$$x = \frac{\frac{W}{w}(t_2 - t_1) - (t - t_2)}{r}.$$

We have

$$\begin{aligned}
\Delta x \div \Delta W &= (t_2 - t_1) \div wr; \\
\Delta x \div \Delta w &= -(W \div w^2)(t_2 - t_1) \div r; \\
\Delta x \div \Delta t_1 &= [(W \div w) + 1] \div r; \\
\Delta x \div \Delta t_2 &= W \div wr.
\end{aligned}$$

Since $\Delta r = -\Delta t$, nearly, for ordinary pressures of steam, and further is a function of the pressure, we have approximately

$$\Delta p = \Delta \rho = -\Delta r;$$

$$\Delta x \div \Delta p = \left[\frac{W}{w}(t_2 - t_1) - t - r + t_2\right] \div r^2.$$

The weight of condensing water usually held by the barrel-calorimeters is from 300 to 400 lbs., while the weight of the steam condensed varies from 16 to 20 lbs., and the corresponding temperatures have a range of 50° to 70° F. For these cases it will be found that the percentage of error in quality, supposing other data correct, is approximately the same as the percentage of error in the weights. The error in thermometer-determination has nearly the same effect, whether made before or after the steam has been condensed. For the amounts usually employed the error of one fifth of one degree in temperature has about the same effect as one half of one per cent error in weight; that is, it makes an error of about the same amount in the quality of steam.

The following shows in tabular form the effect of errors with condensing calorimeters in which the ordinary weights of water and of steam are used:

TABULATION OF ERRORS.

Error in Condensing Water.		Error in Condensed Steam.		Error in Temperature, Cold Water.		Error in Temperature, Warm Water.		Error in Steam-pressure.		Resulting Error in Quality. Per cent.
Lbs.	Per ct.	Lbs.	Per ct.	Degs.	Per ct.	Degs.	Per ct.	Lbs.	Per c.	
Total wt.	= 360 lbs.	Total wt.	= 20 lbs.	Temp.	=50° F.	Temp.	=120° F.	Pr. =	88 lbs.	
3.6	1.0	0.2	1.0	0.53	1.2	0.65	0.60	7.0	8.0	1.2
1.8	0.5	0.1	0.5	0.27	0.6	0.30	0.30	3.5	4.0	0.6
1.5	0.40	0.08	0.4	0.18	0.5	0.25	2.5	3.0	3.5	0.5
0.3	0.08	0.016	0.08	0.045	0.1	0.05	0.50	0.6	0.7	0.1
Total wt.	= 300 lbs.	Total wt.	= 20 lbs.			0.25				
1.5	0.5	0.1	0.5	0.2				2.2		0.5

In the table, the errors in the various observations expressed in the same horizontal line have the same effect on the result.

From the table it is seen, for the given weights, that an error of 3.6 pounds in condensing water, of 0.2 pound in condensed steam, of 0.53° F. in temperature of cold water, of 0.65° F. in warm water, or of 7 pounds in steam-pressure will severally make an error in the result of 1.2 per cent. Expressed in percentages, an error of 1 per cent in weight or 1.2 and 0.6 per cent in thermometer-readings makes an error in the quality of 1.2 per cent.

The conditions for determination of moisture within one half of one per cent require—

1. Scales that weigh accurately to half of one per cent of the quantity to be weighed.
2. Thermometers that give accurate determinations to about one fifth of one degree F.
3. An accurate pressure-gauge.
4. Correct observations of the resulting quantities.
5. Determination of loss caused by calorimeter.

Secondly. Superheating Calorimeters.—The *Barrus Superheating Calorimeter.*—In this, if $t_s - t$ is the gain of temperature of the sample steam, and $t_s - t_1$ is the loss of temperature in the superheated steam, we have, neglecting radiation,

$$1 - x = 0.48[t_s - t_1 - (t_s - t)] \div r.$$

In the *Throttling Calorimeter*, where the steam is superheated by expanding, we have by equation (7), making $c_p = 0.48$,

$$x = \frac{\lambda + 0.48D - q}{r}.$$

In either form of superheating calorimeter the effect of an error of one degree in temperature is to make an error in x of 0.06 of one per cent, while an error of 9° in temperature will affect the value of x but 0.5 per cent. The boiling-point

should be correctly determined, however, especially if the amount of superheating is small.

An error in gauge-reading has about one half the effect on the quality of the steam as in the other class of calorimeters.

315. Method of Obtaining a Sample of Steam.—It is usually arranged so as to pass only a very small percentage of the total steam through the calorimeter, and it is important that this sample shall fairly represent the entire quantity of steam. From experiments made by the author, it is quite certain that the quality varies greatly in different portions of the same pipe, and that it differs more in horizontal than in vertical pipes. Steam drawn from the surface of the pipe is likely to contain more than the average amount of moisture; that from the centre of the pipe to contain less. The better method for obtaining a sample of steam is to cut a long threaded nipple into which a series of holes may be drilled, and screw this well into the pipe. Half-inch pipe is generally used for calorimeter connections, and it may be screwed into the main pipe one half or three quarters of the distance to the centre, with the end left open and without side-perforations, as shown in Fig. 187, or screwed three fourths the

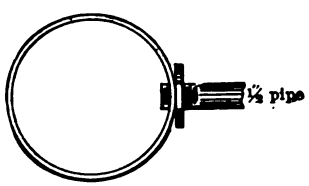

FIG. 187.

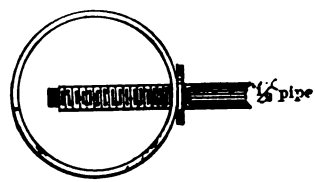

FIG. 188.

COLLECTING-NIPPLES.

distance across the pipe, a series of holes drilled through the sides, and the end left open or stopped, as shown in Fig. 144. A lock-nut on the nipple, which can be screwed against the pipe when the nipple is in place, will serve to make a tight joint. The best form of nipple is not definitely determined, although many experiments have been made for this purpose; a form extending nearly across the pipe and provided with a

slit or with numerous holes is probably preferable. When the current of steam is ascending in a vertical pipe, the water seems to be more uniformly mixed than when descending in a vertical pipe or when moving in a horizontal one. There is, however, considerable variation for this condition, especially if the steam contains more than 3 per cent of water.

316. Method of Inserting Thermometers.—In the use of calorimeters it is frequently necessary to insert thermometers

FIG. 189.—STEAM-THERMOMETER.

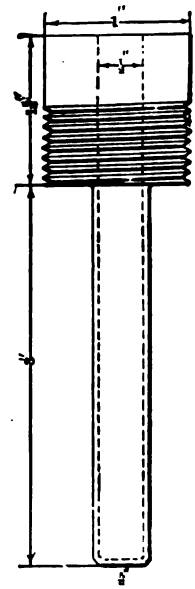

FIG 190.—THERMOMETER-CUP.

into the steam in order to correctly measure the temperature. For this purpose thermometers can be had mounted in a brass case, as shown in Fig. 189, which will screw into a threaded opening in the main pipe.

The author prefers to use instead a thermometer-cup of the form shown in Fig. 190, which is screwed into a tapped open-

ing in the pipe. Cylinder-oil or mercury is then poured into the cup, and a thermometer with graduations cut on the glass inserted. The thermometer-cups are usually made of a solid brass casting, the outside being turned down to the proper dimensions and threaded to fit a $\frac{3}{4}$-inch pipe-fitting. The inside hole is drilled $\frac{1}{2}$ inch in diameter, and the walls are left $\frac{1}{16}$ inch thick. The total length varies from $4\frac{1}{2}$ to 6 inches—depending on the place where it must be used. In either case it is essential that the thermometer be inserted deep into the current of steam or water, and that no air-pocket forms around the bulb of the thermometer. The thermometer should be nearly vertical, and as much of the stem as possible should be protected from radiating influence.

If the thermometer is to be inserted into steam of very little pressure, the stem of the thermometer can be crowded into a hole cut in a rubber cork which fits the opening in the pipe. In case the thermometer cannot be inserted in the pipe it is sometimes bound on the outside, being well protected from radiation by hair-felting; but this practice cannot be recommended, as the reading is often much less than is shown by a thermometer inserted in the current of flowing steam. In the use of thermometers, breakages will be lessened by carefully observing the directions as given in Article 286, p. 370.

317. Determination of the Water-equivalent of the Calorimeter. — The calorimeters exert some effect on the heating of the liquid contained in them, since the inner substance of the calorimeter must also be heated. This effect is best expressed by considering the calorimeter as equivalent to a certain number of pounds of water producing the same result. This number is termed the *water-equivalent* of the calorimeter. The water-equivalent, k, can be found in three ways:

1. By computing from the known weight and specific heat of the materials composing the calorimeter. Thus let c be the specific heat, W_c the weight; then

$$k = cW_c.$$

2. By drawing into the calorimeter, when it is cooled down to a low temperature, a weighed quantity of water of higher temperature and observing the resulting temperature. Thus let W equal the weight of water, t_1 the first and t_2 the final temperatures, and k the water-equivalent sought. Since the heat before and after this operation is the same,

$$(W+k)t_2 = Wt_1.$$

From which

$$k = \frac{W(t_1 - t_2)}{t_2}.$$

3. By condensing steam drawn from a quiescent boiler, and thus known to be dry and saturated, with a weighed quantity of water of known temperature in the calorimeter; the temperature, pressure, and weight of the steam being known. The conditions are the same as for equation (6), page 394, all the quantities being known excepting k.

By solving equation (6),

$$k = \frac{w(rx + t - t_2)}{t_2 - t_1} - W. \quad \ldots \quad (10)$$

For the barrel and jet condensing calorimeters generally, $t_2 = t_1$, and we have

$$k = \frac{w(rx + t - t_2)}{t_2 - t_1} - W.$$

The cooling effect of superheating calorimeters is generally expressed in degrees of temperature in the reading of one of the thermometers.

SPECIAL FORMS OF CALORIMETERS.

318. Barrel or Tank Calorimeter.—The barrel calorimeter belongs to that class of condensing calorimeters in which a jet of steam intermingles directly with the water of condensation. It is made in various ways; in some instances the

walls are made double and packed with a non-condensing substance, as down or hair-felting, to prevent radiation, and the instrument is provided with an agitator consisting of paddles fastened to a vertical axis that can be revolved and the water thoroughly mixed; but it usually consists of an ordinary wooden tank or barrel resting on a pair of scales, as shown in Fig. 191.

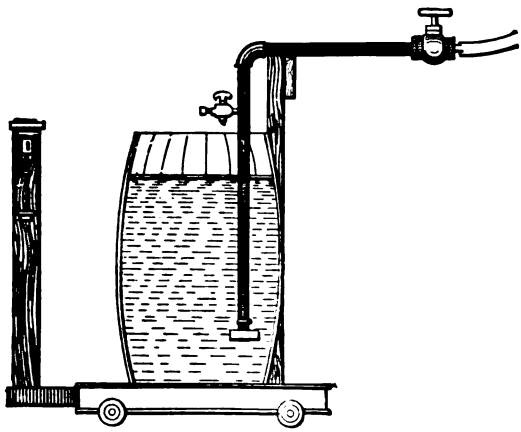

FIG. 191.—THE BARREL CALORIMETER.

A sample of steam is drawn from the main steam-pipe by connections, as explained in Article 315, page 369, and conveyed by hose, or partly by iron pipe and partly by hose, to the calorimeter. In the use of the instrument, water is first admitted to the barrel and the weight accurately determined. The pipe is then heated by permitting steam to blow through it into the air; steam is then shut off, the end of the pipe is submerged in the water of the calorimeter, and steam turned on until the temperature of the condensing water is about 110° F. The pipe is then removed, the water vigorously stirred, the temperature and the final weight taken. If the effect of the calorimeter, k, expressed as additional weight of water, is known, the quality can be computed as in equation (6), page 394.

$$x = \frac{(W + k)(t_2 - t_1)}{wr} - \frac{(t - t_2)}{r}. \quad . \quad . \quad . \quad (6)$$

A tee screwed crosswise of the pipe, as shown in Fig. 189, forms an efficient agitator, provided the temperature be taken immediately after the steam is turned off.

The pipe may remain in the calorimeter during the final weighing if supported externally, and if air be admitted so that it will not keep full of water; in such a case, however, it should also be in the barrel during the first weighing, or else the final weight must be corrected for displacement of water by the pipe. The effect of displacement is readily determined by weighing with and without the pipe in the water of the calorimeter.

The determination of the water-equivalent of the barrel calorimeter will be found very difficult in practice, and it is usually customary to heat the barrel previous to using it, and then neglect any effect of the calorimeter. This nearly eliminates the effect of the calorimeter. The accuracy of this instrument, as shown in Article 314, page 397, depends principally on the accuracy with which the temperature and the weight of the condensed steam are obtained. The conditions for obtaining the temperature of the water accurately are seldom favorable, as it is nearly impossible to secure a uniform mixture of the hot and cold water; the result is that determinations made with this instrument on the same quality of steam often vary 3 to 6 per cent. From an extended use in comparison with more accurate calorimeters, the author would place the average error resulting from the use of the barrel calorimeter at from 2 to 4 per cent.

Example.—Temperature of condensing water, cold, t_1, is 52°.8 F.; warm, t_2, 109°.6 F. Steam-pressure by gauge, 79.7; absolute, 94.4. Entering steam, normal temperature, from steam-table, t, 323°.5 F. Latent heat, r, 888.2 B. T. U. Weight of condensing water cold, W, 360 pounds; warm, $W + w$, 379.1 pounds, wet steam, w, 19.1 pounds. Calorimeter-equivalent eliminated by heating. The quality

$$x = \frac{360}{19.1}\frac{(109.6 - 52.8)}{888.2} - \frac{323.5 - 109.6}{888.2} = 95.4.$$

319. Directions for Use of the Barrel Calorimeter.—*Apparatus.*—Thermometer reading to $\frac{1}{5}$ degree F., range 32° to 212°; scales reading to $\frac{1}{10}$ of a pound; barrel provided with means of filling with water and emptying; proper steam connections; steam-gauge or thermometer in main steam-pipe.

1. Calibrate all apparatus.

2. Fill barrel with 360 pounds of water, and heat to 130 degrees by steam; waste this and make no determinations for moisture. This is to warm up the barrel.

3. Empty the barrel, take its weight, add quickly 360 pounds of water, and take its temperature.

4. Remove steam-pipe from barrel; blow steam through it to warm and dry it; hang on bracket so as not to be in contact with barrel; turn on steam, and leave it on until temperature of resulting water rises to 110° F. Turn off steam; open air-cock at steam-pipe as explained.

5. Take the final weights with pipe in barrel, in same position as in previous weighings; also take weights with the pipe removed: calculate from this the displacement due to pipe, and correct for same.

Alternative for fourth and fifth operations.—Supply steam through a hose, which is removed as soon as water rises to a temperature of 110° F. Weigh with the hose removed from the barrel. Stir the water while taking temperatures.

6. Take five determinations, and compute results as explained. Fill out and file blank containing data and results.

7. Compute the value of the water-equivalent, k, in pounds by comparing the different sets of observations.

320. The Continuous-jet Condensing Calorimeter.—A calorimeter may be made by condensing the jet of steam in a stream of water passing through a small injector or an equivalent instrument. The method is well shown in Fig. 193. A tank of cold water, B, placed upon the scales R, is connected to the small injector by the pipe C; the injector is supplied with steam by the pipe S, the pressure of which is taken by the gauge P; the temperature of the cold water is taken at c, that of the warm water at g. Water is discharged into the

weighing-tank A. The amount taken from the tank B is the weight of cold water W; the difference in the respective weights of the water in tanks A and B is the weight of the steam w.

The quality is computed exactly as for the barrel calorimeter.

In case an injector is used, as shown in Fig. 192, the tank $?$ is not needed: water can be raised by suction from the tank l through the pipe d. The original weight of A will be that

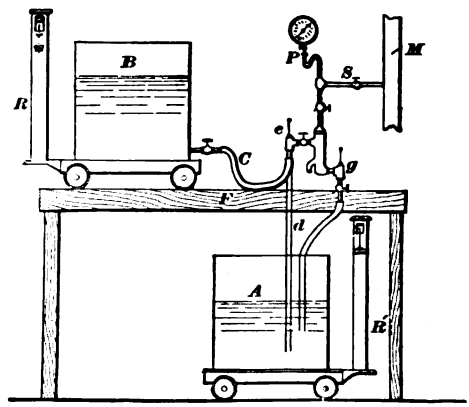

FIG. 192.—THE INJECTOR CALORIMETER.

of the cold water; the final weight will be that of steam added to the cold water.

In case an injector is not convenient, and the water is supplied under a small head, a very satisfactory substitute can be made of pipe-fittings, as shown in Fig. 193. In this case, steam of known pressure and temperature is supplied by the pipe A cold water is received at S', and the warm water is discharged at S. The temperature of the entering water is taken by a thermometer in the thermometer-cup T', that of the discharge by a thermometer at T. The steam is condensed in front of the nozzle C.

This class of instruments present much better opportunities of measuring the temperatures accurately than the barrel calorimeter, and the results are somewhat more reliable.

In the use of continuous calorimeters of any class, the instrument should be put in operation before the thermometers are put in place or any observations taken. The poise on the weighing-scale can be set somewhat in advance of its balancing position, and when sufficient water has been pumped out the scale-beam will rise; this may be taken as the signal

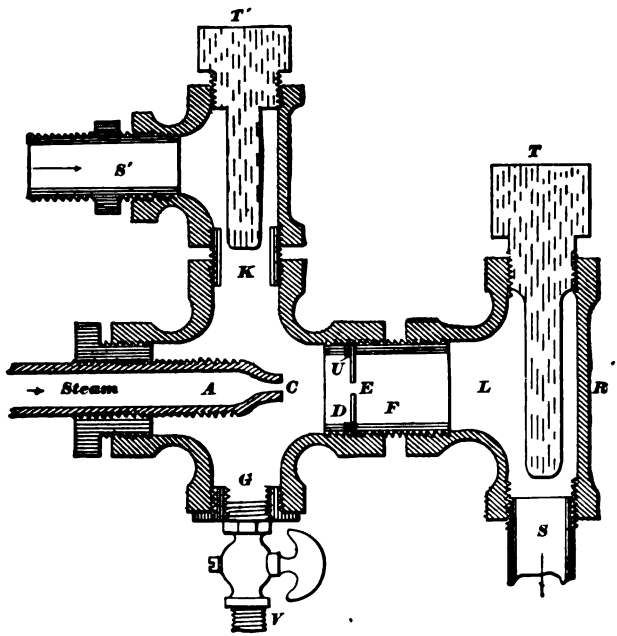

FIG. 193.—JET CONTINUOUS CALORIMETER.

for saving the water which has been previously wasted, and of commencing the run.

The water-equivalent of the calorimeter, k, will be small, and due principally to radiation. It can be found by passing hot water through the calorimeter and noting the loss in temperature.

321. The Hoadley Calorimeter.—This instrument belongs to the class of non-continuous surface calorimeters. The

instrument is described in Transactions of the American Society of Mechanical Engineers, Vol. VI., page 716, and consisted of a condensing coil for the steam, situated in the bottom of a tank-calorimeter, very carefully made to prevent radiation-losses. The dimensions were 17 inches diameter by 32 inches deep, with a capacity of about 200 pounds of water. The

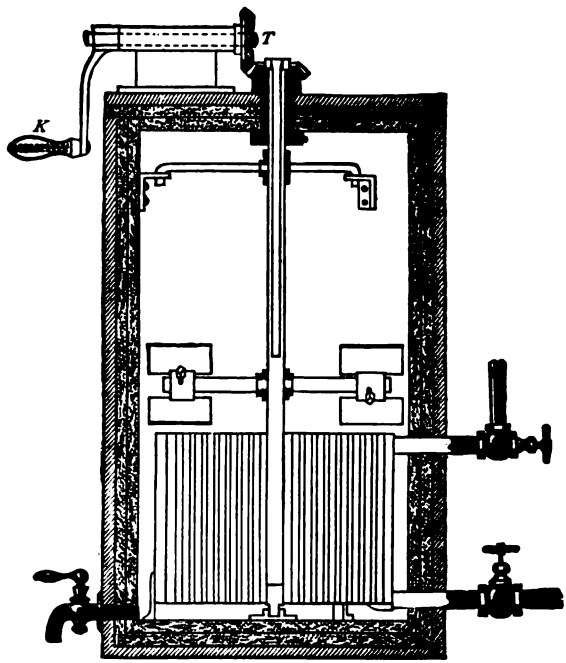

FIG. 194.—HOADLEY'S CALORIMETER.

calorimeter was made of three concentric vessels of galvanized iron, the spaces being filled with hair-felt and eider-down. The condenser consisted of a drum through which passed a large number of half-inch copper tubes, the steam being on the outside, the water on the inside, of these tubes; the agitator consisting of a propeller-wheel attached to an axis that could be rotated by turning the external crank *K*, effectually stirring the water. The thermometer for measuring the temperature was inserted in the axis of the agitator at *T*.

In the hands of Mr. Hoadley the instrument gave accurate determinations.

In practice the instrument was arranged as in Fig. 195; the calorimeter E was placed on the scales F, and supplied by cold water from the elevated barrel A. The temperature of the entering water was taken at C. Steam was admitted to the condensing-coil until the temperature of the condensing water reached, say, 110° F. The weights before and after

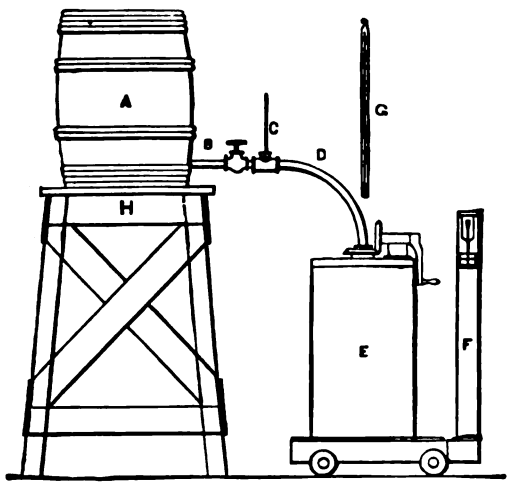

FIG. 195.—HOADLEY'S CALORIMETER ARRANGED FOR USE.

adding steam were taken by the scales F; the temperature of the warm condensing water was taken by a thermometer, G, inserted in the axis of the agitator. The water-equivalent was determined as explained in Article 317, page 401, and the quality computed by equation (6), page 394. The rate of cooling was determined, and an equivalent amount added as a correction for any loss of heat by radiation.

322. **The Kent Calorimeter.**—This instrument differs from the Hoadley instrument principally in the arrangement of the condensing coil. This when filled with steam could be removed from the calorimeter, so as to enable the weight of

steam to be taken on a smaller and more delicate pair of scales than those required for the condensing water, thus giving more accurate determinations of the weight of the steam condensed.

323. The Barrus Continuous Calorimeter.—This calorimeter is shown in Fig. 196 in section and in Fig. 197 in perspective. It consists of a steam-pipe, *af*, surrounded by a

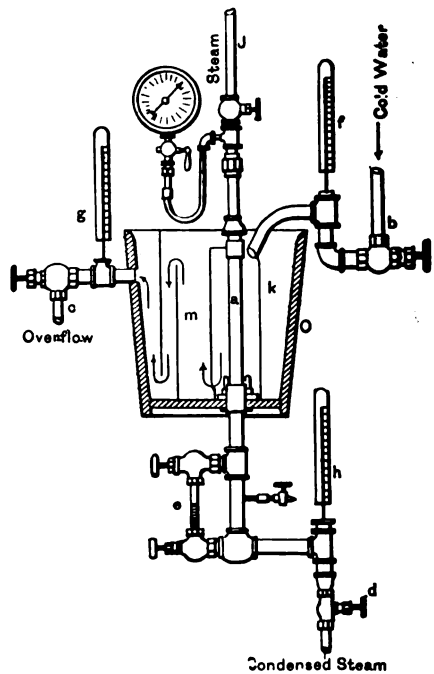

FIG. 196.—BARRUS CONTINUOUS CALORIMETER.

tub or bucket, *O*, into which cold water flows; the condensing water is received as it enters the bucket in a small brass tube, *k*, surrounding the pipe *a*, and is conveyed over and under baffle-plates, *m*, so as to be thoroughly mixed with the water in the vessel, and is finally discharged at *c*. Thermometers are placed at *f* and at *g* to take the temperature of the water as it

enters and leaves, and finally the condensing water is caught from the overflow and weighed. The condensed steam falls below the calorimeter; by means of the water-gauge glass at

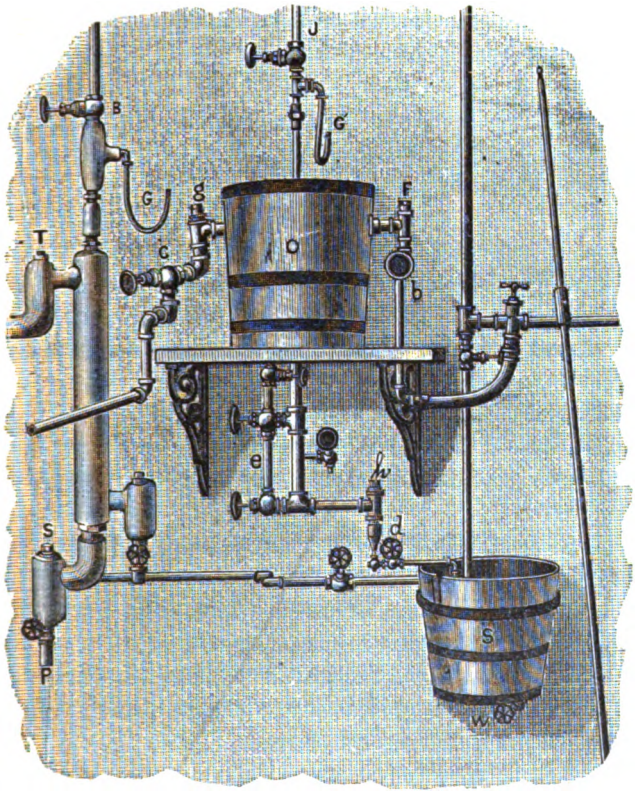

FIG. 197.—THE BARRUS CONTINUOUS AND SUPERHEATING CALORIMETERS.

it may be seen and kept at a constant height. The temperature of the condensed steam while it is still under pressure is shown by a thermometer at *h*. In order to use the calorimeter it is necessary to weigh the condensed steam; this cannot be done without further cooling, as it would be converted into steam were the pressure removed. For this purpose it is passed through a coil of pipe immersed in a bucket filled with water,

shown at S in Fig. 197. The water used in the cooling bucket S has no effect on the quality of the steam and is not considered in the results; it is allowed to waste, but the condensed steam is caught at W, Fig. 197, and weighed.

The quality of steam is computed by omitting k in formula (6), page 394. Hence

$$x = \frac{W}{w}\frac{(t_2 - t_1)}{r} - \frac{(t - t_2)}{r}.$$

w is the weight of condensed steam after correction for radiation-loss as explained in Article 324; w being equal to $w' - u$.

324. Directions for Using the Barrus Continuous Calorimeter.—*Apparatus needed.*—Thermometers; pail for receiving condensed steam; tank and scales for the condensing water.

Directions.—1. Fill the thermometer-cups with cylinder-oil. (Do not put thermometers in place until apparatus is working.)

2. Turn on condensing water and steam; regulate the flow of condensing water so as to keep the bucket O nearly full, and the temperature of the discharge-water as much above temperature of the room as injection is below: this should be about 110° F. Regulate the flow of condensed steam so as to keep the water in the glass e at a constant level. Turn water on to the cooling coil in the bucket S, and reduce the condensed steam to a temperature of about 120°.

3. After the apparatus is working under uniform conditions, put the thermometers in the cups for temperature of injection and discharge water, and having previously weighed the vessels, at a given signal, note time and commence to catch the condensed steam and the condensing water. Continue the run until about 360 or 400 pounds of condensing water has run into the receiving tank. Without disturbing the condition of the apparatus, commence simultaneously to waste the discharge from both pipes. Find the weights of

condensed steam (w') and condensing water (W); note time of ending run.

4. Make three more runs similar to the first.

5. To find the radiation-correction of the instrument: Empty the bucket O of condensing water, and surround the condensing tube a with hair-felting; make a run of the same length, and with steam of same pressure as in the previous runs. The weight of steam condensed will be the radiation-loss, which we call u, and is to be deducted from the weight of condensed steam obtained in the previous runs of the same length. Find the condensation per hour.

6. Work up quality of steam by the formula

$$x = \left[\frac{W}{w' - u}(t_2 - t_1) - (t - t_2)\right] \div r.$$

Make report as described for other calorimeters.

Example.—The following is the result of a trial with the Barrus continuous calorimeter: Temperature of injection-water, $t_1 = 37°.5$ Fahr.; temperature of discharge-water, $t_2 = 83°.8$ Fahr.; temperature of condensed steam, $t_2 = 304.9$ Fahr.; steam-pressure by gauge, 72.4 lbs.; temperature of entering steam, $t = 317°.9$; length of test, 40 minutes; weight of cooling water, $W = 573.5$ lbs.; weight of condensed steam, $w' = 29.89$ lbs.; radiation-loss $u = 0.13$ lb. Neglecting value of u,

$$x = \frac{573.5}{29.89}\frac{(83.8 - 37.5)}{891} - \frac{(317.9 - 304.9)}{891}$$

$$= \frac{19.21 \times 46.3 - 13.0}{891} = \frac{876.4}{891} = 98.4.$$

$x = 98.4$ if not corrected for radiation-loss. If corrected,

$$x = \left(\frac{573.5}{29.76}46.3 - 130\right) \div 891 = 98.9.$$

325. Forms for Use with Condensing Calorimeters.

MECHANICAL LABORATORY, SIBLEY COLLEGE, CORNELL UNIVERSITY.

PRIMING TEST WITH CONDENSING CALORIMETER.

Made by..... .....189..

Test of..... Steam.....

at....., N. Y.

Kind of calorimeter .....

Number of run.....	.....	I.	II.	III.	IV.	V.
	Symbols.					
Duration of run, minutes.....	.....	.....	.....	.....	.....	.....
Gauge-pressure, lbs	.....	.....	.....	.....	.....	.....
Absolute pressure, lbs.....	P	.....	.....	.....	.....	.....
Scale-readings, tare, lbs	V	.....	.....	.....	.....	.....
Tare and cold water, lbs.....	$W + V$	.....	.....	.....	.....	.....
Final weight, lbs.....	.....	.....	.....	.....	.....	.....
Quantities:						
Condensing water, lbs.....	W	.....	.....	.....	.....	.....
Condensed steam, lbs	w	.....	.....	.....	.....	.....
Temperatures, deg. Fahr.:						
Condensing water, cold	t_1	.....	.....	.....	.....	.....
Condensing water, warm.....	t_2	.....	.....	.....	.....	.....
Condensed steam	t_3	.....	.....	.....	.....	.....
Steam at pressure P.....	t	.....	.....	.....	.....	.....
Ratio water to steam.....	$W \div w$	.....	.....	.....	.....	.....
Quality, per cent.....	x	.....	.....	.....	.....	.....
Per cent moisture.....	$1 - x$	.....	.....	.....	.....	.....
Degree of super-heat..... ..	D	.....	.....	.....	.....	.....

Correction due to displacement of water by hose.....lbs.

Calorimeter-equivalent.....lbs. How found..... .....

.....

Temp. room.....deg. Fahr. Barometer-reading.....inches

Quality $x = \left[\frac{W}{w}(t_2 - t_1) - (t - t_3)\right] \div r.$

Degree of super-heat $D = (x - 1)r + 0.48.$

CALORIMETER TEST.

Date..... No.....

No. of Signal.	Time.	Difference.	Condensing Water. Weight.	Condensing Water. Diff. W	Condensed Water. Weight.	Condensed Water. Diff. w	Temperature of Condensing Water. Hot. t_2	Temperature of Condensing Water. Cold. t_1	Temperature Condensed Water. t_3	Temperature of Room.	Gauge-pressure.	Barometer.
Total.												
Aver.												
Cor.												

Duration of test..... min.

Weight of steam condensed..... lbs.

Weight of condensing water..... "

Average temperature of hot condensing water....C.; ....Fahr.; ....B.T.U.

" " " cold " " .... " .... " .... "

" " " condensed steam..... " .... " .... "

" " " room..... " ....deg. C.

" pressure of air.....lbs. per sq. in.

" absolute pressure of the steam..... " " "

Thermal units in water corresponding to absolute pressure of steam....B.T.U.

Heat acquired by condensing water..... "

Heat given up by condensed steam in cooling to temperature of thermometer in same. ..... "

Weight of water condensed by radiation.....lbs.

Heat given up by each pound of steam in condensing.....B.T.U.

Latent heat of one pound of steam at average absolute pressure..... "

Per cent of.....

Signed.....

326. Barrus Superheating Calorimeters.—In the *Barrus Superheating Calorimeter*, Fig. 198, the steam-pipe leading from the main is bifurcated, one branch, *E*, passing over the flames of a large Bunsen burner, the other passing upward, and finally downward, when it is jacketed by the enlargement of the first branch. The branches discharge separately, each through equal orifices, about one-eighth inch in diameter.

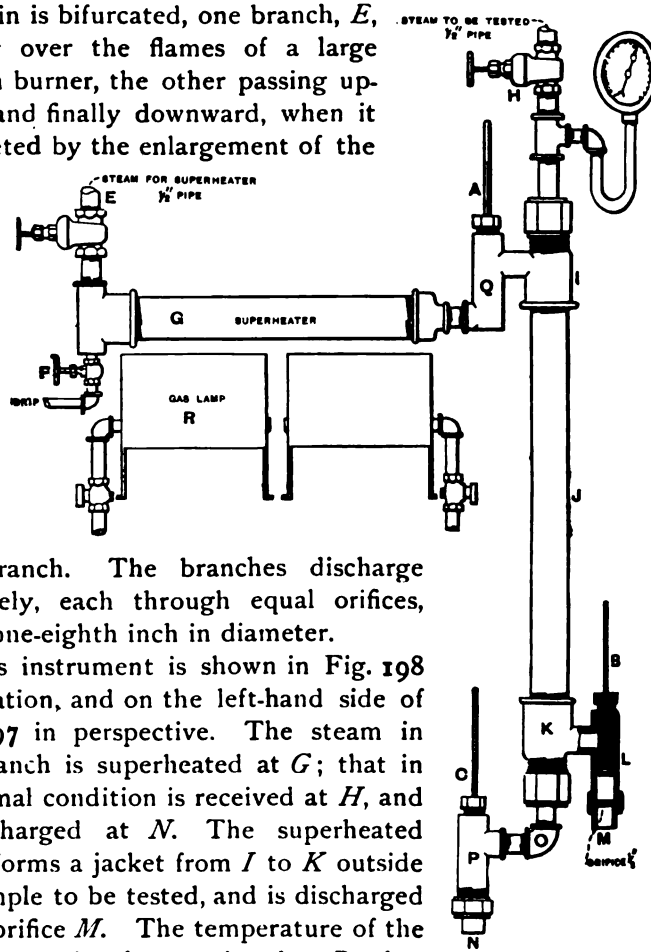

FIG. 198.—BARRUS SUPERHEATING CALORIMETER.

This instrument is shown in Fig. 198 in elevation, and on the left-hand side of Fig. 197 in perspective. The steam in one branch is superheated at *G*; that in its normal condition is received at *H*, and is discharged at *N*. The superheated steam forms a jacket from *I* to *K* outside the sample to be tested, and is discharged at the orifice *M*. The temperature of the jacket steam is taken at *A* and at *B*; that of the normal steam is measured at *C*, as it is discharged; it is found as it enters from its pressure taken at *H*, by reference to the steam-table.

The theory of this calorimeter is as follows:

1. An equal weight of steam flows through each branch of the pipe.

2. The steam, superheated by the gas-flame, is used as a jacket for the other branch, and parts with as much heat, except for radiation, as the other gains.

3. This amount may be measured provided the steam discharged from the central tube is superheated.

To measure this gain or loss of heat, thermometers are placed to take the temperature of steam as it enters and leaves the jacket, and on the central pipe near the same places.

Formula.—Let $(1 - x)$ be the amount of water to be evaporated; in so doing it will take up from the jacket-steam $r(1 - x)$ heat-units. Let t be the normal temperature of the steam at the gauge pressure; let T_1 be the temperature of the superheated jacket-steam at entering, and T_2 as it leaves; let T_3 be the temperature of the superheated steam discharged from the sample pipe, and let radiation-loss in degrees F. be l. If the specific heat of steam be 0.48, since gain and loss of heat are equal, we have

$$0.48(T_1 - T_2 - l) = r(1 - x) + 0.48(T_3 - t),$$

$$\therefore \quad 1 - x = 0.48[T_1 - T_2 - l - (T_3 - t)] \div r;$$

from which x may be found.

To find l, the radiation-loss in degrees, shut off steam in the branch leading to the centre steam-pipe, and find reading of thermometers T_1 and T_2. After a run of same length as in test, take $l = T_1 - T_2$.

Directions for using Barrus Superheating Calorimeter.—Apparatus needed.—Three thermometers reading 400° F. each, and pressure-gauge, superheating lamps, etc.

First. Calibrate instruments, and ascertain by a run of twenty minutes that equal amounts of steam are discharged from each orifice. This may be done by condensing the steam.

Second. Put cylinder-oil in oil-cups; attach gauge.

327. Thomas Electric Superheating Calorimeter. — An electric superheating calorimeter has recently been designed (see Vol. XXV, A.S.M.E.), by Prof. Carl C. Thomas, in which the steam flowing through the instrument is superheated by an electric current supplied for that purpose, the energy of which is measured. The heat derived from the electric current is absorbed in (1) evaporating such moisture as the steam may contain (2) superheating the steam from a temperature t to a temperature T_s (3) in overcoming the radiation loss. The equation representing this action would be as follows:

$$\frac{E}{W} = r\,(1 - x) + c\,(T_s - t) + R$$

from which $$1 - x = \frac{1}{r}\left[\frac{E}{W} - c\,(T_s - t) - R\right]$$

In the above equations, E is the electrical energy expressed in B.T.U. (equal to the watts divided by 17.56), W the weight of steam discharged, r the latent heat, x the quality, c the specific heat of steam (0.48 for low degrees of superheat and pressure), t temperature of steam as it enters calorimeter, T temperature of superheated steam as it leaves calorimeter, and R the radiation expressed in B.T.U.

The instrument consists of a soapstone cylinder about 3 by 4 inches, containing numerous holes in each of which is inserted a coil of German silver wire which constitutes the electric heater. The soapstone cylinder is inserted in a brass case with suitable connections for steam, the electric current, steam gauge and thermometers for the entering and leaving steam. The discharge steam flows through an orifice and its weight W is obtained by Napier's rule as explained on page 434 for the separating calorimeter. The electrical energy E is measured by suitable instruments as a wattmeter or a potentiometer, r is obtained from steam tables, and the temperatures are measured. The radiation R, which is very small, can be determined by supplying the instrument with steam of a slight degree of superheat.

328. The Throttling Calorimeter.— This instrument was designed in 1888 by Prof. C. H. Peabody of Boston, and rep-

resents a greater advance than any previously made in practical calorimetry. The equations for its use and limitations of the same were given by Prof. Peabody in Vol. IX., Transactions Am. Society Mechanical Engineers. As designed originally, it consisted of a small vessel four inches in diameter by six to eight inches long, and connected to the steam-supply with a pipe containing a valve, *b*, used to throttle the steam supplied the calorimeter. Fig. 199 shows the original form of the calorimeter, which is arranged so that any desired pressure less than that in the main steam-pipe can be maintained in the calorimeter *A*. The pressure in the calorimeter is shown by a steam-gauge at *g*, and the temperature by a thermometer at *D*; the main steam-pipe is provided with a drip at *f*, to drain the pipe before making calorimetric tests.

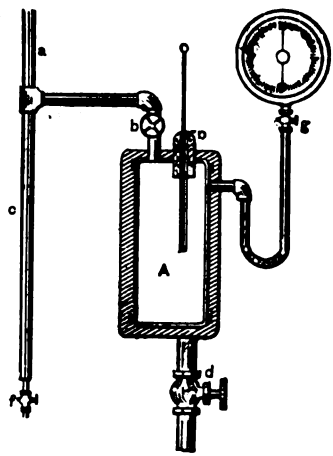

FIG. 199.—PEABODY'S THROTTLING CALORIMETER.

In using the calorimeter, any desired pressure can be maintained in the vessel *A* by regulating the opening of the admission and exhaust valves.

The effect of this operation will be to admit the heat due to high-pressure steam into a vessel filled with steam of lower pressure. The excess of heat is utilized firstly in evaporating moisture in the original steam; secondly, if there is sufficient heat remaining, in raising the temperature in the vessel *A* above that due to its pressure, thus superheating the steam. Unless the steam in the chamber *A* is superheated, no determinations can be made with the instrument. The equation for its use is obtained as follows: the heat in one pound of high-pressure steam before reaching the calorimeter is expressed as in formula (2), Article 311, page 393, by $xr + q$. After reaching the calorimeter the heat is that due to the press-

ure in the calorimeter added to that due to the superheat, or $\lambda_c + 0.48(T_1 - T_c)$. Since these quantities are equal,

$$xr + q = \lambda_c + 0.48(T_1 - T_c);$$

from which

$$x = [\lambda_c - q + 0.48(T_1 - T_c)] \div r; \quad . \quad . \quad . \quad (11)$$

in which r equals latent heat, and q heat of liquid due to pressure in main pipe as given in the steam-table.

λ_c = total heat in one pound of dry steam at calorimeter pressure; T_1 = reading of thermometer in calorimeter, and T_c = normal temperature of steam in calorimeter due to calorimeter pressure. Care must be taken that both λ_c and q are given in the same units.

Example.—Suppose that the gauge pressure on the main steam-pipe is 80 pounds, that on the calorimeter 8 pounds atmospheric pressure 14 pounds, as reduced from the barometer-reading, and that the thermometer in the calorimeter reads 274°.2 F. Required the quality of the steam.

In this case we obtain the following quantities from the steam-table:

	p Absolute Pressure.	T Temperature Deg. F.	q Heat of Liquid, B. T. U.	λ Total Heat, B. T. U.	r Latent Heat, B. T. U.
Entering steam.....	94	323.1	293.2	....	887.3
In calorimeter... ..	22	233.1	202.0	1153.0	951.0

From which

$$x = [1153 - 293.2 + 0.48(274.2 - 233.1)] \div 887.3;$$
$$x = 99.1.$$

Per cent of moisture, $100 - x = 0.9$.

329. Recent Forms of Throttling Calorimeters.—These instruments differ from Peabody's principally in size and form. They all work in the same general manner and detailed descriptions are hardly necessary.

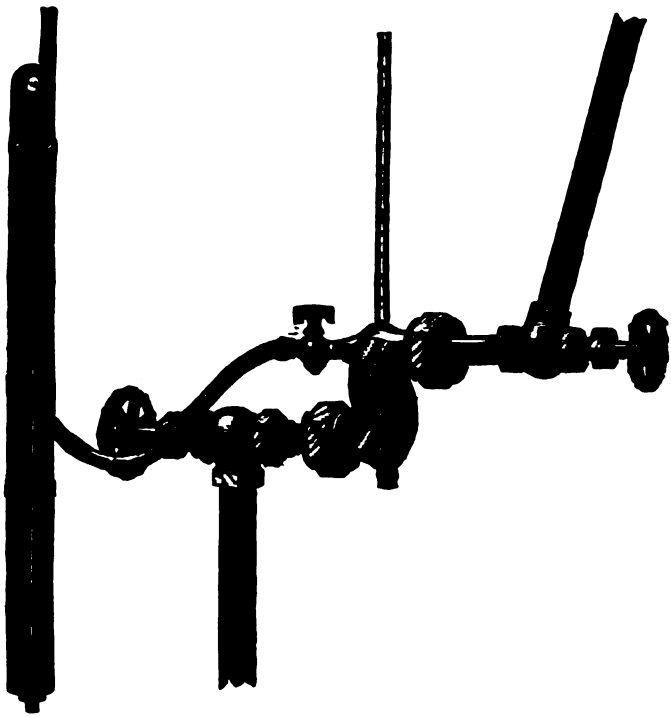

FIG. 200.—HEISLER'S THROTTLING CALORIMETER.

Heisler's throttling calorimeter is shown in Fig. 200, with attached manometer for measuring the pressure in the calorimeter chamber, it is of small size and keeps the current of steam intimately in contact with the thermometer.

Carpenter's throttling calorimeter, shown in Fig. 201, is provided with an attached nozzle for spraying the sample of steam over the themometer-bulb. The instrument may be used with or without a thermometer-cup, but in every case the thermometer must be deeply immersed in the steam. This instrument is made by Schaffer and Budenberg, New York.

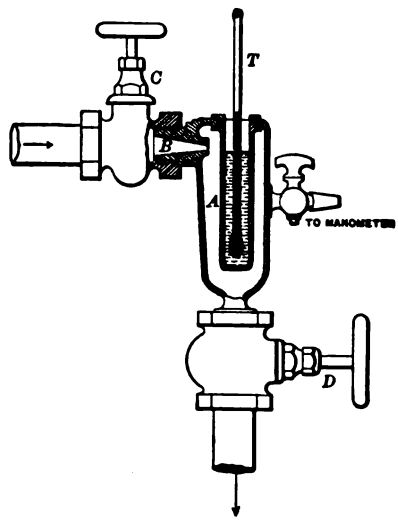

FIG. 201.—CARPENTER'S CALORIMETER.

Throttling Calorimeter of Pipe-fittings.—A very satisfactory calorimeter can be made of pipe-fittings, as shown

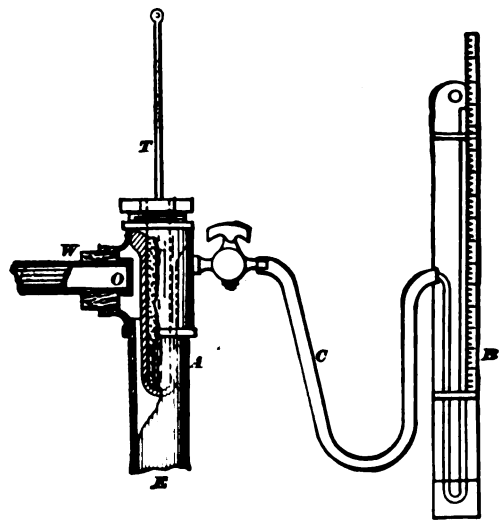

FIG. 202.—THROTTLING CALORIMETER OF PIPE-FITTINGS.

in Fig. 202. Connection is made to the main steam-pipe, as explained already elsewhere. The calorimeter is made

of ¾ inch fittings arranged as shown; the steam-pipe *W* is of ½-inch pipe, and the throttling orifice is made by screwing on a cap, in which is drilled a hole ⅛ or $\frac{1}{16}$ inch in diameter.

A thermometer-cup, Fig. 190, page 400, is screwed into the top, and an air-cock inserted opposite the supply of steam. A manometer, *B*, for measuring the pressure is attached by a piece of rubber tubing as shown. The exhaust steam is discharged at *E*. The back-pressure on the calorimeter can be increased any desired amount by a valve on the exhaust-pipe; when no valve is used the pressure is so nearly atmospheric that a manometer is seldom required.

Method of finding Normal Temperature in the Calorimeter.—It is essential to know the normal temperature within the calorimeter; this will vary with the pressure on the calorimeter, which pressure is equal to the barometer-reading plus the manometer-reading.

The following table gives the normal temperature corre-

TABLE OF BOILING-POINTS.

Normal Temperature. Degrees F.	Total Pressure on Calorimeter. Inches Hg.	Normal Temperature. Degrees F.	Total Pressure on Calorimeter. Inches Hg.
209.5	28.466	.7	.744
.6	.523	.8	.803
.7	.580	.9	.863
.8	.637	212.0	.922
.9	.695	.1	.982
210.0	.752	.2	30.041
.1	.810	.3	.101
.2	.867	.4	.161
.3	.925	.5	.221
.4	.983	.6	.281
.5	29.041	.7	.341
.6	.099	.8	.401
.7	.157	.9	.462
.8	.215	213.0	.522
.9	.274	.8	31.004
211.0	.332	214.0	.107
.1	.391	215.0	.692
.2	.449	216.0	32.277
.3	.508	217.0	.862
.4	.567	218.0	33.447
.5	.626	219.0	34.032
.6	.685	220.0	.617

Difference 1° F = 0.585 inch. Difference 1 inch = 1°.709.

sponding to various absolute pressures nearly atmospheric, expressed in inches of mercury:

In the use of the instrument the total pressure in the calorimeter is to be taken as the sum of the barometer-reading and the attached manometer. The degree of superheat of the steam in the calorimeter is the difference between the temperature as shown by the pressure and that shown by the inserted thermometer.

Graphical Solution for Throttling-Calorimeter Determinations.—In the practical use of this instrument it is customary to exhaust at atmospheric pressure, so that the normal temperature in the calorimeter is the boiling-point at atmospheric pressure, and λ_e is 1146.6; in which case formula (11) becomes

$$x = \frac{1146.6 + 0.48(T_1 - 212) - q}{r}$$

$$= \frac{1146.6 - q}{r} + \frac{0.48(T_1 - 212)}{r}.$$

If in this form we suppose the steam-pressure constant, and the degree of superheat and quality of steam alone to vary, r and q will both be constant, and we shall have the equation of a right line, in which $\frac{1146.6 - q}{r}$ is the distance above the origin that the line cuts the axis of ordinates, and $0.48 \div r$ is the tangent of the angle that the line makes with the axis of abscissæ. Drawing lines corresponding to the different gauge or absolute pressures, a chart may be formed from which the values of x may be obtained without calculation.

Using degrees of superheat in the calorimeter as abscissæ and absolute steam-pressure as ordinates, and drawing lines corresponding to various percentages of moisture, we have a diagram shown in Fig. 203, from which the results of observations made with the throttling calorimeter may be taken at once without further calculation.

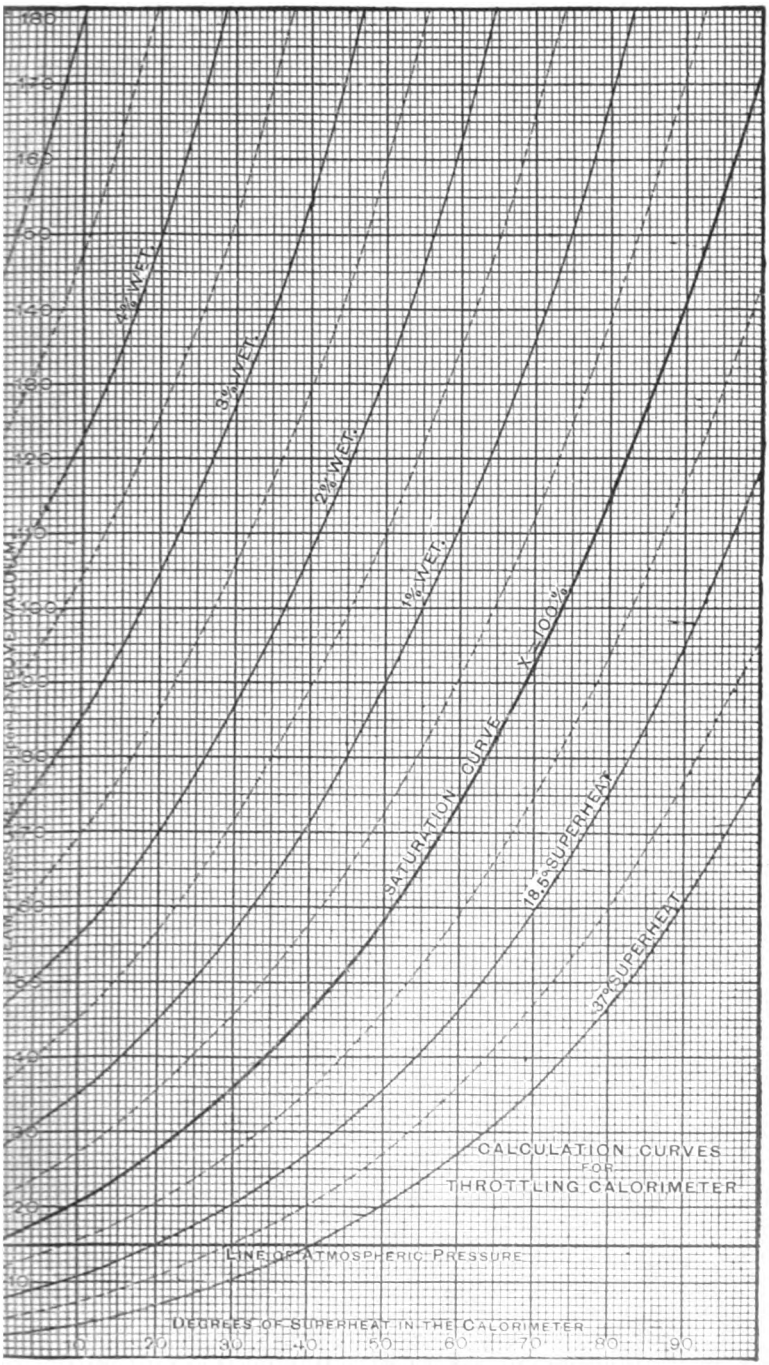

FIG. 203.—DIAGRAM GIVING RESULTS FROM THROTTLING CALORIMETER WITHOUT COMPUTATION.

Use of the Diagram.—To find the percentage of moisture in the steam from the diagram, pass in a horizontal direction along the base-line until you arrive at the number corresponding to the degree of superheat in the calorimeter; then pass in a vertical direction until you reach the required absolute pressure of steam. The position with reference to the curved lines shows at once the percentage of moisture, and can be read easily to one tenth of one per cent. Thus, for example, suppose that we have the following readings: Barometer, 29.8 inches; attached manometer, 1.5 inches—making a total pressure in the calorimeter of 31.3 inches, corresponding to a temperature of 214°.27 Fahr. Steam-gauge, 80 pounds; absolute pressure, 94.7 pounds; thermometer-reading in calorimeter, 254° Fahr. From which the degree of superheat is found to be $254° - 214°.27 = 39°.73$.

Following the directions as given, the percentage of moisture is seen from the diagram to be 1.66 per cent. The quality would be $1.00 - 1.66 = 98.34$ per cent. While the diagram is especially computed for determinations when the pressure in the calorimeter is atmospheric or but slightly above, it will be found to give quite accurate results when the calorimeter is under pressure, by considering that the ordinates represent the difference of pressures on the steam and in the calorimeter. Thus, in the example, Article 328, page 390, the steam-pressure was 80 pounds, calorimeter-pressure 8 pounds; degree of superheat $274.2 - 233.1 = 41.1$; resulting quality by calculation 99.1, indicating 0.9 per cent of moisture. Using difference of pressure $80 - 8 = 72$ as ordinate, and 41.1 as abscissa, we find from the chart that the percentage of moisture is 0.92; from which $x = 99.08$.

The results for the throttling calorimeter may be computed from the temperatures instead of the pressure of the original sample of steam as compared with the temperature in the calorimeter when at atmospheric pressure. Carpenter's calorimeter, Fig. 201, is especially adapted for such determinations, since it provides an easy method of calibrating the thermometer when in position. This is especially important since thermometers will ordinarily read two or three degrees low when there is a portion of the stem exposed.

For using the instrument in this manner, the boiling-point in the calorimeter is first determined by opening both the supply and discharge valves C and D and showering the instrument and connections with water until the steam in the calorimeter is moist, in which case the reading of the thermometer will be that due to the boiling-point. Second, close the discharge-valve with the supply-valve open and obtain full boiler pressure in the calorimeter; when the thermometer has become stationary note the temperature: this will be the boiling-temperature for the given pressure as read by the given thermometer. Third, open the discharge-valve of the instrument, and after the mercury has become stationary note the reading of the thermometer. Deduct from this latter reading the reading first taken and we shall have the degree of superheat in the calorimeter. From these two numbers the quality may be computed by reference to steam tables as explained, but it is more easily done by reference to the following diagram, in which the temperature of the steam is the ordinate and is that given when the discharge-valve is closed, and the temperature in the calorimeter is the abscissa, on the supposition that the boiling-temperature at calorimeter pressure is 212 degrees. If the boiling-temperature is more or less than this amount, a corresponding correction must be made to the result. As an illustration, suppose that the boiling-temperature in the calorimeter is 211 or one degree low, that the actual temperature in the calorimeter when both valves are open is 265, and that the temperature of the steam obtained with the discharge-valve closed is 320. To find the quality we look in the line over 266 and opposite 330, and read the results by the diagonal lines, the quality as shown on the diagram being 98.8 (see Fig. 204).

Limits of the Throttling Calorimeter. — To determine the amount of moisture that can be evaporated by throttling, make $T_1 = T_c$ in formula (11); then

$$x = (\lambda_c - q) \div r. \quad . \quad . \quad . \quad . \quad . \quad . \quad (12)$$

The amount of moisture that can be determined by the

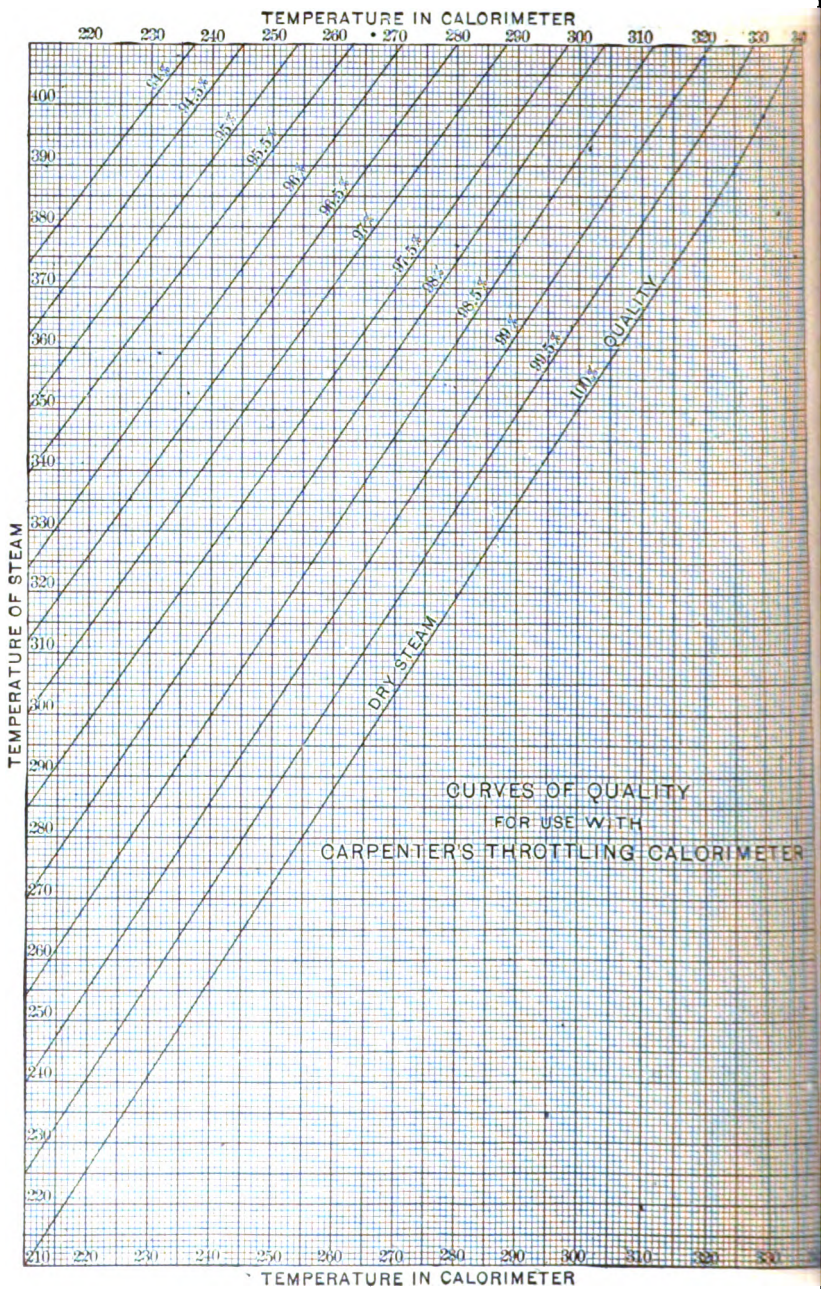

FIG. 203.—DIAGRAM FOR COMPUTING RESULTS WITH THROTTLING CALORIMETER.

throttling calorimeter in expanding from the given pressure to atmospheric, as computed by substituting in formula (12), is as follows:

LIMITS OF THE THROTTLING CALORIMETER.

Pressure, pounds per square in.		Maximum per cent of priming.	Quality of the steam, per cent.
Absolute.	Gauge.		
300	285.3	07.7	92.3
250	235.3	7.0	93.0
200	185.3	6.1	93.9
175	160.3	5.8	94.2
150	135.3	5.2	94.8
125	110.3	4.6	95.4
100	85.3	4.0	96.0
75	60.3	3.2	96.8
50	35.3	2.3	97.7

By reducing the pressure below the atmosphere, the limits of the instrument may be somewhat increased.

Directions for Use of Throttling Calorimeter. — *Apparatus.*—Steam-thermometer; pressure-gauge; manometer for measuring pressure in calorimeter in inches of mercury.

1. Attach the calorimeter to a perforated pipe extending well into the main steam-pipe to secure a fair sample of steam. Calibrate all the apparatus.

2. Fill thermometer-cup with cylinder-oil, having first carefully removed any moisture from the cup. Place thermometer in the cup, and after it has reached its maximum commence to take observations.

3. Read steam-pressure, attached manometer, and temperature at frequent intervals.

4. Compute the quality of the steam for each observation.

Forms for Throttling-Calorimeter Determinations.

Priming tests of.....

Made by.....

at....., N. Y., ...189....

with.....Throttling Calorimeter.

Barometer-reading .....inches. Steam used during run.....lbs.

Quality of steam $x = \frac{\lambda - q + 0.48(t_1 - t_c)}{r}$.

Degrees superheat $D = \left(\frac{x-1}{0.48}\right) r$.

	Number.....	1	2	3	4	5	6	7	8	9
	Time.....									
θ	Steam-pressure, main pipe.....									
m	Manometer reading calorimeter.....									
t_1	Observed temperature calorimeter.....									
q	Heat at steam-pressure P.									
t_c	Normal temperature in calorimeter.....									
P	Absolute pressure in main.....									
$0.48(t-t')$	.....									
λ_c	Total heat, pressure m...									
r	Latent heat for pressure P.....									
$\lambda_c - q$	.....									
	$\lambda_c - q + 0.48(t_1 - t_c)$.....									
$1 - x$	Per cent of entrained water.....									
x	Quality of steam.....									
D	Degrees of superheat...									

AVERAGE RESULTS OF CALORIMETER TEST.

Date.....

Duration of test.....min.

Barometer.....in.; .....lbs. per sq. in.

Boiler-pressure by gauge..... " "

" " absolute..... " "

Calorimeter-pressure by gauge ..... " "

" " absolute..... " "

Calorimeter-temperature.....C.; .....F.

Per cent of moisture in steam.....

Signed .....

336. The Separating Calorimeter. — The separating calorimeter is an instrument which removes all water from the sample of steam by some process of mechanical separation, and provides a method of determining the amount of water so removed and also the weight of the sample. This process is dependent upon the greater density of water as compared with that of steam. Thus, for instance, steam at 100 lbs. absolute pressure is more than 260 times lighter than water at the same temperature, and if the sample of steam when moving with considerable velocity can be made to change its direction of motion abruptly, the water will be deposited by the action of inertia.

The accuracy of this instrument depends on the possibility of completely separating the water from the steam by mechanical methods. To determine this a series of tests were conducted for the author by Messrs. Brill and Meeker with steam of varying degrees of quality. The range in moisture was from 33 to 1 per cent, yet in every case the throttling calorimeter attached to the exhaust gave dry steam within limits of error of observation. The following were the results of this examination.

SEPARATING CALORIMETER.

Observations on Entering Steam.						Examination of Exhaust Steam from Calorimeter by Throttling Calorimeter.		
	T	*P*	*W*	*w*	*x*	*t*	*x*	
Calorimeter.	Duration Run, minutes.	Gauge Pressure, pounds.	Pounds Separated Water in Run.	Pounds Condensed Steam in Run.	Quality Steam, per cent.	Temp. in Calorimeter.	Quality Steam in Exhaust.	No. of Observations.
A	25	81.5	1.15	4.45	79.46	281	99.95	6
B	25	78.2	0.15	5.20	97.2	281.3	100.00	6
A	25	80.8	0.525	4.25	89.005	286.5	100.00	6
B	25	79.5	0.150	4.75	96.94	281.8	99.95	6
A	25	78.5	0.300	5.000	94.34	282.8	100.00	6
B	25	77.6	.150	5.45	97.32	282.3	100.00	6
A	24	79.5	1.8	4.55	71.65	280.1	99.94	6
B	24	78.5	1.4	4.90	77.77	279.5	99.9	6
A	20	83.5	1.15	4.1	77.67	286.5	100.00	5
B	20	81.6	1.70	4.75	73.64	282.7	99.98	5
	20	74.8	0.65	3.95	85.87	283.7	100.05	5
	20	82.0	0.85	3.95	82.29	286.8	100.05	5
	20	82.6	0.35	4.15	92.22	285.6	100.0	5
	20	81.5	0.20	3.95	95.15	285.2	100.05	5
A	20	81.4	2.20	4.325	66.28	283.1	100.0	5
B	20	80.3	0.30	4.55	93.81	282.8	100.0	5
A	20	82.0	0.20	4.65	95.8	282.8	99.98	5
B	20	81.1	0.20	4.40	95.7	284.0	100.0	5
Average of 18 trials, involving 98 observations.....							99.998	

This experiment indicates that the complete separation of moisture from steam is possible by mechanial means.

Any radiation in the instrument will increase the apparent moisture in the steam, and must also receive consideration, especially if it be sufficient in amount to sensibly affect the results.

337. Description of Various Forms.—The earliest form of separating calorimeter used in experimental work, in the Sibley College laboratory, consisted of a vessel with an interior

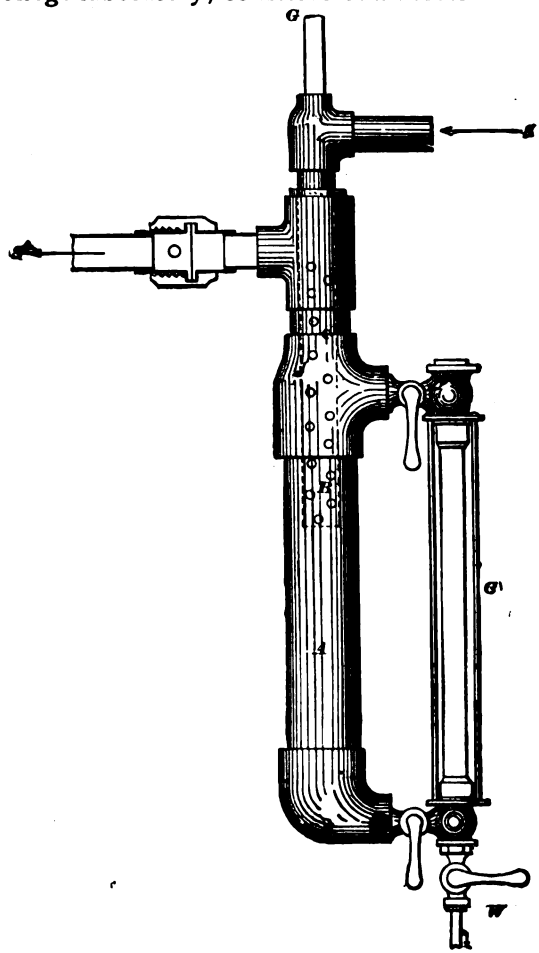

FIG. 205.—THE SEPARATOR CALORIMETER.

nozzle, extending below the outlet and so arranged that the current of steam would abruptly change direction and deposit the moisture into the bottom portion of the vessel. The dry steam was allowed to escape near the top. Fig. 205 shows

a form, used in the early experiments, which was constructed of pipe-fittings.

This instrument, even when covered with hair felt, gave off sufficient amount of heat to sensibly affect the results, and a correction for radiation was essential. The amount of radiation was determined by using two instruments of the same kind and size, arranged so that the discharge from one was the supply to the other.

The second instrument receives perfectly dry steam from the first, the water deposited is due to the radiation loss, which, being the same in both instruments, provides a method of determining its amount. In figuring the percentage of moisture, the amount thrown down by radiation in the second instrument is to be deducted from the total amount caught in the first calorimeter.

In later forms of the instrument the amount of radiating surface has been made so small as to render the correction for radiation, in all ordinary cases, negligible, by constructing the instrument in such a manner as to be jacketed by steam of the same pressure and temperature as in the sample. The form of this instrument is shown in Fig. 207, in which the steam is supplied through the pipe D, the moisture being received in the interior vessel E, the discharge steam passing out of the chamber E at the top, into the jacket F, and thence out of the instrument through a small opening at L; the opening at L being made sufficiently small to maintain the pressure in the jacket the same as that in the sample. The discharged steam is then condensed in a can, J. This can is provided with a small top in which is set a gauge-glass with attached scale, graduated so as to read to pounds and tenths of pounds of water. A gauge-glass N attached to the calorimeter is provided with index, mn, arranged to move over a graduated scale, S, which shows the weight of water in the vessel E in pounds and hundredths. In using this instrument the condensing can J is filled with water to the zero-point of the scale. The amount of condensed steam is

read on the scale of the can, J; the amount of water in the sample of steam for the same time is read on the scale S. The percentage of moisture, in case radiation is neglected, is the quotient of the reading of the calorimeter scale S divided by the sum of the readings on both scales.

The latest form of the instrument is shown complete with all accessories in Fig. 206, and is a great improvement over the earlier forms in points of portability and convenience. It differs principally from the form last described in the construction of the steam-separating device, which has been increased in efficiency and in the substitution of a gauge attached to the outer jacket, which registers the total flow of steam through the instrument in ten minutes of time.

The flow of steam through a given orifice is proportional to the absolute steam-pressure, by Napier's law* which has been proved correct for pressures above 25 pounds absolute; and hence it is possible to calibrate by trial a pressure-gauge in such a manner that the graduations will show the flow of steam in a given time. The only error which is produced in this graduation is that due to changes in barometric pressure, which is never sufficient to sensibly affect the results obtained in the use of the instrument. Should any doubt arise, the accuracy of the readings of the gauge are easily verified by condensing the discharged steam for a given period of time. This should be done occasionally to test the gaduations.

The instrument may be described as follows: It consists of two vessels, one being interior to the other; the outer vessel surrounds the interior one so as to leave a space which answers for a steam-jacket. The interior vessel is provided with a water-gauge glass 10 and a graduated scale 12. The sample of steam whose quality is to be determined is supplied through the pipe 6 into the upper portion of the interior vessel. The water in the steam is thrown downward into

* See Transactions American Society Mechanical Engineers, Vol. XI. 1887, paper by Prof. C. H. Peabody.

the cup 14, together with more or less of the steam; the course of the steam and water is then changed through an angle of nearly 180 degrees, which causes the entire amount of water to be thrown outward through the meshes in the cup into the space 3, which constitutes the inner chamber. The cup serves to prevent the current of steam from taking up any moisture which has already been thrown out by the force of inertia. The meshes or fins project upward into the inside of the cup, so that any water intercepted will drip into the chamber 3. The steam then passes upward, and enters the top of the outside chamber. It is discharged from the bottom of the outside chamber through an orifice 8 of known area, which is much smaller than any section of the passages through the calorimeter, so that the steam in the outer chamber suffers no sensible reduction in pressure. The pressure in the outer chamber, being the same as in the interior, has the same temperature, and consequently no loss by radiation can take place from the interior chamber except that which takes place from the exposed surface of the gauge-glass and fittings. The pressure in the outer chamber, and also the flow of steam in a given time, is shown by suitably engraved scales on the attached gauge. The scale for showing the flow of steam is the outer one on the gauge, and is graduated by trial, and gives the discharge of steam in pounds in ten minutes of time. The readings on the scale 12 show the weight of water in the interior vessel 3, and should be taken at the beginning and end of the interval.

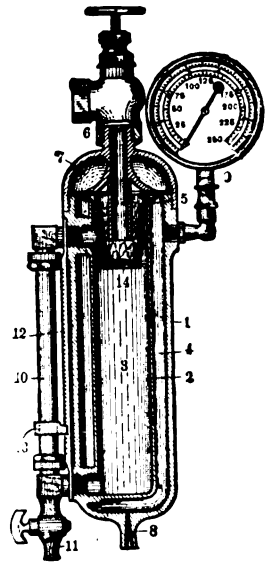

FIG. 206.—IMPROVED SEPARATING CALORIMETER.

The total size of the instrument is about 12 × 2½ inches, and its weight about 8 pounds.

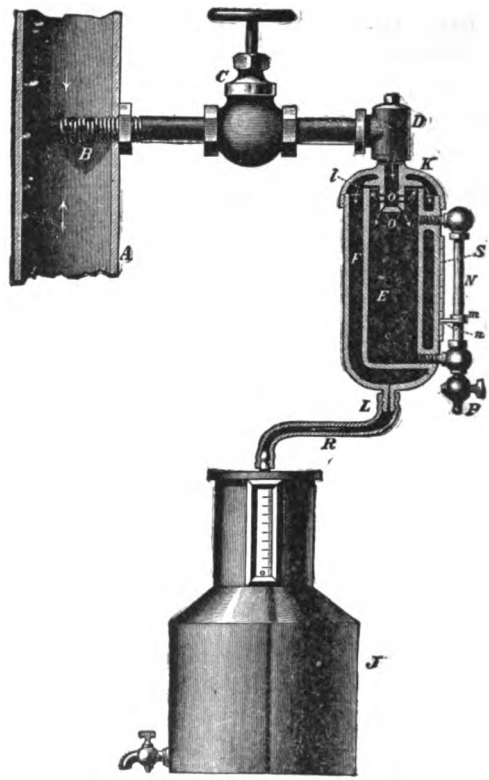

FIG. 207.—SEPARATING CALORIMETER WITH CONDENSING CAN.

338. Formula for Use of the Separating Calorimeter.—Let w equal the weight of dry steam discharged at the exhaust-orifice, W the water drawn from the separator, R the water thrown down during the run by radiation. Then the quality of the steam is

$$x = \frac{w + R}{W + w};$$

the amount of moisture

$$1 - x = \frac{w - R}{W + w}.$$

To reduce the radiation loss as much as possible the instrument should be thoroughly covered with hair felt to the thickness of 1/2 to 3/4 inch. In this case the total loss by radiation will be about 0.4 B. T. U.* per square foot per hour for each degree difference of temperature between the steam and the surrounding air. This will amount to about 220 B. T. U. per square foot per hour, or about 1/5 of a pound of steam under usual conditions of pressure and temperature. In the instrument described the actual exposed surface amounts to about 1/12 sq. ft., so that the condensation loss may be considered as from 1/50 to 1/60 of a pound of steam per hour. The total flow of steam through the instrument usually varies from 40 to 60 lbs. of steam per hour, so that if the instrument is covered, the radiation loss would be less than 1/20 of one per cent. If the instrument be not covered, the loss would be about five times this amount, or under usual conditions about 1/5 of one per cent.

The radiation loss can in every case be determined by using steam of known quality as determined by the throttling calorimeter, or better still by arranging two separating calorimeters of exactly the same size in series so that the steam exhausted from the first is used as a supply to the second in a manner already explained.

The Limits of the Instrument.—The instrument will give correct determinations with any amount of moisture that the sample of steam may contain. With steam containing a very small amount of moisture, the radiation loss will have more effect than with steam containing a great amount. When the fact is considered, however, that a sample of steam cannot probably be obtained but what differs more than 1/2 per cent from the average, the futility of making this correction becomes at once apparent.

339. **General Method of Using.**—The general method of using is given only for the latest instrument described, which

* See numerous experiments, Carpenter's Heating and Ventilation (N. Y., J. Wiley & Sons), Chapter IV.

is briefly as follows: First, attach the instrument to a pipe leading to the main steam-pipe as already explained, and so as to obtain the fairest sample of steam.

Second, wrap the instrument and connections thoroughly with hair felt, to prevent loss of heat by radiation, leaving only the scales visible.

Third, permit the steam to blow through the instrument until it is thoroughly heated, before making any determinations.

Fourth, take the initial and final readings on the scale 12 at beginning and end of a period of ten minutes of time and note the average position of the hand on the gauge-dial during this time. The pressure should be kept as nearly constant as possible during the period of discharge, in which case this hand will remain constant.

Fifth, compute the percentage of moisture as explained by dividing the reading on the scale 12 by the sum of the readings on scale 12 and the gauge-dial.

Attention is again called to the difficulty of obtaining an average sample of steam for the calorimetric determination. The principal cause of this difficulty is due to the great difference in specific gravity of water and steam, as, for example, at a pressure of 100 pounds absolute per square inch a cubic foot of steam weighs 0.23 pound; a cubic foot of water at the corresponding temperature weighs about 56 pounds, or more than 225 times as much. If any great amount of water is contained in the steam, it is likely, if moving in a horizontal pipe, to be concentrated on the bottom; if moving downward in a vertical pipe, to fall under the influence of gravity and inertia; if moving upward in a vertical pipe, it tends to remain at the bottom until absorbed or taken up by the current of steam. The amount of water by weight that will be absorbed as a mist or fog and carried by the steam is not definitely known, but it depends in a large measure on the velocity of flow.

Because of the great difference in weight of water and steam nearly all the water can be deposited from a current of steam,

in a vessel or reservoir conveniently connected to the steam-pipe, by action of gravity or inertia. Such a device is known commercially as a *steam-separator*. The water is removed from the separator either by an automatically controlled pump or trap or by hand.

In the determination of quality it is desirable to remove the free water by a steam-separator before making the connection to obtain the sample, as in that case the sample is more likely to be an average one. See papers on this subject in the Transactions of Am. Soc. Mechanical Engineers, Vol. XIII, by Prof. D. S. Jacobus, and Vol. XII, by the author.

MECHANICAL LABORATORY, SIBLEY COLLEGE, CORNELL UNIVERSITY.

PRIMING TEST WITH SEPARATOR CALORIMETER.

Made by..... 189..

Test of..... Steam..... ...

at..... N. Y.

No. of Run.	Duration of Run.	Gauge Pressure.	Absolute Pressure.	Weight of Exhaust.	Weight of Water.	Total Weight of Steam.	Radiation-loss.	Moisture.	Quality.
	min.	lbs.	P lbs.	w lbs.	W lbs.	$W+w$ lbs.	R lbs.	$1-X$ per ct.	X per ct.
1									
2									
3									
4									
5									
6									
7									
8									
9									
10									

Diameter of orifice..... in. Area of orifice.....sq. in. Symbol A.
Barometer-reading.....in.
Formula of instrument, $1 - x = (W - R) + (W + w)$.
Napier's Rule, Flow of Steam, pounds per second $= \frac{1}{70} PA$.
Method of determining R.....
Results.....
.....
Method of determining W.....

341. The Chemical Calorimeter.—This instrument depends on the fact that certain soluble salts will not be absorbed by dry steam, but will be carried over by water, so that if the salt appears in the steam its presence indicates water.

Various salts have been used, but common salt, *chloride of sodium*, gives as good results as any.

The proportion that the salt in a given weight of condensed steam bears to that in a given weight of water drawn from the boiler, is the percentage of moisture in the steam. The method of analysis is a volumetric one, and is as follows:

Add three or four ounces of common salt to the water in the boiler; after it is dissolved, draw from the boiler a small amount of water and condense an equal weight of steam, which are to be kept in separate vessels. Add to each of them a few drops of neutral chromate of potash, but in each case an equal quantity, which amount may be measured by a pipette; the same amount should also be added to a vessel containing an equal weight of distilled water, in order to obtain a standard or zero-point for the scale used in the analysis.

By means of a graduated pipette a triturated solution of nitrate of silver is permitted to flow, a single drop at a time, into each of the three solutions. The effect is to cause the formation of the chloride of silver, and until that formation completely takes place the resulting liquid will be whitish or milky; but because of the presence of the bichromate, the instant the chloride has all been precipitated the liquid turns red. The amount of nitrate of silver required is measured by the graduated pipette, and gives the information regarding the salt present.

The detailed directions for the test are as follows:

Take in each case 100 cubic centimeters of liquid containing a few drops of neutral chromate of potassium, and drop from a triturated solution holding 10.8 grams of silver to the liter; the following data were obtained in a test:

AMOUNT OF NITRATE OF SILVER REQUIRED TO TURN 100 C. C. RED.

100 c. c. of	First Trial.	Second Trial.	Third Trial.	
Condensed steam.....	0.1 c. c.	0.05 c. c.	0.1 c. c.	*a*
Water from the boiler.....	13 6 c. c.	14.0 c. c.	13.35 c. c.	*b*
Distilled water.....	0.05 c. c.	0.05 c. c.	0.05 c. c.	*c*

Letting the results witn these three samples be denoted by a, b, and c respectively, and the amount of moisture by $1 - x$, we have

$$1 - x = \frac{a - c}{b - c}.$$

This gives the following results:

	First Trial.	Second Trial.	Third Trial.
Amount moisture.....	$\frac{0.1 - 0.05}{13.6 - .05} = .0037$	$\frac{0.05 - 0.05}{14.0 - 0.05} = 0$	$\frac{0.1 - 0.05}{13.35 - 0.05} = .00375$

Average = 0.0025.

This method is evidently applicable only in determining the amount of moisture in the steam as it leaves the boiler, and will give no information regarding the additional moisture that may be added to the steam by condensation.

Instead of common salt, sulphate of soda is sometimes used, and the percentage of moisture determined by the percentage of sulphuric acid present in the steam as compared with that in water from the boiler.

342. Comparative Value of Calorimeters.—These instruments, arranged in order of accuracy, are no doubt as follows:

throttling; separating; Barrus superheating; Hoadley; continuous condensing; chemical; and lastly the barrel.

The ease with which the throttling and separating instruments can be used, their small bulk, and great accuracy, render them of chief practical importance.

The throttling calorimeter can be used only for steam with a small amount of moisture, as explained in Article 333; but the separating instrument is not limited by the amount of moisture entrained in the steam. It is not, however, as well adapted for superheated steam, nor can the results be determined as quickly as with the throttling instrument; when carefully handled the accuracy is, however, substantially the same.

CHAPTER XIV.

DETERMINATION OF THE HEATING VALUE OF FUELS—FLUE-GAS ANALYSIS.

343. Combustion.—Combustion or burning is a rapid chemical combination. The only kind of combustion which is used to produce heat for engineering purposes is the combination of fuel of different kinds with oxygen. In the ordinary sense the word *combustible* implies a capacity of combining rapidly with oxygen so as to produce heat. The chief elementary constituents of ordinary fuel are carbon and hydrogen. Sulphur is another combustible constituent of ordinary fuel, but its quantity and its heat-producing power are so small that it is of no appreciable value.

The *chemical elements* are those which have not been decomposed; these unite with each other in various definite proportions, which may be represented by certain numbers termed *chemical equivalents* or *atomic weights*. These for gaseous bodies are very nearly proportional to their densities at the same pressure and temperature.

The *atomic weight* of a chemical compound equals the sum of the atomic weights of all the elements entering into the combination. Air is not a chemical compound, but a mechanical mixture of nitrogen and oxygen.

The following table gives the properties of the principal elementary and compound substances that enter into the composition of ordinary fuels:

Substance.	Symbol.	Chemical Equivalent by Weight.	Chemical Equivalent by Volume.	Properties of Elements by Volume.
Oxygen	O	16	1	
Nitrogen	N	14	1	
Hydrogen	H	1	1	
Carbon	C	12	?	
Phosphorus	P	31		
Sulphur	S	32	?	
Silicon	Si	14		
Air	$77N + 23O$	100	100	$79N + 21O$
Water	H_2O	18	2	$H + O$
Ammonia	NH_3	17	2	$H + N$
Carbonic oxide	CO	28	2	$C + O$
Carbonic acid	CO_2	44	2	$C + O_2$
Olefiant gas	CH_2	14	2	$C + H_2$
Marsh gas	CH_4	16	2	$C + H_4$
Sulphurous acid	SO_2	64	2	$S + O_2$
Sulphuretted hydrogen	SH_2	34	2	$S + H_2$
Bisulphuret of carbon	S_2C	76	2	$C + S_2$

344. Calorific Power or Heat of Combustion.—The calorific value of a fuel is expressed in *British thermal units* or in *calories*, according as Fahrenheit or Centigrade thermometric scales are used. The calorific value may be determined by direct experiment, or it may be computed from a chemical analysis as follows:

The carbon is credited with its full heating power, due to its complete oxidation as determined by a calorimeter experiment. The hydrogen is credited with its full heating power, after deducting sufficient to form water with the oxygen present in the compound; since when hydrogen and oxygen exist in a compound in the proper proportion to form water, the combination of these constituents has no effect on the total heat of combustion.

The calorimetric value, determined experimentally, of one pound of hydrogen is 62,032 B. T. U.; that of one pound of carbon, 14,500 B. T. U. Hence the combustion of one pound of hydrogen is equivalent to that of 4.28 pounds of carbon.

A formula for the total heat, h, of combustion in B. T. U.

for each pound of the compound containing hydrogen and carbon would be

$$h = 14{,}500\left[C + 4.28\left(H - \frac{O}{8}\right)\right]. \quad . \quad . \quad . \quad . \quad (1)$$

For theoretical evaporative power, in pounds of water from and at 212 F.,

$$E = \frac{h}{966} = 14.6\left[C + 4.28\left(H - \frac{O}{8}\right)\right]. \quad . \quad . \quad . \quad (2)$$

The number of pounds of air required to supply the oxygen necessary for the combustion of one pound of fuel to CO_2 can be computed from the formula

$$A = 12\left[C + 3\left(H - \frac{O}{8}\right)\right]; \quad . \quad . \quad . \quad . \quad . \quad (3)$$

and the corresponding volume in cubic feet can be found by multiplying by the specific volume of one pound at 70 degrees Fr. In which case the volume in cubic feet is

$$a = 149\left[C + 3\left(H - \frac{O}{8}\right)\right]. \quad . \quad . \quad . \quad . \quad (4)$$

In the above formulæ, C, H, and O represent the number of pounds respectively of carbon, hydrogen, and oxygen in the product of combustion.

When in the combustion of hydro-carbon fuels in an ordinary furnace hydrogen is consumed, the water formed passes off in the state of vapor, hence the latent heat of evaporation is not available. One pound of hydrogen burns to 9 pounds of water, the latent heat of which at 212° is 966 units; hence we must deduct $966 \times 9 = 8694$ units from the tabular value

of the heat due to the combustion of hydrogen. This leaves 53,338 units available. Therefore the actual value in terms of carbon is H = 3.67C, instead of 4.28C as stated in (1), and the heat of combustion actually available is

$$h = 14{,}500\left[C + 3.67\left(H - \frac{O}{8}\right)\right]. \quad . \quad . \quad . \quad . \quad (5)$$

The following table gives the heat of combustion of the principal combustible substances:

TOTAL HEAT OF COMBUSTION WITH OXYGEN.

Substance.	Pounds of Oxygen required per Pound of Combustible.	Pounds of Air required per Pound of Combustible (nearly).	Total Heat, B. T. U. per Pound.	Pounds of Water evaporated per Pound of Combustible from 212°.	Product of Combustion.
Hydrogen gas	8	36	62,032	62.6	H_2O
Carbon burned to CO	1.33	6	4,400	4.50	CO
Carbon burned to CO_2	2.67	12	14,450	14.67	CO_2
Olefiant gas	3.43	15.43	21,344	22.1	CO_2 and H_2O
Liquid hydro-carbon	.....	.....	19,000 21,700	20 22.5	" " "
Sulphur to SO_2	1	4.5	3,740	4.09	SO_2
Silicon to SiO_2	2.29	10.2	14,000	14.24	SiO_2
Phosphorus to P_2O_5	1.44	6.5	10,250	10.45	P_2O_5
Marsh gas, C_2H_4	3.55	16.2	26,400	26.68	CO_2 and H_2O
Crude petroleum	2.8	15.0	18,600	18.53	" " "
Oil of turpentine	.....	.....	19,200	19.73	" " "
Wax	.....	.....	18,800	19.04	" " "
Ether	.....	.....	16,100	16.41	" " "
Tallow	.....	.....	16,000	16.37	" " "
Alcohol	.....	.....	12,700	13.06	" " "
Methyl alcohol (wood-spirit)	.....	.....	9,200	9.65	" " "
Bisulphide of carbon, CS_2	1.28	5.7	5,750	6.18	CO_2 and SO_2
Carbonic oxide	1.33	6	10,100	10.4	CO_2

345. **Determination of the Heating Value by the Oxygen required.**—It was observed by Welter* that those

* Chemical Technology, Vol. I., p. 336: Graves and Thorp.

constituents of a compound which require an equal amount of oxygen for combustion evolve also equal quantities of heat; from which he concluded that since the oxygen required for the combustion of a body is in the same relation as the quantity of heat evolved, it might fairly be made the measure of the heating power. When, therefore, oxygen is consumed by the burning of carbon, wood, hydrogen, etc., the heat which is evolved must increase with the quantity that is consumed; or the same amount of heat is generated by a certain given weight of oxygen, whether that quantity be employed in converting carbon into carbonic acid, or hydrogen into water.

The oxygen required is $2\frac{2}{3}$ for one part of carbon; 8 for one part of hydrogen.

One part by weight of carbon will raise the temperature of 80.5 parts of water from freezing to boiling.

One part by weight of hydrogen will raise 234 parts of water from freezing to boiling.

One part by weight of oxygen in burning carbon will heat $\frac{80.5}{2\frac{2}{3}} = 29.1$ parts of water.

One part by weight of oxygen in burning hydrogen will heat $\frac{234}{8} = 29.3$ parts of water from the freezing to the boiling point.

In round numbers, therefore, the heating effect of oxygen may be assumed as sufficient to raise 29.2 parts of water from the freezing to the boiling point. This is equivalent to 2920 Centigrade heat-units, or to 5230 B. T. U.

Calorific Value.—The calorific value of the fuel would therefore be the product of this number by the number of parts of oxygen required. Thus let α equal the number of parts of oxygen required for each combustible; then the heat produced by the combustion is

$$h = 2920\alpha \quad \text{in Centigrade units;}$$
$$h = 5230\alpha \quad \text{in B. T. U.}$$

Thus, for example, in the combustion of carbon to CO_2,

$2\frac{2}{3}$ parts by weight of oxygen are required for each one of carbon; hence for this case $\alpha = 2\frac{2}{3}$, and

$$h = 5230 \times 2\tfrac{2}{3} = 14{,}100.$$

In the combustion of hydrogen to water 8 parts by weight of oxygen are required, and in this case $\alpha = 8$; hence

$$h = 5230 \times 8 = 41{,}840.$$

This is about two thirds of the actual value of the calorific power of hydrogen, but does not differ much from the heat available in ordinary combustion.

In case of a compound body, let a fuel contain a, b, c, and d parts by weight of different combustible ingredients; and let α, α_1, α_2, α_3 be the parts by weight of oxygen required by each. Then

$$h = 2920(a\alpha + b\alpha_1 + c\alpha_2 + d\alpha_3) \quad \text{in Centigrade units;}$$
$$= 5230(a\alpha + b\alpha_1 + c\alpha_2 + d\alpha_3) \quad \text{in Fahrenheit units.}$$

346. Temperature produced by Combustion.—In the determination of the calorific value of a fuel two principal factors are involved, namely, the calorific power, or the total amount of heat to be obtained from the perfect combustion of its constituents, and the calorific intensity, or the temperature attained by the gaseous products of combustion. The calorific power will be the same regardless of the method of combustion; that is, a unit of carbon or of hydrogen will give the same heat whether burned with the oxygen of the air or of a metallic oxide. The calorific intensity or temperature, however, will be greater as the volume of gases heated is less. Thus carbon burned to CO_2 will produce a much higher temperature when burned in oxygen gas than when in the air, since in the latter case it must heat an additional quantity of nitrogen equal to rather more than three times the weight of the oxygen.

The maximum temperature cannot be either computed or determined experimentally with complete accuracy, partly because the total combustion of a quantity of fuel in a given time at one operation is practically impossible, but more particularly from the fact that dissociation of gaseous compounds produced in burning takes place at temperatures far below those indicated as possible by calculation.

The maximum temperature is calculated as follows:

The value of one pound of carbon is 8080 Centigrade heat-units, or 14,500 B. T. U. The heat absorbed by any body is equal to the product of its weight, w, specific heat, s, and rise of temperature, t. Hence

$$wst = 8080, \quad \text{or} \quad t = 8080 \div ws, \text{ in Centigrade degrees,}$$

and

$$t = 14{,}550 \div ws, \text{ in Fahrenheit degrees.}$$

In the case of combustion of carbon to CO_2 in oxygen gas, the oxygen required for each part of carbon is $2\frac{2}{3}$ parts; the specific heat of CO_2 is 0.216. Hence the maximum temperature

$$\frac{8080}{3.67 \times 0.216} = 10{,}187^\circ \text{ C.},$$

or

$$\frac{14{,}550}{3.67 \times 0.216} = 18{,}367^\circ \text{ F.}$$

In case it is burned in air an additional weight of 8.88 pounds of nitrogen, with a specific heat of 0.24, must be raised to the temperature of combustion. Hence the maximum rise of temperature will be

$$\frac{8080}{3.67 \times 0.216 + 8.888 \times 0.24} = 2731^\circ \text{ C.} \quad \text{or} \quad 4860^\circ \text{ F.}$$

The maximum temperature to be attained by combustion of the following substances, as calculated by R. Bunsen, is:

Combustible.	In Oxygen.		In Air.	
Carbon	9873° C.	17,803° F.	2458° C.	4456° F.
Carbonic oxide	7067	12,752	3042	5507
Olefiant gas	9187	16,568	5413	9775
Marsh gas	7851	14,103	5329	9624
Hydrogen	8061	14,542	3259	5898

If the air supplied to the fuel be in excess of that required for perfect combustion, the temperature will be less.

When the excess of air is 50 per cent, the maximum temperature from combustion of carbon is 3515° F.; when the excess is 100 per cent, the maximum temperature is 2710° F.

The specific heats under constant pressure of the gases usually occurring in connection with combustion are

Carbonic-acid gas	0.217
Steam	0.475
Nitrogen	0.245
Air	0.238
Ashes (probably)	0.200
Oxygen	0.241
Carbonic oxide	0.288
Hydrogen	0.235

347. Composition of Fuels.—The fuels in ordinary use contain, in addition to the combustible compounds, more or less mineral or earthy matter that remains as ash after the combustion has taken place; there is also frequently water in the hygroscopic state. The presence of these incombustible substances and the fact that perfect combustion can rarely be secured tend to make the actual heating effect less than that indicated by the theory. The percentage of ash as given in various boiler trials shows a wide variation, as follows:

American coals	5 to 22	per cent
English coals	2.9 to 27.7	"
Prussian coals	1.5 to 11.6	"
Saxon coals	7.4 to 63.4	"

The following table gives the composition of the principal fuels and the weight of air required to produce perfect combustion:

AVERAGE COMPOSITION OF FUELS.

Fuel.	Carbon. C	Hydrogen. H	Oxygen. O	Ash.	Pounds of Air required for one of Fuel.
Charcoal from wood.....	0.93	.....	.....	.....	11.16
" from peat.....	0.80	.....	.....	.....	9.6
Coke, good.....	0.94	.....	.....	.....	11.3
Coal, anthracite.....	0.915	0.035	0.026	0.03 to 0.05	12.13
" dry bituminous.....	0.87	0.05	0.04	0.04 to 0.22	12.06
" coking.....	0.85	0.05	0.06	" " "	11.73
" "	0.75	0.05	0.05	" " "	10.58
" cannel...	0.84	0.06	0.08	" " "	11.88
" dry, long-flaming...	0.77	0.05	0.15	.....	10.32
" lignite.....	0.70	0.05	0.20	.....	9.30
Peat, dry...	0.58	0.06	0.31	5 to 15	7.68
Wood, dry.....	0.51	0.057	42.0	0.01	6.00
" air-dried, 20% H_2O.	39.6	4.8	34.8	0.01	6.00
Mineral oil.....	0.85	0.15	.....	.....	15.7

348. Principle of Fuel-calorimeters.—The caloric value of a fuel is determined by its perfect combustion under such conditions that the heat evolved can be absorbed and measured. It is essential in such cases that (1) the combustion be perfect, and that (2) the heat evolved be absorbed and measured.

The combustion may take place in atmospheric air, in oxygen gas, or in combination with a chemical that supplies the oxygen required. It is essential in all cases that the supply of oxygen be adequate for perfect combustion.

The heat evolved by combustion is determined by the rise in temperature of a given weight of water in a calorimeter of which the cooling effect, K, has been carefully determined, and in which the escaping gases are reduced to the temperature of the room. Let w equal the weight of fuel, E the heat evolved in heat-units by the combustion of one part, W the number of parts by weight of water heated from a temperature t' to t. Then if the escaping gases be reduced in temperature to that of the room,

$$wE = (K + W)(t - t'),$$

from which

$$E = \frac{(K + W)(t - t')}{w}.$$

349. Method of Obtaining Sample of the Fuel.—The calorimetric determination is made only on a very small portion of the fuel, and care should be exercised to have the selected sample fairly represent the fuel to be tested. To select a sample of coal for calorimetric examination several lots of ten pounds each should be chosen from different portions of the coal to be tested. These should be put in one pile, thoroughly mixed, and from the mixture several lots of one pound each taken. These latter quantities are to be pulverized, thoroughly mixed into one pile, and from this the required sample selected. It is recommended that the sample be subjected to a considerable pressure by placing it in a cylinder and compressing it by means of a piston moved by hydraulic pressure or by a screw: this is of especial importance if the fuel is to be burned in oxygen gas, since small particles are likely to form an explosive mixture; and further, soot and tarry masses, which under the most favorable circumstances might be burned, will be found in the residue.

350. Heat-equivalent of the Calorimeter.—The effect of the calorimeter is most conveniently expressed as equivalent to a given weight of water; this is obtained, as for calorimeters used in determining the quality of steam (see Article 317, page 401), either by finding the sum of the products of the weights and specific heats of the various constituents of the calorimeter, or by comparing the results obtained with those which should have been found by the combustion of some fuel whose calorific power is known—as for instance pure carbon in oxygen gas—or again by its cooling effect on steam of known pressure and weight, or on warm water as explained on page 372.

351. Method of Determining Perfect Combustion.—The quality of the combustion is only to be determined by an analysis of the resulting gases and of the products of combustion. In case of perfect combustion all carbon is reduced to

CO_2, all available hydrogen to water, sulphur to sulphuric acid; and further, the sum of the weights of all the products of combustion should, after deducting the air and oxygen obtained from the atmosphere, equal the original weight of the coal.

The method adopted by Favre and Silbermann * of ascertaining the weight of the substances consumed by calculation from the weight of the products of combustion was as follows: Carbonic acid was absorbed by caustic potash, carbonic oxide was first oxidized to carbonic acid by heated oxide of copper and then absorbed by caustic potash; water vapor was absorbed by sulphuric acid. This system showed that it was necessary to analyze the products of combustion in order to detect imperfect action. Thus in the case of substances containing carbon, CO was always present to a variable extent with CO_2, and corrections were necessary in order to determine the total heat due to the complete combination with oxygen. The conclusion arrived at by these experimenters was that in general there was an equality in the heat disengaged or absorbed in the respective acts of chemical combination or of decomposition of the same elements; that is, the heat evolved during the combination of two simple elements is equal to the heat absorbed at the time of the chemical separation, and the quantity of heat evolved is the measure of the sum of the chemical and mechanical work accomplished in the reaction.

352. Favre and Silbermann's Fuel-calorimeter.—This apparatus, as shown in Fig. 208, consisted of a combustion-chamber, *A*, formed of thin copper, gilt internally, and fitted with a cover through which solid combustibles could be introduced into the cage *C*. The cover was traversed by a tube, *E*, connected by means of a suitable pipe to a reservoir of the gas to be used in combustion, and by a second tube, *D*, the lower end of which was closed with alum and glass, transparent but adiathermic substances which permitted a view of the process of combustion without any loss of heat.

For convenience of observation a small inclined mirror was placed above the peep-tube *D*.

* See Conversion of Heat into Work: Anderson.

The products of combustion were carried off by a pipe, *F*, the lower portion of which constituted a thin copper coil, and the upper part was connected to the apparatus in which the non-condensible products were collected and examined. The whole of this portion of the calorimeter was plunged into a thin copper vessel, *G*, silvered internally and filled with water, which

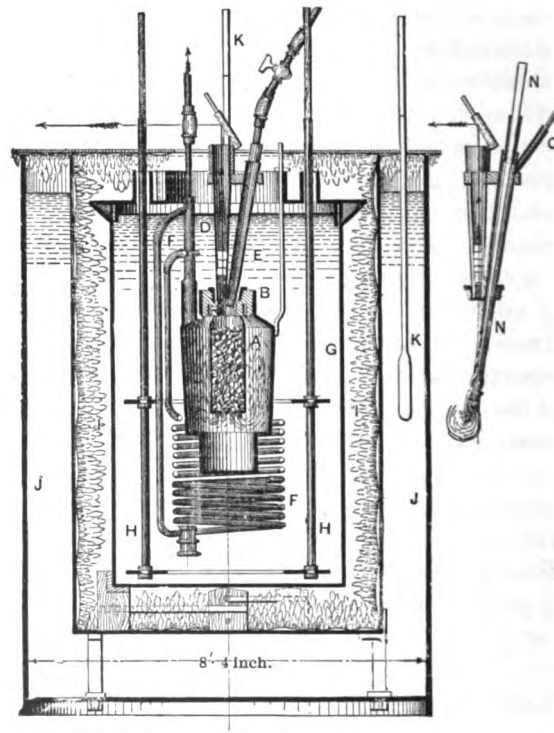

FIG. 208.—FAVRE AND SILBERMANN'S FUEL-CALORIMETER.

was kept thoroughly mixed by means of agitators, *H*. The second vessel stood on wooden blocks inside a third one, *I*, the sides and bottoms of which were covered with swan-skins with the down on, and the whole was immersed in a fourth vessel, *J*, filled with water kept at the average temperature of the laboratory. Thermometers, *K*, *K*, of great delicacy were

used to measure the increase of temperature in the water surrounding the combustion-chamber. The quantity of heat developed by the combustion of a known weight of fuel was determined by the increase of temperature of the water contained in the vessel *G*. For finding the calorific value of gases only, the cage *C* was removed and a compound jet, *NO*, substituted for the single gas-pipe, ignition being produced by an electric spark or by some spongy platinum fixed at the end of the jet.

353. Thompson's Calorimeter.—Thompson's Calorimeter* is often employed for determination of the heating values of fuels. It consists of a glass jar graduated to contain 1934 grams of water; in this are inserted (1) a thermometer to indicate elevation of temperature, and (2) a cylindrical combustion-chamber with a capacity of about 200 grams of water. This chamber is capped at the top, and a small tube furnished with a valve is screwed into it, to hold the fuel. The combustible to be examined, 2 grams, is mixed as intimately as possible with 22 grams of a very dry mixture of 3 parts of potassic chlorate and 1 part of potassic nitrate, and introduced into the combustion-tube; a nitrate-of-lead fuse is added and lighted. This tube is introduced into the combustion-chamber, the cap screwed on, and the whole placed without delay in the water of the calorimeter. The combustion takes place directly in the water, and the gases disengaged rise to the surface. The water is proportioned to the fuel as 966 is to 1, so that the rise in temperature in degrees F. is proportional to the evaporative power. The oxygen required for the combustion is supplied by the chemicals added. The water-equivalent of the calorimeter as above described is about ten per cent. When combustion has ceased, the rise in temperature of the water is observed; to this one tenth is added for the water value of the calorimeter.

The corrected number gives the number of grams of water which a gram of the combustible can evaporate.

---

*See Chemical Technology, Vol. I.

354. The Berthier Calorimeter.*—This calorimeter is based on the reduction of oxide of lead by the carbon and hydrogen of the coal, the amount of lead reduced affording a measure of the oxygen expended, whence the heating power may be calculated by Welter's law, Article 345. One part of pure carbon being capable of reducing 34½ times its weight in lead.

The operation is performed by mixing intimately the weighed sample (10 grams) with a large excess of pure litharge (400 grams). The mixture, placed in a crucible sufficiently capacious to contain three times its bulk, and rendered impervious to the gases of the furnace by a coating of fire-clay or by a glaze, is covered with an equal quantity of pure litharge (protoxide of lead). The crucible, being closed with a lid and placed on a support in the furnace, is slowly heated to redness, and when the gases which cause the mixture to swell considerably have escaped, it is covered with fuel and strongly heated for about ten minutes, in order to collect the globules of lead in a single button. The oxygen from the litharge combines with and burns the combustible ingredients of the fuel, leaving for every equivalent of oxygen consumed an equivalent of reduced metallic lead.

The heating power is calculated as follows: 1 part of pure carbon requires 2.666 parts of oxygen by weight, which taken from litharge leaves 34.5 parts of metallic lead. The same weight of carbon is sufficient to heat 80 parts of water from 32° to 212°. Hence every unit of lead reduced by any kind of fuel corresponds by Welter's law with $\frac{80}{34.5} = 2.23$ parts of water raised from the freezing to the boiling point.

355. The Berthelot Calorimeter.—This calorimeter, as modified by Hempel, consists of a very strong vessel with a capacity of about 250 c.c., into which the fuel is placed after being compressed into a solid form; the combustion is per-

* Chemical Technology, Vol. I., page 337.

formed in an atmosphere of oxygen gas under a pressure of 10 to 12 atmospheres.*

The fuel is ignited by an electric spark, and the heat generated is known by measuring the rise in temperature in the surrounding water, as in the Favre and Silbermann calorimeter.

The oxygen gas is generated in a tube about one inch in diameter connected to the calorimeter by an intervening tube about $\frac{1}{4}$ inch in diameter. To this latter tube is attached a pressure-gauge to indicate the pressure, and a safety-gauge to prevent damage from explosion or excessive pressure. A stop-cock is also inserted close to the calorimeter. For generating the oxygen the tube is filled with 40 grams of a mixture of equal parts of manganese dioxide and potassium chlorate. It is then heated by the full flame of a Bunsen burner applied first at the end nearest the calorimeter and gradually moved to the farther end.

To use the instrument, the fuel, connected to platinum wires for electrical ignition, is introduced and suspended in the calorimeter, the top of which is firmly screwed on and the valve closed. Oxygen gas is then generated until the pressure reaches 90 pounds, and exhausted into the air to remove other gases from the calorimeter. The escape-valve from the calorimeter is closed and oxygen gas generated until the pressure-gauge shows 150 to 175 pounds pressure per square inch; then the connecting stop-valve is closed and the electric current applied. After the heat of combustion has been absorbed the determination is made as with the Favre and Silbermann calorimeter.

355. The Bomb Calorimeter. — This instrument was designed by the French chemist M. Berthelot, and consists of a strong steel vessel provided with a tightly fitting cover into which the coal is placed for combustion. For the purpose of combustion an excess of oxygen gas is supplied under a pressure of from 20 to 30 atmospheres. The fuel is supported by a cage of platinum connected to the cover. The fuel is fired by an electric current passing through connecting

* See Hempel's Gas Analysis, translated by Dennis.

wires and generated by a battery of ten bichromate cells. To prevent the oxidation of the instrument, the bomb built by Berthelot was lined with platinum. The heat given off during the process of combustion was absorbed by water in a vessel surrounding the bomb. During the process of combustion this water was kept in motion by a stirrer, and the heat given off determined by its rise in temperature.

Various modifications of coal-calorimeters employing the principle of Berthelot's instrument have been made and are in extensive use. The form built by Mahler, Fig. 212, is perhaps the best known, which differs from that of Berthelot only in the form of the stirring apparatus and in the lining of the bomb, which is of porcelain enamel, instead of platinum. The German chemist Hempel has also designed a bomb calorimeter in which the bomb is made of steel, the interior of which is protected by an oxidized surface which has been found to give practical results.

The oxygen for use in the calorimeters can be obtained from the decomposition of water by electrical means, or it may

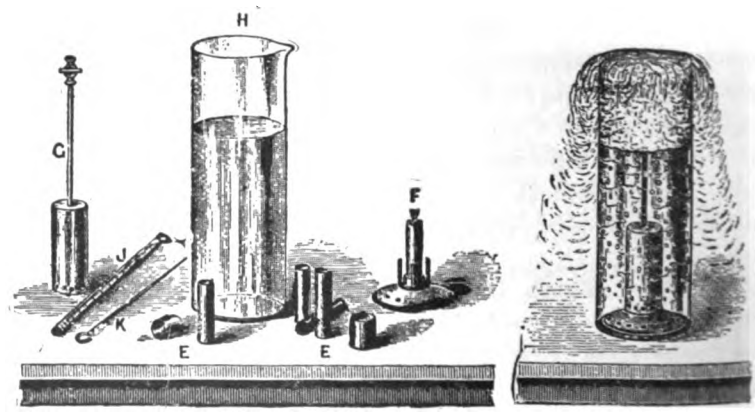

FIG. 209.—PARTS OF THOMPSON'S CALORIMETER IN ACTION.

be made by heating a crucible filled with equal parts of manganese dioxide and potassium chlorate. Some chlorine will usually pass over, which may be removed by passing through

a close roll of brass wire-gauze. The oxygen may be received into a small gasometer and compressed by the action of a pump to the required density. Oxygen is also now manufactured as a commercial article and can be purchased in cylinders holding 4 or 5 cubic feet and under a pressure of 20 atmospheres in nearly all the large cities. Thus it may be purchased in New York of Eimer & Amend.

In the Hempel calorimeter, as shown in Fig. 210, the crucible for making the oxygen is attached directly to the

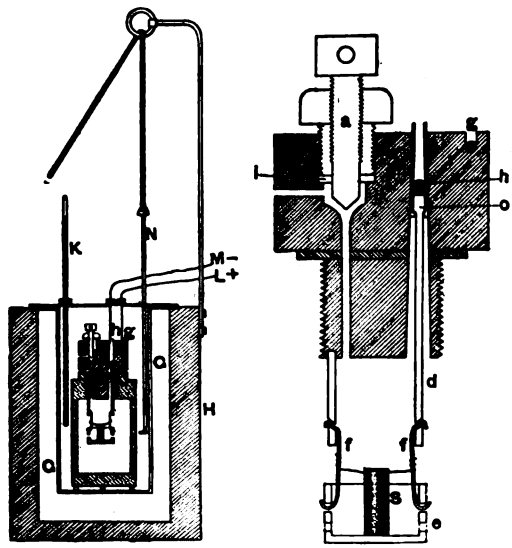

FIG. 210.—HEMPEL'S CALORIMETER WITH ENLARGED CHARGING-PLUG.

calorimeter by means of connecting pipes. In this case the calorimeter is charged before connecting the crucible. The crucible is filled with a mixture of equal parts dioxide of manganese and chlorate of potash, and the oxygen is driven off by the application of heat with the Bunsen burner; the heat being first applied at the end of the crucible nearest the calorimeter. A pressure-gauge *B* is connected to the pipe, and when the required pressure is reached the burner is removed, a connecting stop-cock *b* closed, and the connections to the

crucible removed. To prevent danger from accidents during the generation of the oxygen, the crucible and gauge should be enclosed in a large wooden vessel.

The value of the fuel burned is determined from the rise in temperature of the water; account being taken of the weight of water and also the weights and specific heats of all parts of the calorimeter. Usually during combustion some nitric acid is formed which is deposited on the walls of the calorimeter. The heat liberated in the formation of nitric acid should be taken into account, but as this is seldom greater than $\frac{1}{8}$ of one per cent, it is usually less than the unavoidable

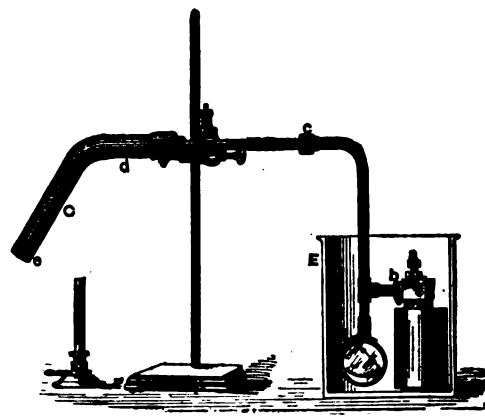

FIG. 211.—CHARGING CALORIMETER WITH OXYGEN.

errors of observation. To avoid the numerous corrections and the tedious calculations which result therefrom, the chemist Hempel adopted the plan of standardizing his instruments by burning definite amounts of pure carbon, the value of which he took as known from the best investigations by Berthelot. To obtain pure carbon with which to standardize the instrument, he pulverized and carbonized crystallized sugar several times in succession, driving off at a high heat all volatile matter. This process of calibration gave a series of factors, which multiplied by thermometer-readings reduced the results to heat-units. The following example from

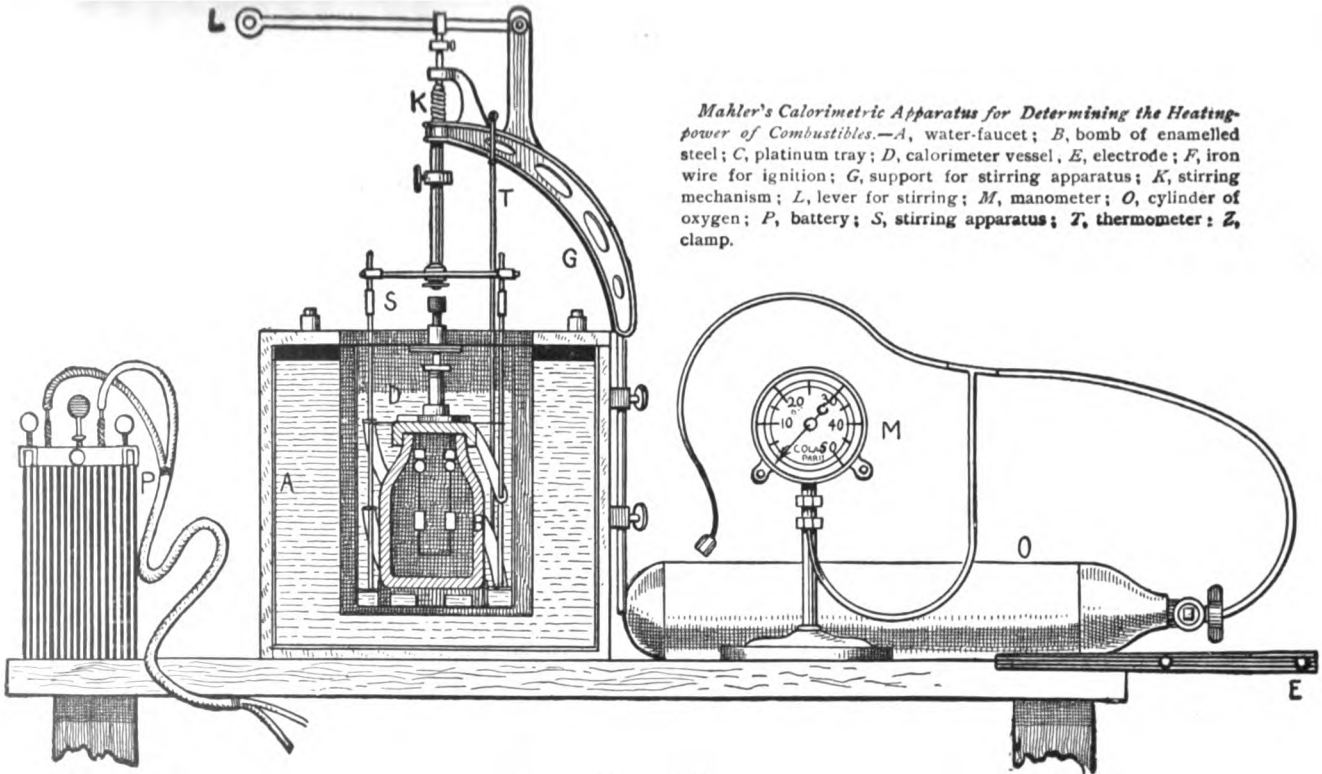

Mahler's Calorimetric Apparatus for Determining the Heating-power of Combustibles.—*A*, water-faucet; *B*, bomb of enamelled steel; *C*, platinum tray; *D*, calorimeter vessel, *E*, electrode; *F*, iron wire for ignition; *G*, support for stirring apparatus; *K*, stirring mechanism; *L*, lever for stirring; *M*, manometer; *O*, cylinder of oxygen; *P*, battery; *S*, stirring apparatus; *T*, thermometer; *Z*, clamp.

FIG. 212.—MAHLER'S CALORIMETER.

"Traité Pratique de Calorimètre Chimique," by M. Berthelot, illustrates the process of reduction necessary in using the bomb calorimeter.

The weight of each part of the calorimeter is carefully ascertained and multiplied by the specific heat of the material composing the part. The sum of these various products gives the water equivalent of the calorimeter which is given later.

DETERMINATION OF THE HEAT IN PURE CARBON.

Dried at a temperature of from 120 to 130 degrees C. until it had attained a constant weight and permitted to cool in a closed vessel and in the presence of concentrated sulphuric acid. (Observations of time and temperature.)

Preliminary Observations Before Combustion.	Observations During Combustion.	Observations After Combustion.
0 min., 17.360 deg. C.	5 min., 18.500 deg. C.	9 min., 18.810 deg. C.
1 " 17.360 "	6 " 18.782 "	10 " 18.802 "
2 " 17.360 "	7 " 18.820 "	11 " 18.795 "
3 " 17.360 "	8 " 18.818 "	12 " 18.785 "
4 " 17.360 "		13 " 18.775 "
		14 " 18.770 "

Initial cooling per minute, zero degrees; final cooling per minute, 0.008 deg. C. Total correction for cooling, 0.046 deg. C. Variation of temperature, not corrected, 18.818 − 17.360 = 1.438 deg. C. Corrected = 1.484 deg. C. Value in water of the calorimeter and contents = 2398.4gr. Weight of nitric acid formed = 0.0173 gr. (Each gram is equal to 227 calories.) Each gram of iron burned is equal to 1650 calories.

Total heat observed ..... = 3558.5 calories.

Disengaged by the combustion of the iron-ware.....22.4 cal.
Disengaged by the formation of nitric acid. .....3.9 cal. } = 26.3 "

Heat obtained from the combustion of the carbon ..... = 3532.9 calories.

Heat for one gram ..... $= \frac{3532.2}{0.4342} = 8136.6$ "

The latest determinations of Berthelot give the absolute heating power of amorphous carbon as 8137.4 calories = 14629.5 B. T. U. In the use of the calorimeter, the coal is to be first powdered and then reduced by pressure to a cylindrical cake or lump which is fired by the heat from an electric current. Corrections to the result are to be made for the heat disengaged by the oxidization of the iron and by the formation of nitric acid and by the vapor of water remaining in the atmosphere of the bomb. All these corrections are very small and may be avoided by using the process of calibration employed by Hempel.

As noticed in the example above cited, the rise in temperature of the surrounding water is very small, and in order to obtain accurate results this water must be thoroughly agitated to produce a uniform temperature; the thermometer used must be capable of reading very small increments of a degree and must be read by a strong reading-glass or attached vernier. The accurate determination of small increments of temperature is nearly impossible with the apparatus to be found in an engineering laboratory. To overcome this difficulty, the author has designed a form of calorimeter in which the increase in temperature is determined by the expansion of the entire amount of water in the vessel surrounding the calorimeter. The value of the scale is determined by calibration. Two forms of this instrument are manufactured by Schaeffer and Budenberg, Brooklyn, N. Y. In one form the combustion is performed in a steel bomb lined with enamel in many respects similar to the Mahler calorimeter. In the other the combustion is performed in a current of oxygen gas under low pressure, and the heat of combustion is absorbed by water in the surrounding vessel, the products of combustion passing through a coil and being finally discharged into the atmospheric air.

356. Fuel-calorimeter in which Heat is Measured by Expansion of Water.—The general appearance of the instrument is shown in Fig. 212; a sectional view of the interior

part is shown in Fig. 214, from which it is seen that, in principle, the instrument is a large thermometer, in the bulb of which combustion takes place, the heat being absorbed by the liquid which is within the bulb. The rise in temperature is denoted by the height to which a column of liquid rises in the attached glass tube.

In construction, Fig. 214, the instrument consists of a chamber, No. 15, which has a removable bottom, shown in section in Fig. 213, and in perspective in Fig. 214. The chamber is supplied with oxygen for combustion through tube 23, 24, 25, the products of combustion being discharged through a spiral tube, 29, 28, 30.

Surrounding the combustion-chamber is a larger closed chamber, 1, Fig. 214, filled with water, and connecting with an open glass tube, 9 and 10. Above the water-chamber 1 is a diaphragm, 12, which can be changed in position by screw 14 so as to adjust the zero level in the open glass tube at any desired point. A glass for observing the process of combustion is inserted at 33, in top of the combustion-chamber, and also at 34, in top of the water-chamber, and at 36, in top of outer case.

This instrument readily slips into an outside case, which is nickel-plated and polished on the inside, so as to reduce radiation as much as possible. The instrument is supported on strips of felting, 5 and 6, Fig. 214. A funnel for filling is provided at 37, which can also be used for emptying if desired.

The plug which stops up the bottom of the combustion-chamber carries a dish, 22, in which the fuel for combustion is placed; also two wires passing through tubes of vulcanized fibre, which are adjustable in a vertical direction, and connected with a thin platinum wire at the ends. These wires are connected to an electric current, and used for firing the fuel. On the top part of the plug is placed a silver mirror, 38, to deflect any radiant heat. Through the centre of this plug passes a tube, 25, through which the oxygen passes to

supply combustion. The plug is made with alternate layers of rubber and asbestos fibre, the outside only being of metal, which, being in contact with the wall of the water-chamber, can transfer little or no heat to the outside.

The discharge-gases pass through a long coil of copper

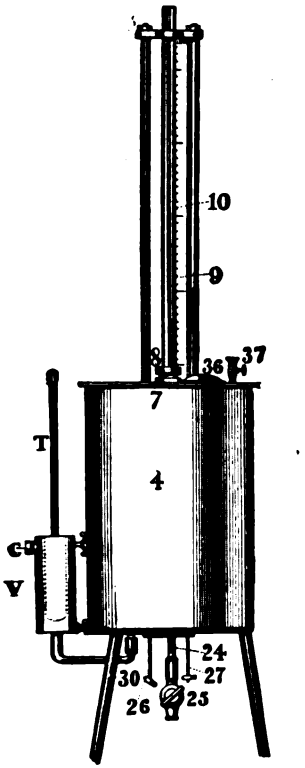

FIG. 213.—FUEL-CALOPIMETER.

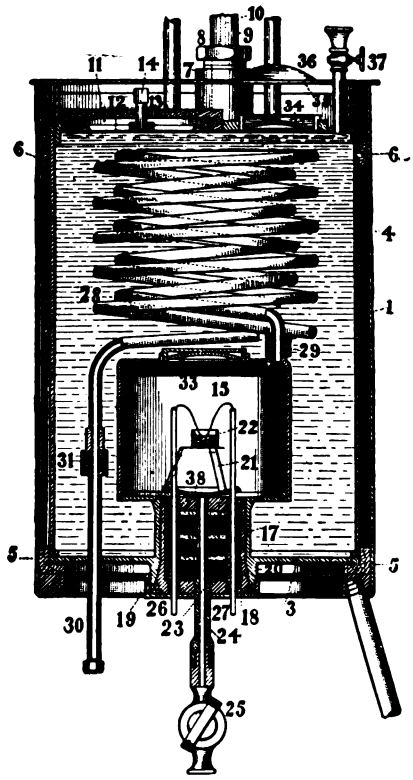

FIG. 214.—ENLARGED SECTION.

pipe, and are discharged through a very fine orifice in a cap at 30.

The instrument has been so designed that the combustion can take place in oxygen gas having considerable pressure, and in the form of a bomb; but in practice we have found that very reliable results have been obtained with pressures

of 2 to 5 pounds per square inch in an instrument of the form described, and this has been commonly used in investigations at Sibley College.

For the purpose of making determinations of fuel, oxygen gas has been made and stored in a gasometer holding about 15 cubic feet, from which it was drawn as required.

Method of Using the Calorimeter.—1. Select an accurate sample by a system of quartering, which shall commence with a very great amount, if possible, and finally terminate with a very small fraction of a pound.

2. Reduce to powder by grinding, in a mortar or a mill, sufficient coal for several samples. A coffee-mill answers excellently for this purpose.

3. Introduce the sample into a small asbestos cup, drive out moisture by warming it over a Bunsen burner or alcohol lamp. Weigh accurately on a fine chemical balance-scale.

4. Introduce the sample into the calorimeter: (*a*) start the oxygen gas flowing; (*b*) fire the charge, which should be done by pressing on a key; (*c*) at instant coal is lighted, throw off the current and note the reading of the scale and time. During combustion keep the discharge orifice open, occasionally trying it with a small wire.

5. Watch the combustion, which will usually require about ten minutes for each gram of coal, and when completed note the scale reading and the time. The difference between first and second reading is the actual scale reading.

6. To correct for radiation note the amount, the water in the column has fallen for the same time as required for combustion; add this to the actual reading to get the corrected scale reading.

7. Divide the value as shown on the diagram by the weight in pounds of the sample burned. The result will be the value in B. T. U. of one pound of coal.

8. Remove the dish in which the combustion took place: weigh it carefully with and without contents. If the combustion has been perfect, the difference of these weights gives

the ash. Wipe the combustion-chamber dry for another determination.

9. To prepare for another determination, remove the calorimeter from the outside case and immerse in cold water, care being taken to prevent any water entering oxygen-tubes or combustion-chamber.

This method is preferable to emptying the calorimeter and adding fresh water each time, since the air, which is always present in water, will affect the results and is a difficult element to remove. The operation of cooling takes but a few minutes and is easily performed.

In order that the instrument may give accurate values, it is necessary that all air be removed from the water, and that the oxygen be supplied at a constant pressure. The pressure with which the instrument was calibrated is given with the calibration curve, and if any other pressure is used a new calibration should be made.

Do not attempt to use the calorimeter in a room whose temperature is above 80 degrees Fahr., as the calorimeter should always be warmer than the air of the room.

In case oxygen is purchased in a condensed form, it can be reduced to any desired amount by passing it into a small gasometer before reading the calorimeter. The gasometer may be made by simply inverting one pail into another which is partly filled with water. By weighting the top pail any pressure required can be produced.

If oxygen is made for especial use, it can be received in a gasometer, made as described, but with sufficient capacity for several tests.

Oxygen can be made by heating a mixture of about equal parts of dioxide of manganese and chlorate of potash placed in a closed retort.

In lighting the platinum wire we use 16 Mesco dry batteries connected in four series. A single cell of a storage battery, the current of which is ordinarily used for incandescent lighting, may be used with success.

EXAMPLE SHOWING HOW TO DETERMINE THE CALORIFIC POWER OF COAL.

Weight of crucible	1.269	grams.
" " " and coal	3.017	"
" " " and ash	1.567	"
" " combustibles	1.450	"
" " ash	.297	"
" " coal	1.747	"

1.747 reduced to pounds = 1.747 × .002205 = .003852 lbs.

First scale-reading,	3.90	inches,	time	2	o'clock,	55	minutes.
Second "	14.70	"	"	3	"	20	"
Third "	14.30	"	"	3	"	45	"

Actual scale reading	3.90 — 14.70 =	10.80	inches.
For radiation	14.30 — 14.70 =	.40	"
Corrected scale-reading		11.2	"

On the diagram 11.2 corresponds to 46.25 B. T. U.'s in sample.

As 46.25 B. T. U. are .00385 lbs., one pound will be:

$$46.25 \div .00385 = 12{,}000 \text{ heat-units.}$$

All calorimeters are calibrated before shipment, but to enable purchasers to make a new calibration in case a new glass tube should have to be inserted we give the following instructions:

1. Make a pure coke, reduce some soft coal to powder, fill a porcelain or clay crucible 2/3 full, cover it air-tight, glow it with a blast-lamp or in a forge-fire for one hour. If cold, grind it in a mortar to a very fine powder. Repeat this operation.

2. Remove gland and hexagon plug-screw from top of calorimeter and fill it with water. Close the plug-screw and connect the glass-tube opening by some rubber hose or glass tube with a smaller vessel filled with water. Boil the water in the calorimeter body; this may be done by a Bunsen burner, protecting the calorimeter by a thin sheet of asbestos. Place

the instrument in such a position that the glass-tube opening may be its highest point and so enable all air and steam to pass through the connection to the smaller vessel. Also keep the water in the smaller vessel boiling until the calorimeter has fully cooled off. Remove rubber connection, fill the glass tube with boiled water and screw it tight. Take care not to allow it to pass so far into the calorimeter that air will be trapped.

Put about two inches kerosene oil on top of water-column to prevent air from coming in contact with the water. Should it be found that the water in column stands too high after the calorimeter has taken the temperature of the room, loosen the plug and allow water to leak out slowly until the scale-reading is about two inches, then close it securely.

3. If the instrument is ready for calibration, follow instructions given under method of using the calorimeter. The difference of weight between the weight of crucible and carbon (coke) and the weight of crucible and ash is the weight of pure carbon burned.

Dividing 14540 by the weight of burned carbon, we obtain the number of heat-units in the sample.

By drawing the oblique line on the chart, take the number of corrected scale-reading as ordinates, and the number of B. T. U.'s in sample as abscissæ, make a point on crossing and draw a line to zero.

EXAMPLE OF CALIBRATION.

Weight of crucible and coke in grams..... 3.002
" " " " ash " " 1.064
" " burned pure carbon..... ... 1.935

1.935 grams reduced to pound = .00426 lbs.

$1.935 \times .002205 = .00426$ lbs.

$14540 \times .00426 = 61.86$ B. T. U. in sample.

First scale-reading, 3.33 inches, time 11 o'clock, 15 minutes
Second " 16.85 " " 11 " 40 "
Third " 16. " " 12 " 10 "

Actual reading.....	16.85 —	3.35 =	13.50 inches.
For radiation.....	16.00 —	16.85 =	.85 "
Corrected scale-reading.....			14.35 "

"DIRECTIONS FOR PROXIMATE ANALYSIS.*—COAL AND COKE."

The sample should be finely pulverized in a mortar, and then thoroughly mixed.

Moisture.—Place the weighed sample (about 1 gram) in a porcelain crucible, and dry in an air-bath for one hour, at a temperature between 105 and 110 degrees C. Weigh as soon as cool. Loss is moisture.

Volatile Matter.—Weigh about 1½ grams of the undried pulverized coal, place it in a platinum crucible and cover tightly. Heat it for 3½ minutes over Bunsen burner (bright red heat), and then immediately, without cooling, for 3½ minutes over blast-lamp (white heat). Cool and weigh. Loss, less the moisture, is volatile matter.

Fixed Carbon.—If a coke be formed in the preceding operation, make a note of its properties, color, firmness, etc., then place the crucible, with cover removed, in an inclined position, and heat over Bunsen burner until all carbon is burned i.e., to constant weight. The combustion may be hastened by stirring the charge from time to time with a platinum wire. Difference between this and last weight is the fixed carbon.

Ash.—Difference between last weight and weight of crucible is the ash.

Total Sulphur in Coal and Coke.—Prepare a fusing mixture by thoroughly mixing two parts calcined magnesia with one part anhydrous sodium carbonate. Determine the sulphur in the mixture.

Thoroughly mix 1 gram of the finely pulverized coal with 1½ grams of fusing mixture. Heat over an alcohol lamp, in an open platinum or porcelain crucible, so inclined that only

* See "Crooke's Select Methods," 2d Edition, pp. 595–607.

its lower half may be brought to a red heat. The crucible should not be over ½ or ⅔ full, and the heat should be gentle at first, to avoid loss upon the consequent sudden escape of volatile matter, if present in large amount. Raise the heat gradually (it must not at any time be high enough to fuse the mixture), and stir the contents of the crucible every five minutes with a platinum wire. The oxidation of the carbon is complete when ash becomes yellowish or light gray (about one hour). Cool crucible, add 1 gram pulverized NH_4NO_3 to the ash, mix thoroughly by stirring with a glass rod, and heat to redness for five to ten minutes, the crucible being covered with its lid.

Cool, digest the mass in water, transfer the crucible contents to a beaker, rinse out the crucible with dilute warm HCl, dilute solution in beaker to about 150 c.c., acidulate with HCl, and heat almost to boiling for five minutes. Filter and precipitate the sulphuric acid in filtrate by $BaCl_2$ in usual manner.

Phosphorus.—If present, it will be found in the ash. Ignite about 10 grams of the coal in a large platinum crucible, and determine the phosphorus in the ash in the usual manner. (See Fresenius, p. 741.)

Sulphur and phosphorus are not usually of importance, unless the coal is destined for certain uses where these ingredients would be harmful; the determination requires much more time than that of all other processes in the proximate analysis.

The operation recommended for a mechanical laboratory would differ principally from that described, first, in the use of larger samples; and second, in the use of porcelain instead of platinum crucibles.

In the determination of the volatile matter the conclusion of the operation may be known by change of color in the flame. During the operation the flame would be yellow or yellowish so long as any volatile matter remained; it would then die down, and when the carbon commenced to burn would be decidedly blue. The operation to be always stopped

soon after the blue flame appears. The crucible recommended is made of Royal Meissen porcelain, and provided with cover. It has a capacity of half an ounce, and costs seventeen cents. During the operation the cover is fitted snugly in place, and the gases escape around the edge, and are kept burning.

The percentage of ash is determined by weighing the residue which remains after combustion in the calorimeter. The burning of the fixed carbon requires a long time when performed in the air, but in the calorimeter the operation is performed very quickly and very accurately, so that the total time required to determine the proximate composition and also the heat-values of a sample of coal need not exceed twenty or thirty minutes, for a person familiar with the operations.

357. Value of Coal determined by a Boiler-trial.— The calorific value of a coal is sometimes determined by the amount of water evaporated into dry steam under the conditions of use in a steam-boiler. This method is fully explained in the latter part of the present work in the chapter on the methods of testing steam-boilers. The calorific values obtained in actual boiler-trials are much less than those obtained in the calorimeters, because of loss of heat by radiation into the air and by discharge of hot gases into the chimney. The results obtained by such a trial by Prof. W. R. Johnson at the Navy Yard, Washington, in 1843, with a small cylindrical boiler, were as follows:

Coal.	Area of Fire-grate, Sq. Ft.	Coal per Hour.		Water evaporated per Hour.		Water evaporated from 212° F. per lb. of Coal.
		Total.	Per Sq. Ft. of Grate.	Total.	Per Sq. Ft. of Grate.	
Anthracite (7 samples)...	14.30	94.94	6.64	12.37	0.87	9.63
Bituminous coals, free burning (11 samples)...	14.14	99.16	7.01	13.73	0.97	9.68
Bituminous coking coals, Virginian (10 samples)..	14.15	105.02	7.42	12.16	0.86	8.48
Average.....	14.20	99.71	7.02	12.75	0.90	9.20

358. Object of Analysis of the Products of Combustion. —The products resulting from the combustion of ordinary fuel contain principally a mixture of air, CO_2, and some combustible gases, as CO and H. To determine whether or not the combustion is perfect, it is necessary to know the percentage that the combustible gases escaping bear to the total products of combustion. It is also important to know whether the air supplied is sufficient for the purposes of combustion, and also whether it is in excess of the amount actually required. As shown in Article 346, page 448, the presence of an excess of air over that required has the effect of lowering the temperature of the furnace; steam would have the same effect even in a greater degree, as can readily be shown by calculation.

From a careful examination of the products of combustion we should be able to ascertain its character and make the necessary corrections for such losses as may be due to imperfect combustion.

The methods to be employed must be such as any engineer can fully comprehend, and the apparatus portable and convenient. The degree of accuracy sought need not be such as would be required in a chemical laboratory where every convenience for accurate work is to be found. Indeed, considering the approximations to be made in its application, it is very doubtful if determinations nearer than one per cent in volume are required, or even of any value. Such determinations are obtained readily with simple instruments, and serve to show the approximate condition of the gaseous products of combustion. The student is referred to "Handbook of Technical Gas Analysis," by Clemens Winkler (London, John Van Voorst), and to "Methods of Gas Analysis," by Dr. W. Hempel, translated by L. M. Dennis (Macmillan & Co.); also to a paper on tests of a hot-blast apparatus by J. C. Hoadley, Vol. VI. Transactions of the American Society of Mechanical Engineers.

In a thorough examination of the value of fuel, the ashes should also be analyzed, since if they contain any combustible,

or partly burned combustible, the heating value must be determined, and proper allowance made for the same.

359. General Methods of Flue-gas Analysis.—The gases to be sought for are CO_2, CO, O, and H. Unless the temperature is very high, CO is found only in very small quantities, and rarely exceeds one per cent. Prof. L. M. Dennis, of Cornell University, makes the statement that Dr. W. Hempel, of Dresden, whose principal work has been the analysis of gases, states that rarely ever is more than a trace of carbonic oxide (CO) to be found in the products resulting from ordinary combustion. Considering the difficulty of absorbing CO, and the consequent errors that are likely to arise, it may be in general better to neglect it. The hydrogen, H, present is also a very small quantity, unless the temperature is abnormally low, and can be neglected without sensible error.

The analysis may be of two kinds, gravimetrical and volumetric. The former is seldom used, but will be found described in an article by J. C. Hoadley, Transactions of the American Society of Mechanical Engineers, Vol. VI., page 786. In this case the various gases are passed through solid absorbents, and the several constituents successively absorbed and weighed. The method of analysis usually adopted is a volumetric one, and consists of the following steps, which will be described in detail later on.

A. The sample is first collected and then introduced into a measuring-tube; 100 c.c. of the gas is retained, the remainder wasted.

B. The constituents of the gas are then absorbed by successive operations, in the following order: carbonic acid (CO_2), free oxygen (O), carbonic oxide (CO), and hydrogen (H). The absorption is accomplished by causing the gas to flow over the reagent in the liquid or solid form, which is introduced into the gas or remains permanently in a separate treating-tube. It is then made to flow back to the measuring-tube and the loss of volume measured. The loss is due to absorption, the various absorbents used being as follows:

For *carbonic acid*, CO_2, either potassium hydroxide (caustic potash KOH), or barium hydroxide.

For *oxygen*, O, either (1) a strong alkaline solution of pyrogallic acid, (2) chromous chloride, (3) phosphorus, (4) metallic copper.

For *carbon monoxide*, CO, either an ammoniacal or a hydrochloric-acid solution of cuprous chloride.

For *hydrogen*, H, an explosion or rapid combustion in the presence of oxygen, or absorption by metallic potassium, sodium, or palladium. The reagent usually employed as an absorbent is the one first mentioned in each case.

360. Preparation of the Reagents.—Absorbents of Oxygen.—1. *Potassium pyrogallate.* This is prepared by mixing together, either directly in the absorption pipette or in the apparatus, 5 grams of pyrogallic acid dissolved in 15 c.c. of water, and 120 grams of caustic potash (KOH) dissolved in 80 c.c. of water. Caustic potash purified with alcohol should not be used for analysis. The absorption of the gas should not be carried on at a temperature under 15° C. (55° Fahr.); it may be completed with certainty in three minutes by shaking the gas in contact with the solution.

2. *Chromous chloride* will absorb oxygen alone in a mixture of oxygen and hydrogen sulphide; it is prepared with difficulty, and not much used.

3. *Phosphorus* is one of the most convenient absorbents: it is to be kept in the solid form under water and in the dark; the gas is to be passed over the reagent, displacing the water, and kept in contact with it for about three minutes. The end of the absorption is shown by a disappearance of a light glow, which characterizes the process of absorption. The phosphorus will remain in serviceable condition for a long time.

4. *Copper*, at a red heat or in the form of little rolls of wire-gauze immersed in a solution of ammonia and ammonium carbonate, is a very active absorbent for oxygen.

Absorbents of Carbonic Acid (CO_2).—1. *Caustic potash.* This solution may be used in varying strengths, depending on the method of gas analysis. With the Elliot apparatus, a solu-

tion of 3 to 5 per cent of KOH in distilled water is sufficiently strong, the gas being kept in contact with it for several minutes. When a separate treating-tube is used for each reagent, a solution of one part of commercial caustic potash to two parts of water is employed. The absorption is accomplished very quickly in the latter case, and often by passing the gas but once through the treating-tube. The process is more quickly and thoroughly performed by introducing into the treating tubes as many rolls of fine iron-wire gauze as it will hold.

2. *Barium hydroxide* in solution is the best absorbent in case the quantity of CO_2 is very small; in this case titration with oxalic acid will be required.

Absorbents of Carbon Monoxide (CO).—1. (*a*) *Hydrochloric-acid solution of cuprous chloride* is prepared by dissolving 10.3 grams of copper oxide in 100 to 200 c.c. of concentrated hydrochloric acid, and then allowing the solution to stand in a flask of suitable size, filled as full as possible with copper wire, until the cupric chloride is reduced to cuprous chloride, and the solution is completely colorless.

(*b*) Winkler directs that 86 grams of copper scale be mixed with 17 grams of copper powder, prepared by reducing copper oxide with hydrogen, and that this mixture be brought slowly and with shaking into 1086 grams of hydrochloric acid of 1.124 specific gravity. A spiral of copper wire is then placed in the solution, and the bottle closed with a soft rubber stopper. It is dark at first, then becomes colorless, but in contact with the air becomes brown. The absorbing power is 4 c.c. of CO.

The *ammoniacial solution* is to be used in case hydrogen is to be absorbed by palladium. This is prepared from the colorless solution (*a*) as follows: Pour the clear hydrochloric acid solution into a large beaker-glass containing 1½ to 2 litres of water, to precipitate the cuprous chloride. After the precipitate has settled, pour off the dilute acid as completely as of possible, then wash the cuprous chloride with 100 to 150 c.c. distilled water, and add ammonia to the solution until the liquid takes a pale-blue color. The solutions of cupric chloride decompose readily, and in general should be used when fresh, or

preserved under a layer of petroleum. The treating-tube containing the reagent is frequently supplied with spirals of small copper wire which tend to preserve and increase the absorbing capacity of this reagent.

361. Method of obtaining a Sample of the Gas.—In order to take a sample of the gas for analysis from any place, such as a furnace, flue, or chimney, an *aspirating-tube* is introduced into the flue: this consists of a tube open at both ends, the outside end being provided with a stop-cock and connected with the collecting apparatus by an india-rubber tube. There

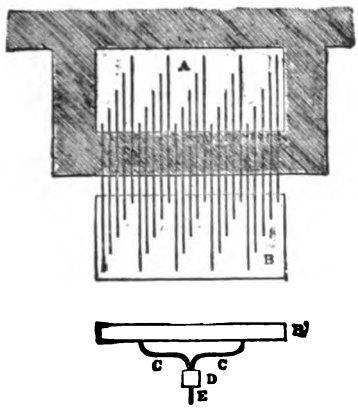

FIG. 215.—HOADLEY'S FLUE-GAS SAMPLER.

is probably a great diversity in the composition of gases from various parts of the flue.

For obtaining an average sample, J. C. Hoadley employed a mixing-box B,* provided with a large number of $\frac{1}{4}$-inch pipes, ending in various parts of the cross-section of the flue A. An elevation of the mixing-box is shown at B'. From the mixing-box four tubes cC lead downward from various parts to a mixing-chamber D, from which a pipe E leads to the collecting apparatus. Two of these mixing-boxes were used, one placed in the flue a short distance above the other, and an agreement of the samples obtained from each was regarded as proof of the substantial accuracy of the sample.

* Trans. Am. Soc. M. E., Vol. VI.

It is hardly probable that a tube furnished with various branches or a long slit will give a fair sample, since the velocity of gases in the aspirating-tube is such that most of the gas will be collected at the openings nearest the collecting apparatus; the author has often employed a branch-tube with holes opening in different portions of the chimney. The material for the aspirating-tube is preferably porcelain or glass, but iron has no especial absorptive action on the gases usually to be found in the flue, and may be used with satisfaction. A long length of rubber tubing may, however, sensibly affect the results.

The gas should be collected as closely as possible to the furnace, since it is liable to be diluted to a considerable extent by infiltration of air through the brick-work beyond the furnace.

In order to induce the gas to flow outward and into the collecting apparatus, pressure in the collecting vessel, termed an *aspirator*, must be reduced below that in the flue. This is accomplished by using for an aspirator two large bottles connected together by rubber tubing near the bottom, or better still, two galvanized iron tanks, about 6 inches diameter and 2 feet high, connected near the bottom by a rubber tube, in which is a stop-cock; one of the bottles or tanks has a closed top and a connection for rubber tubing provided with stop-cock at the top; the other bottle or tank is open to the atmosphere. To use the aspirator, the vessel with the closed top is filled with water by elevating the other vessel; it is then connected to the aspirating-tube, the open vessel being held so high that it will remain nearly empty. After the connection is made, and the stop-cocks opened, the empty vessel is brought below the level of the full one, and the water passing from the one connected to the aspirating-tube lessens the pressure to such an extent that it will be filled with gas. This process should be repeated several times in order to insure the thorough removal of all air from the aspirating-tubes. The liquid used for this purpose is generally water, which is an absorbent to a considerable extent of the gases

contained in the flues. To lessen its absorbent power, the water used should be shaken intimately with the gas in order to saturate it before the sample for analysis is taken. When mercury is used as the liquid this precaution is not necessary.

A small instrument, on the principle of an injector, in which a small stream of water or mercury is constantly delivered, is an efficient aspirator, and is extremely convenient for continuous analysis.

362. General Forms of Apparatus employed for Volumetric Gas Analysis.—The apparatus employed for volumetric gas analysis consists of a measuring-tube, in which the volume of gas can be drawn and accurately measured at a given pressure, and a treating tube into which the gases are introduced and then brought in contact with the various reagents already described. The apparatus employed may be divided into two classes: (1) those in which there is but one treating-tube, the different reagents being successively introduced into the same tube; (2) those in which there are as many treating-tubes as there are reagents to be employed, the reagents being used in a concentrated form, and the gases brought into contact with the required reagent by passing them into the special treating tube.

In either case the steps are, as explained in Article 358: (*a*) Obtain 100 c.c. by measurement; (*b*) to absorb the CO_2, bring the gas in contact with KOH, and measure the reduction of volume so caused; this is equivalent to the percentage of CO_2; (*c*) bring the gas in contact with pyrogallic acid and KOH, and absorb the free oxygen. Measure the reduction of volume so caused; this is equivalent to the percentage of free oxygen; (*d*) determine the other constituents in a similar manner.

In performing these various operations it is essential that the tubes be kept clean and that the reagents be kept entirely separate from each other. This is accomplished by washing or causing some water to pass up and down the tubes or pipettes several times after each operation.

363. Elliot's Apparatus.—This is one of the most simple outfits for gas analysis, and consists of a treating-tube AB and

a measuring-tube $A'B'$, Fig. 216, connected by a capillary tube at the top, in which is a stop-cock, G. The tubes shown in Fig. 163 are set in a frame-work having an upper and a lower shelf, on which the bottles L and K can be placed. In using the apparatus, it is first washed, which is done by filling the bottles with water, opening the stop-cocks F and G, and alternately raising and lowering the bottles K and L. The bottles are then filled with clean distilled water, raised to the positions shown, and the stop-cocks G and F closed. The gas is then introduced by connecting the discharge from the aspirator to the stem of the three-way-cock F, and turning it so that its hollow stem is in connection with the interior of the tube AB; lowering the bottle L, the water will flow out from the tube AB and the gas will flow in. When the tube AB is full of gas the cock F is closed, the aspirator is disconnected, and the gas is measured. The gas must be measured at atmospheric pressure. That may be done by holding the bottle in such a position that the surface of the water in the bottle shall be of the same height as that in the tube. A distinct meniscus will be formed by the surface of the water in the tube; the reading must in each case be made to the bottom of the meniscus. To measure the gas, which will be considerably in excess of that needed, the cock G is opened, the bottle K depressed, the bottle L elevated; the gas will then pass over into the measuring-tube $A'B'$; the bottle K is then held so that the surface of the water shall be at the same level as in the measuring-tube, and the bottle L manipulated until exactly 100 c. c. are in the measuring-tube; then the cock G is closed, the cock F opened, the bottle L raised, and the remaining gas wasted, causing a little water to flow out each time to clean the connecting tubes. The measuring-tube $A'B'$ is surrounded with a jacket of water to maintain the gas at the uniform temperature of the room. After measuring the sample it is then run over into the treating-tube AB, and the reagent introduced through

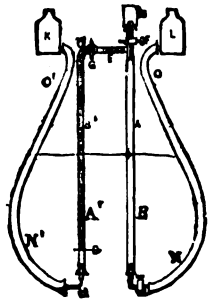

FIG. 216.—ELLIOT'S APPARATUS.

the funnel above F by letting it drip very slowly into the tube AB. After there is no farther absorption in the tube AB, the cock F is closed and the gas again passed over to the measuring-tube $A'B'$, and its loss of volume measured. This operation is repeated until all the reagents have been used; in each case, when the gas is run back from the measuring-tube, pass over a little water to wash out the connections; exercise great care that in manipulating the cocks K or G no gas be allowed to escape or air to enter.

364. Wilson's Apparatus.*—This apparatus is illustrated in Fig. 217. It is used in essentially the same manner as the Elliot apparatus, mercury being used as the displacing liquid in place of water. It consists of a treating-tube d, a measuring-tube a, connected at the top by a capillary tube f. The measuring-tube ends in a vessel filled with mercury, and in this case the pressure on the tubes can be regulated by lowering and raising the single bottle filled with mercury, and the gas can be manipulated as in the Elliot apparatus, using one bottle instead of two. Reagents are introduced into the funnel e, and come in contact with the gas in the treating-tube d.

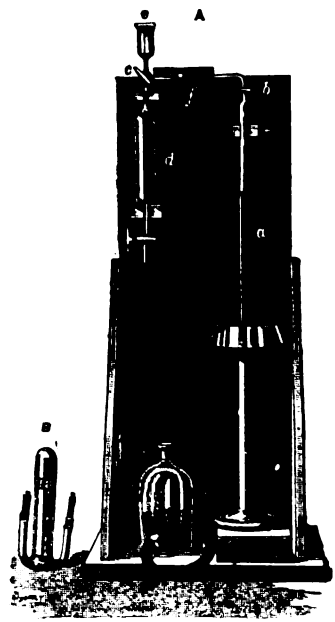

FIG. 217.—APPARATUS FOR GAS ANALYSIS.

The collecting-tube used with this apparatus is shown at B, and consists of a vessel filled with mercury. One side is connected to the *aspirator-tube;* some of the mercury is allowed to run out through a cock, and the space is filled by the gas. Sufficient mercury is retained to form a seal.

365. Fisher's Modification of Orsat's Apparatus.—This

* Thurston's Engine and Boiler Trials, p. 107.

apparatus, shown in Fig. 218, belongs to the class in which each reagent is introduced in a concentrated form into a special treating-tube. The apparatus consists of a measuring-tube surrounded by a water-jacket, into which the gas can be introduced substantially as explained for the Elliot apparatus. Each

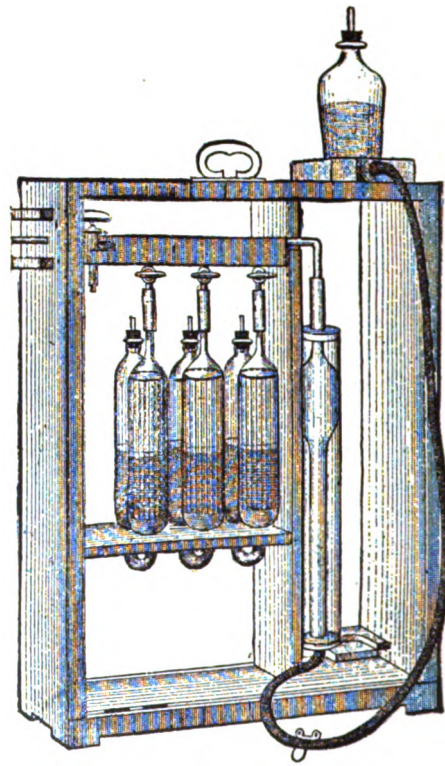

FIG. 218.—ORSAT'S GAS-ANALYSIS APPARATUS.

reagent is introduced in a concentrated form into a pair of burettes connected at the bottom by a U-shaped tube.

In making an analysis the gas is first drawn into the measuring-tube and 100 c.c. retained; the cock in the tube leading to one of the treating-tubes is then opened, the bottle raised, and the gas driven over into the treating-tube. This

operation is facilitated by connecting a soft rubber bag to the opposite side of the treating-tube, by means of which alternate pressure and suction can be applied, and the reagent protected from the atmosphere. After the absorption is complete, which will take from one to three minutes in each tube, the gas is returned to the measuring-tube by lowering the bottle and exerting pressure on the attached rubber bag. The rubber bag is not shown in Fig. 218, and is not required, provided the treating-tube is completely filled with the reagent on the side toward the measuring-tube.

The treating-tubes are filled in order from the measuring-tube with the following reagents: (1) with 33 per cent solution of KOH; (2) with a solution of pyrogallic acid and KOH, or with sticks of phosphorus (see Article 360); (3) with a hydrochloric-acid or an ammoniacal solution of cuprous chloride in contact with copper wire (see Article 359).

In the first treating-tube is absorbed CO_2, in the second O_2, and in the third CO.

A modification of the Orsat apparatus has a fourth tube in which hydrogen can be exploded; the reduction in volume, due to the explosion, gives the amount of hydrogen present.

An apparatus for flue-gas analysis has been designed by the author in which the treating-tubes are arranged as in the Orsat, but they are of such a form as to permit the use of solid reagents for absorbing oxygen, and are much less liable to rupture. It is used exactly as described for the Orsat, but is much more convenient and is somewhat more accurate.

366. Hempel's Apparatus for Gas Analysis.*—This apparatus, shown in Figs. 219 to 224, is especially designed for the accurate analysis of the constituents of various gases; for laboratory use it presents many advantages over the other apparatus described. The apparatus consists of the following parts: 1. The measuring burette, shown in Fig. 220, which is constructed and used as follows: It is furnished with an iron

* See Hempel's Gas Analysis, by L. M. Dennis. Catalogue of Eimer & Amend, New York.

base, which is connected by a rubber tube to an open tube *a* (see Fig. 219) with a similar base. The stop-cock *d* is opened, the tube *a* elevated, and water or mercury, whichever may be

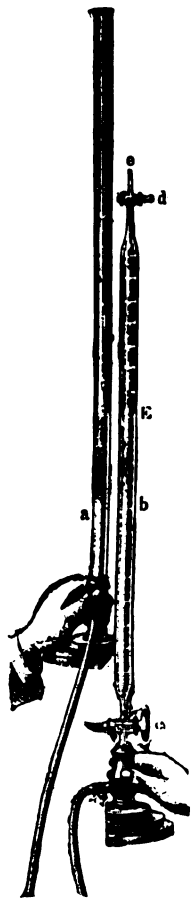

FIG. 219.

FIG. 220.

used, flows from *a* over to *b*. Gas is introduced as follows: The measuring-tube *b* is filled with liquid, the cocks *d* and *c* closed, and connection made at *e* to the vessel containing the gas to be measured; the cocks *d* and *c* are then opened, the

tube *a* lowered; the liquid will then flow from the measuring-tube *b* to *a*, and the gas will fill the measuring-tube. To measure the volume of gas, hold the tube *a* as shown in Fig. 219, so that the water-level shall be the same in both tubes, thus bringing the gas under atmospheric pressure. Read the vol-

FIG. 221.

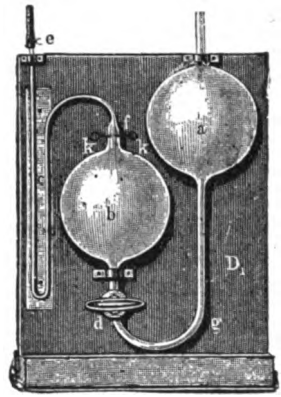

FIG. 222.

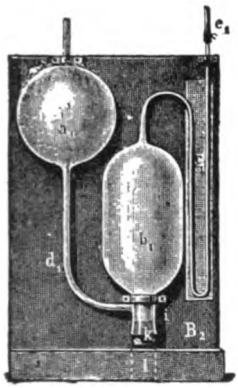

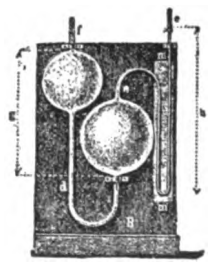

FIGS. 223–224.—HEMPEL'S ABSORPTION BURETTES.

ume directly by the graduation corresponding to the lower edge of the meniscus.

The *absorption-pipettes* are different in form from those used in the Orsat apparatus, and are connected only as required to the measuring-burette, but are used in essentially the same way. Several forms of these are employed as shown in Figs. 221 to 224. The forms shown in Fig. 222 and Fig. 224 are

ordinarily used for reagents in solution. In such a case the measuring-tube is connected at *e*, Fig. 222, the reagent occupying the bulbs *a* and *b*. The top of the measuring-burette *e*, Fig. 219, is connected to the absorption-pipette, and the gas moved alternately forward and backward as required by raising or lowering the tube *a*. In case reagents in the solid form are to be used, the absorption-pipette is made of the form shown in Fig. 223, in case regents which decompose very easily are used a pipette of the form shown in Fig. 221 is employed. The general methods employed are the same as those previously described.

367. Deductions and Computations from Flue-gas Analysis.—The determinations give the percentage of volume of CO_2, O, and CO existing in the products of combustion. Of these constituents the carbon is derived entirely from the fuel and the oxygen in great part from the atmosphere. Every part of oxygen drawn in from the atmosphere brings with it nitrogen, which passes through the furnace unchanged. The nitrogen is calculated as follows: The proportion of nitrogen to oxygen existing in the atmosphere is 79 to 21 by volume: call this ratio S; denote the percentage of volume of the gases existing in the sample as follows: CO_2 by K', oxygen by O'. CO by U', nitrogen by N'. Then we shall have

$$K' + O' + U' + N' = 100 \text{ per cent}, \quad . \quad . \quad . \quad (1)$$

from which

$$N' = 100 - (K' + O' + U'). \quad . \quad . \quad . \quad . \quad (2)$$

If the oxygen were all derived from the atmosphere, both the amount of *nitrogen* N' and of *carbonic oxide* U' could be computed, since in such a case the volume occupied by the free oxygen before combining would equal

$$K' + O' + \tfrac{1}{2}U'.$$

Hence the nitrogen

$$N'' = S(K' + O' + \tfrac{1}{2}U'). \quad . \quad . \quad . \quad . \quad . \quad (3)$$

Substituting this latter value in equation (1),

$$K' + O' + U' + S(K' + O' + \tfrac{3}{8}U') = 100,$$

from which

$$U' = \{100 - (K' + O')(1 + S)\} \div \left(1 + \frac{S}{2}\right). \quad . \quad (4)$$

Since there is to be found from 2 to 5 per cent of oxygen in the fuel, equation (4) will generally give negative values for the CO, and should not be used.

The composition of the flue-gases is an index of the completeness of the combustion. The flue-gases should contain only nitrogen, oxygen, steam, and carbon dioxide, if the combustion is perfect. Since the amount of CO and of hydrogen compounds are always small, the excess of air can be computed very nearly from the amount of CO_2. Thus, were the products of combustion free oxygen, nitrogen, and carbon dioxide, only, the volume of oxygen and carbon dioxide would replace that of oxygen in the air, or would equal about 20.8 per cent. On account of slight losses, it is more nearly 20 in actual cases. The percentage of excess of air would then be 20 less the per cent of carbon dioxide divided by the percentage of carbon dioxide,

$$y = \frac{20 - k'}{k'}. \quad . \quad . \quad . \quad . \quad . \quad . \quad . \quad (5)$$

Siegert gives an approximate formula for the percentage of heat lost,

$$V_1 = 0.65\,\frac{T - t}{CO_2} = \text{in centigrade units}, \quad . \quad (6)$$

in which T = temperature of the flue;
t = temperature of air entering furnace,
CO_2 = percentage of CO_2.

The principal object of the flue-gas analysis may be considered as accomplished when the percentage of uncombined

oxygen and of CO_2 is determined, since in every case the amount of the other gases present will be very small. From these we can find the ratio of the total oxygen supplied to that used. This ratio, which is called the *dilution coefficient* X, shows the volume of air supplied to that required to furnish the oxygen for the combustion.

It may be computed by comparing the total volume of gases with that required to unite with the combined oxygen, from which

$$X = \frac{N'}{N' - SO'} = \left(1 + \frac{20 - K}{K'}\right), \text{ nearly.} \quad . \quad . \quad (7)$$

The analysis and the computations considered relate to volumes of the various gases. They may be reduced to *proportional weights* by multiplying the volume of each gas by its molecular weight and dividing by the total weights. Knowing the proportional weights for each gas and the total carbon consumed, the *total air* passing through the furnace can be computed. Thus for the perfect combustion of a pound of carbon will be required 2.67 pounds of oxygen, for which will be required 11.7 pounds of air. If the ratio of air used to that required be X, then the *weight of air* per pound of fuel equal $11.7X$. One pound of air at 32° Fahr. occupies 12.5 cubic feet. Knowing which, the volume of air per pound of coal can be computed as equal

$$12.5 \times 11.7X = 146.2X.$$

The *maximum temperature* T_m, that can possibly be attained in the furnace, is to be calculated as in Article 346, page 449.

$$T_m = \frac{14500}{(3.67)(0.216) + (8.88)(0.24) + (X - 1)(12.6)(0.238}$$

$$= \frac{14500}{2.91 + 2.84(X - 1)} = \frac{5000}{X} \text{ approximately.} \quad . \quad .$$

Having the maximum temperature of the furnace and the temperature of the escaping gases, the *efficiency*, E, of the boiler and grate may be calculated by the formula

$$E = \frac{T_m' - T'}{T_m'}, \quad . \quad . \quad . \quad . \quad . \quad . \quad . \quad (9)$$

in which T_m' is the excess of temperature of the furnace and T' the excess of temperature of the escaping gases above that of the entering air. This hypothesis would be strictly true were there no loss of heat and were the weight of entering and discharge gases the same. The error in the calculation is not usually a serious one.

Rankine, in his work on the steam-engine, pages 287 and 288, gives formulæ for computing velocity of flow in flues, the head required to produce a given reading of the draught-gauge, and the required height of chimney.

These formulæ are developed from the experimental work of Peclét, and while they do not agree well with modern practice, still give interesting results for comparison. The practical application is shown in the following example of an analysis made at Cornell University, the coal burned being that obtained after deducting ashes and clinkers.

368. Form for Data and Computations in Flue-gas Analysis.—Test made Nov. 3, 1890.

Determinations made by F. Land, H. B. Clarke, and O. G. Heilman.

Location of plant, Ithaca, N. Y.

Owners, Cornell University.

Area of grate, sq. ft. 18.1

Area of chimney, sq ft. (symbol A) 12.5

Height of chimney, in feet (symbol H') 100

Length of heated flue (symbol l), *feet* 130

Inside perimeter of chimney, feet 14

Number of boilers 3

Size of boilers: one of 61 H. P., two of 250 H. P.

Kind of boilers: Water-tube, made by Babcock & Wilcox.

Character of draught, forced by steam-blowers.

	Symbol.	Formula.	Determination. 1	2	3
Reading draught-gauge, water-inches	r		0.4	0.4	0.4
Temperature flue	T		300°	300°	320°
Temperature boiler-room	t		76°	76°	76°
Temperature outside air	t'		42°	42°	42°
Weight of coal burned per second	w		.5 lbs.	.5 lbs.	.5 lbs.
CO_2, per cent of volume	K'		6.9	6.8	7.6
$O + CO_2$, per cent of volume			16.5	16.9	16.9
O, free oxygen, per cent of volume	O'		9.6	10.1	9.3
CO, per cent of volume	U'		0.08	0.07	0.09
Nitrogen, per cent of volume	N'	$100 - (K' + O' + U')$	86.4	82.4	82.2
Dilution coefficient	X	$\frac{N'}{N' - 3O'}$	1.72	1.89	1.75
Proportional weight	M	$28N' + 32O' + 28U' + 44K'$	1827.	1756.9	1773.1
Per cent free O. by Weight		$\frac{16O'}{M}$	9 per cent	9.1 per cent	8.4 per cent
Per cent total O. by weight		$\frac{16}{M}(2K' + U' + 2O')$	5.7	22.7	26.2
Per cent total carbon by weight		$\frac{12}{M}(U' + K')$	8.5	8.0	8.4

Weight of air per pound carbon	W	$11.7X$	20.3	22.3	21.5
Heat units lost per pound carbon in flue	B	$0.238(T' - t)(W + 1)$	1090.	1222.	8263.
Efficiency per cent	E	$\frac{T_m' - T'}{T_m'}$	81.5	86.0	77.2
Per cent heat lost in flue	e	$\frac{B}{14500}$	8.4	9.2	8.6
Maximum temperature possible in furnace, degrees Fahr.	T_m'	$5000 + X$	2910.	2650.	2850.
Volume air per pound coal at 32° Fahr., cu. ft.	V_0	$12.5\,W$	255.	277.	269.
Velocity in feet per second*	u	$\frac{wV_0(461 + T)}{493A}$	17.8	19.8	18.6
*Head to produce draught, from calculated velocity	h	$\frac{u^2}{2g}\left(13 + \frac{0.012A}{m}\right)$	64.	79.1	69.8
*Head to produce draught, from draught gauge-reading	h'	$\frac{(461 + T')r}{94.7\left(.0807 + \frac{1}{V_0}\right)}$	38.6	38.3	39.
*Required height chimney	H	$\frac{h}{.96\frac{461 + T'}{461 + t'} - 1}$	78.	75.	73.
Actual height	H'	.....	100.	100.	100.
Throttling effect damper		$H' - H$	22.	25.	27.

NOTE.—In formulæ S = ratio of N to O, which in the example was taken as equal to 3.77. Symbol for temperature, T with prime, denotes absolute temperature.

* See Rankine's Steam-engine, pages 287 and 288.

CHAPTER XV.

METHODS OF TESTING STEAM-BOILERS.

369. Object of Testing Steam-boilers.—The object of the test must be clearly perceived in the outset; it may be to determine the efficiency of a given boiler under given conditions; the comparative value of various fuels, or of different boilers working under the same conditions; or the quantity of coal consumed and water used in providing steam for a given engine. The results of the test are usually expressed in pounds of water evaporated for one pound of the fuel used.

The conditions of temperature and pressure between which boilers work vary within wide limits, the amount of heat absorbed per pound of steam produced is not constant, and a standard of reference is necessary. Thus to convert a pound of steam from feed-water at a temperature of 70 degrees Fahr. into steam at 70 pounds absolute pressure per square inch will require, per pound of steam, $(1174.3 - 70 + 32) = 1136.3$ B. T. U.; but to convert a pound of water at a temperature of 212° into steam at atmospheric pressure will require only 967 B. T. U. To compare the work done with a standard condition it is customary to express the results of the test as equivalent to the evaporation per pound of fuel from water at 212° Fahr. to steam at atmospheric pressure, or, in other words, "from and at 212°."

The fuel also varies greatly in its evaporative power, as shown in the preceding chapter, and, moreover, a certain proportion is likely to drop through the grates unconsumed, so that

it is customary to reduce the results still further, and to find the evaporation per pound of the combustible part.

370. Definitions.—The following terms are frequently used:

Actual evaporation. This is the evaporation per pound of fuel or of combustible under the actual conditions of the test, uncorrected for temperature of feed-water and for moisture.

Equivalent evaporation from and at 212° is the amount of water that would have been evaporated had the temperature of feed-water been 212°, the steam dry and at atmospheric pressure. If x represent the quality of steam, e the factor of evaporation, the equivalent evaporation is equal to the actual multiplied by xe.

Factor of evaporation is the ratio that the total heat, λ, in one pound of steam at the given pressure and reckoned from the temperature, t, of feed-water, bears to the latent heat of evaporation at 212°, r. That is,

$$e = \frac{\lambda - t + 32}{r}.$$

A table of the factors of evaporation is given in the Appendix.

The *ash* is the actual incombustible part of the coal; it is the residue which falls through the grates, less any combustible particles.

The *combustible* is the fuel less the residue which falls through the grates; it is the weight of that portion actually burned. In the absence of any determinations whatever, the combustible is frequently assumed as $\frac{5}{6}$ of that of the coal.

The *quality* of the steam is the percentage by weight of dry saturated steam in a mixture of steam and water. It is to be found by a throttling or separating calorimeter attached very near the boiler (see Articles 334 to 338).

371. The Efficiency of a Boiler.—The efficiency is the ratio of the heat utilized to that supplied. The *heat supplied* is measured by the coal consumed, multiplied by the heat value per pound.

There are in use two methods of defining and calculating the efficiency of a boiler. They are:

1. Efficiency of the boiler $= \frac{\text{Heat absorbed per lb. combustible}}{\text{Heating value of 1 lb. combustible}}$.

2. Efficiency of the boiler and grate

$$= \frac{\text{Heat absorbed per lb. coal}}{\text{Heating value of 1 lb. coal}}.$$

The first of these is sometimes called the efficiency based on combustible, and the second the efficiency based on coal. The first is recommended as a standard of comparison for all tests, and this is the one which is understood to be referred to when the word "efficiency" alone is used without qualification. The second, however, should be included in a report of a test, together with the first, whenever the object of the test is to determine the efficiency of the boiler and furnace together with the grate (or mechanical stoker), or to compare different furnaces, grates, fuels, or methods of firing.

In calculating the efficiency where the coal contains an appreciable amount of surface moisture, allowance is to be made for the heat lost in evaporating this moisture by adding to the heat absorbed by the boiler the heat of evaporation thus lost.

372. The Heat-balance.—An approximate "heat-balance, or statement of the distribution of the heating value of the coal among the several items of heat utilized and heat lost should be included in the report of a test when analyses of the fuel and of the chimney-gases have been made. This should show both in B.T.U. and in per-cent the total heat received, that absorbed by the boiler, discharged in the flue with the products of combustion, that lost in evaporating moisture in the combustible, that due to incomplete combustion of carbon or hydrogen, and that not accounted for.

373. Horse-power of a Boiler.—The horse-power of a boiler is a conventional definition of capacity, since the boiler of itself does no work. As the weight of steam required for different engines varies within wide limits, an arbitrary rating was adopted by the judges of the Centennial Exhibition in

1876 as a standard nominal horse-power for boilers. This standard, which is now generally used, fixed one horse-power as *equivalent to* 30 *pounds of water evaporated into dry steam per hour from feed-water at* 100° *Fahr., and under a pressure of seventy pounds per square inch above the atmosphere.* This is equal to an evaporation of 34.488 pounds from and at 212° F. The "unit of evaporation" being 966.7 B. T. U., the commercial horse-power is $34.488 \times 966.7 = 33{,}391$ B. T. U.

374. Graphical Log.—The results of a boiler-test can be represented graphically by considering intervals of time as proportional to the abscissæ, and ordinates as proportional to the various pressures and temperatures measured, as shown in Fig. 225, from Thurston's Engine and Boiler Trials.

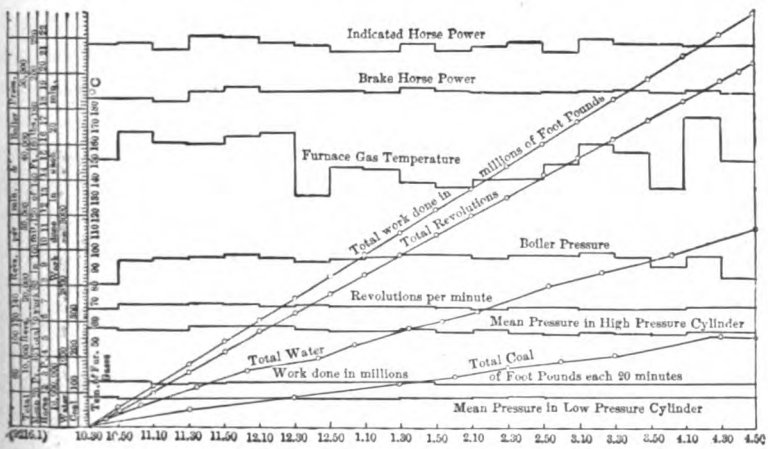
Indicated Horse Power
Brake Horse Power
Furnace Gas Temperature
Total work done in millions of Foot Pounds
Total Revolutions
Boiler Pressure
Revolutions per minute
Mean Pressure in High Pressure Cylinder
Total Water
Work done in millions
Total Coal
of Foot Pounds each 20 minutes
Mean Pressure in Low Pressure Cylinder
10.30 10.50 11.10 11.30 11.50 12.10 12.30 12.50 1.10 1.30 1.50 2.10 2.30 2.50 3.10 3.30 3.50 4.10 4.30 4.50

FIG. 225.

375. Method of Making a Boiler-test.—A standard method of making a boiler-test was adopted by the American Society of Mechanical Engineers in 1884; this was revised in 1899. The first report is published in the Transactions, Vol. VI, the latter in Vol. XXI, with discussion on the same as appendices.

RULES FOR CONDUCTING BOILER TRIALS.

CODE OF 1899.

I. *Determine at the outset* the specific object of the proposed trial, whether it be to ascertain the capacity of the boiler, its efficiency as a steam generator, its efficiency and its defects under usual working conditions, the economy of some particular kind of fuel, or the effect of changes of design, proportion, or operation; and prepare for the trial accordingly. (Appendix II.)

II. *Examine the boiler*, both outside and inside; ascertain the dimensions of grates, heating surfaces, and all important parts; and make a full record, describing the same, and illustrating special features by sketches. The area of heating surface is to be computed from the surfaces of shells, tubes, furnaces, and fire-boxes in contact with the fire or hot gases. The outside diameter of water-tubes and the inside diameter of fire-tubes are to be used in the computation. All surfaces below the mean water level which have water on one side and products of combustion on the other are to be considered as water-heating surface, and all surfaces above the mean water level which have steam on one side and products of combustion on the other are to be considered as superheating surface.

III. *Notice the general condition* of the boiler and its equipment, and record such facts in relation thereto as bear upon the objects in view.

If the object of the trial is to ascertain the maximum economy or capacity of the boiler as a steam generator, the boiler and all its appurtenances should be put in first-class condition. Clean the heating surface inside and outside, remove clinkers from the grates and from the sides of the furnace. Remove all dust, soot, and ashes from the chambers, smoke connections, and flues. Close air leaks in the masonry and poorly fitted cleaning doors. See that the damper will open wide and close tight. Test for air leaks by firing a few shovels of smoky fuel and immediately closing the damper, observing the escape of smoke through the crevices, or by passing the flame of a candle over cracks in the brickwork.

IV. *Determine the character of the coal* to be used. For tests of the efficiency or capacity of the boiler for comparison with other boilers the coal should, if possible, be of some kind which is commercially regarded as a standard. For New England

and that portion of the country east of the Allegheny Mountains, good anthracite egg coal, containing not over 10 per cent. of ash, and semi-bituminous Clearfield (Pa.), Cumberland (Md.), and Pocahontas (Va.) coals are thus regarded. West of the Allegheny Mountains, Pocahontas (Va.) and New River (W. Va.) semi-bituminous, and Youghiogheny or Pittsburg bituminous coals are recognized as standards.* There is no special grade of coal mined in the Western States which is widely recognized as of superior quality or considered as a standard coal for boiler testing. Big Muddy lump, an Illinois coal mined in Jackson County, Ill., is suggested as being of sufficiently high grade to answer these requirements in districts where it is more conveniently obtainable than the other coals mentioned above.

For tests made to determine the performance of a boiler with a particular kind of coal, such as may be specified in a contract for the sale of a boiler, the coal used should not be higher in ash and in moisture than that specified, since increase in ash and moisture above a stated amount is apt to cause a falling off of both capacity and economy in greater proportion than the proportion of such increase.

V. *Establish the correctness of all apparatus* used in the test for weighing and measuring. These are:

1. Scales for weighing coal, ashes, and water.

2. Tanks, or water meters for measuring water. Water meters, as a rule, should only be used as a check on other measurements. For accurate work, the water should be weighed or measured in a tank. (See Chapter VII.)

3. Thermometers and pyrometers for taking temperatures of air, steam, feed-water, waste gases, etc. (Chapter XII.)

4. Pressure-gauges, draught-gauges, etc. (Chapter XI, pages 345 to 369.)

The kind and location of the various pieces of testing apparatus must be left to the judgment of the person conducting the test; always keeping in mind the main object, *i.e.*, to obtain authentic data.

VI. *See that the boiler is thoroughly heated* before the trial to its usual working temperature. If the boiler is new and of a

* These coals are selected because they are about the only coals which possess the essentials of excellence of quality, adaptability to various kinds of furnaces, grates, boilers, and methods of firing, and wide distribution and general accessibility in the markets. See various appendices in Vol. XXI, Transactions A. S. M. E.

form provided with a brick setting, it should be in regular use at least a week before the trial, so as to dry and heat the walls. If it has been laid off and become cold, it should be worked before the trial until the walls are well heated.

VII. *The boiler and connections* should be proved to be free from leaks before beginning a test, and all water connections, including blow and extra feed pipes, should be disconnected, stopped with blank flanges, or bled through special openings beyond the valves, except the particular pipe through which water is to be fed to the boiler during the trial. During the test the blow-off and feed pipes should remain exposed to view.

If an injector is used, it should receive steam directly through a felted pipe from the boiler being tested.*

If the water is metered after it passes the injector, its temperature should be taken at the point where it leaves the injector. If the quantity is determined before it goes to the injector the temperature should be determined on the suction side of the injector, and if no change of temperature occurs other than that due to the injector, the temperature thus determined is properly that of the feed-water. When the temperature changes between the injector and the boiler, as by the use of a heater or by radiation, the temperature at which the water enters and leaves the injector and that at which it enters the boiler should all be taken. In that case the weight to be used is that of the water leaving the injector, computed from the heat units if not directly measured, and the temperature, that of the water entering the boiler.

Let w = weight of water entering the injector.
x = " " steam " " "
h_1 = heat units per pound of water entering injector.
h_2 = " " " " " steam " "
h_3 = " " " " " water leaving "

Then, $w + x$ = weight of water leaving injector.

$$x = w \frac{h_3 - h_1}{h_2 - h_3}.$$

* In feeding a boiler undergoing test with an injector taking steam from another boiler, or from the main steam pipe from several boilers, the evaporative results may be modified by a difference in the quality of the steam from such source compared with that supplied by the boiler being tested, and in some cases the connection to the injector may act as a drip for the main steam pipe. If it is known that the steam from the main pipe is of the same pressure and quality as that furnished by the boiler undergoing the test, the steam may be taken from such main pipe.

See that the steam main is so arranged that water of condensation cannot run back into the boiler.

VIII. *Duration of the Test.*—For tests made to ascertain either the maximum economy or the maximum capacity of a boiler, irrespective of the particular class of service for which it is regularly used, the duration should be at least 10 hours of continuous running. If the rate of combustion exceeds 25 pounds of coal per square foot of grate surface per hour, it may be stopped when a total of 250 pounds of coal has been burned per square foot of grate.

In cases where the service requires continuous running for the whole 24 hours of the day, with shifts of firemen a number of times during that period, it is well to continue the test for at least 24 hours.

When it is desired to ascertain the performance under the working conditions of practical running, whether the boiler be regularly in use 24 hours a day or only a certain number of hours out of each 24, the fires being banked the balance of the time, the duration should not be less than 24 hours.

IX. *Starting and Stopping a Test.*—The conditions of the boiler and furnace in all respects should be, as nearly as possible, the same at the end as at the beginning of the test. The steam pressure should be the same; the water level the same; the fire upon the grates should be the same in quantity and condition; and the walls, flues, etc., should be of the same temperature. Two methods of obtaining the desired equality of conditions of the fire may be used, viz.: those which were called in the Code of 1885 "the standard method" and "the alternate method," the latter being employed where it is inconvenient to make use of the standard method.*

X. *Standard Method of Starting and Stopping a Test.*—Steam being raised to the working pressure, remove rapidly all the fire from the grate, close the damper, clean the ash pit, and as quickly as possible start a new fire with weighed wood and coal, noting the time and the water level† while

* The Committee concludes that it is best to retain the designations "standard" and "alternate," since they have become widely known and established in the minds of engineers and in the reprints of the Code of 1885. Many engineers prefer the "alternate" to the "standard" method on account of its being less liable to error due to cooling of the boiler at the beginning and end of a test.

† The gauge-glass should not be blown out within an hour before the water level is taken at the beginning and end of a test, otherwise an error in the reading of the water level may be caused by a change in the temperature and density of the water in the pipe leading from the bottom of the glass into the boiler.

the water is in a quiescent state, just before lighting the fire.

At the end of the test remove the whole fire, which has been burned low, clean the grates and ash pit, and note the water level when the water is in a quiescent state, and record the time of hauling the fire. The water level should be as nearly as possible the same as at the beginning of the test. If it is not the same, a correction should be made by computation, and not by operating the pump after the test is completed.

XI. *Alternate Method of Starting and Stopping a Test.*—The boiler being thoroughly heated by a preliminary run, the fires are to be burned low and well cleaned. Note the amount of coal left on the grate as nearly as it can be estimated; note the pressure of steam and the water level. Note the time, and record it as the starting time. Fresh coal which has been weighed should now be fired. The ash pits should be thoroughly cleaned at once after starting. Before the end of the test the fires should be burned low, just as before the start, and the fires cleaned in such a manner as to leave a bed of coal on the grates of the same depth, and in the same condition, as at the start. When this stage is reached, note the time and record it as the stopping time. The water level and steam pressures should previously be brought as nearly as possible to the same point as at the start. If the water level is not the same as at the start, a correction should be made by computation, and not by operating the pump after the test is completed.

XII. *Uniformity of Conditions.*—In all trials made to ascertain maximum economy or capacity, the conditions should be maintained uniformly constant. Arrangements should be made to dispose of the steam so that the rate of evaporation may be kept the same from beginning to end. This may be accomplished in a single boiler by carrying the steam through a waste steam pipe, the discharge from which can be regulated as desired. In a battery of boilers, in which only one is tested, the draft may be regulated on the remaining boilers, leaving the test boiler to work under a constant rate of production.

Uniformity of conditions should prevail as to the pressure of steam, the height of water, the rate of evaporation, the thickness of fire, the times of firing and quantity of coal fired at one time, and as to the intervals between the times of cleaning the fires.

The method of firing to be carried on in such tests should be dictated by the expert or person in responsible charge of the test, and the method adopted should be adhered to by the fireman throughout the test.

XIII. *Keeping the Records.*—Take note of every event connected with the progress of the trial, however unimportant it may appear. Record the time of every occurrence and the time of taking every weight and every observation.

The coal should be weighed and delivered to the fireman in equal proportions, each sufficient for not more than one hour's run, and a fresh portion should not be delivered until the previous one has all been fired. The time required to consume each portion should be noted, the time being recorded at the instant of firing the last of each portion. It is desirable that at the same time the amount of water fed into the boiler should be accurately noted and recorded, including the height of the water in the boiler, and the average pressure of steam and temperature of feed during the time. By thus recording the amount of water evaporated by successive portions of coal, the test may be divided into several periods if desired, and the degree of uniformity of combustion, evaporation, and economy analyzed for each period. In addition to these records of the coal and the feed water, half hourly observations should be made of the temperature of the feed water, of the flue gases, of the external air in the boiler-room, of the temperature of the furnace when a furnace pyrometer is used, also of the pressure of steam, and of the readings of the instruments for determining the moisture in the steam. A log should be kept on properly prepared blanks containing columns for record of the various observations.

When the "standard method" of starting and stopping the test is used, the hourly rate of combustion and of evaporation and the horse-power should be computed from the records taken during the time when the fires are in active condition. This time is somewhat less than the actual time which elapses between the beginning and end of the run. The loss of time due to kindling the fire at the beginning and burning it out at the end makes this course necessary.

XIV. *Quality of Steam.*—The percentage of moisture in the steam should be determined by the use of either a throttling or

a separating steam calorimeter. The sampling nozzle should be placed in the vertical steam pipe rising from the boiler. It should be made of ½-inch pipe, and should extend across the diameter of the steam pipe to within half an inch of the opposite side, being closed at the end and perforated with not less than twenty ⅛-inch holes equally distributed along and around its cylindrical surface, but none of these holes should be nearer than ½ inch to the inner side of the steam pipe. The calorimeter and the pipe leading to it should be well covered with felting. Whenever the indications of the throttling or separating calorimeter show that the percentage of moisture is irregular, or occasionally in excess of three per cent., the results should be checked by a steam separator placed in the steam pipe as close to the boiler as convenient, with a calorimeter in the steam pipe just beyond the outlet from the separator. The drip from the separator should be caught and weighed, and the percentage of moisture computed therefrom added to that shown by the calorimeter. (See Chapter XIII, page 438.))

Superheating should be determined by means of a thermometer placed in a mercury well inserted in the steam pipe. The degree of superheating should be taken as the difference between the reading of the thermometer for superheated steam and the readings of the same thermometer for saturated steam at the same pressure as determined by a special experiment, and not by reference to steam tables.

For calculations relating to quality of steam and corrections for quality of steam, see Chapter XIII, pages 393 and 435.

XV. *Sampling the Coal and Determining its Moisture.*—As each barrow load or fresh portion of coal is taken from the coal pile, a representative shovelful is selected from it and placed in a barrel or box in a cool place and kept until the end of the trial. The samples are then mixed and broken into pieces not exceeding one inch in diameter, and reduced by the process of repeated quartering and crushing until a final sample weighing about five pounds is obtained, and the size of the larger pieces is such that they will pass through a sieve with ¼-inch meshes. From this sample two one-quart, air-tight glass preserving jars, or other air-tight vessels which will prevent the escape of moisture from the sample, are to be promptly filled, and these samples are to be kept for subsequent determinations of moisture and of heating value and for chemical analyses. During the

process of quartering, when the sample has been reduced to about 100 pounds, a quarter to a half of it may be taken for an approximate determination of moisture. This may be made by placing it in a shallow iron pan, not over three inches deep, carefully weighing it, and setting the pan in the hottest place that can be found on the brickwork of the boiler setting or flues, keeping it there for at least 12 hours, and then weighing it. The determination of moisture thus made is believed to be approximately accurate for anthracite and semi-bituminous coals, and also for Pittsburg or Youghiogheny coal; but it cannot be relied upon for coals mined west of Pittsburg, or for other coals containing inherent moisture. For these latter coals it is important that a more accurate method be adopted. The method recommended by the Committee for all accurate tests, whatever the character of the coal, is described as follows:

Take one of the samples contained in the glass jars, and subject it to a thorough air-drying, by spreading it in a thin layer and exposing it for several hours to the atmosphere of a warm room, weighing it before and after, thereby determining the quantity of surface moisture it contains. Then crush the whole of it by running it through an ordinary coffee mill adjusted so as to produce somewhat coarse grains (less than $\frac{1}{8}$-inch), thoroughly mix the crushed sample, select from it a portion of from 10 to 50 grams, weigh it in a balance which will easily show a variation as small as 1 part in 1,000, and dry it in an air or sand bath at a temperature between 240 and 280 degrees Fahr. for one hour. Weigh it and record the loss, then heat and weigh it again repeatedly, at intervals of an hour or less, until the minimum weight has been reached and the weight begins to increase by oxidation of a portion of the coal. The difference between the original and the minimum weight is taken as the moisture in the air-dried coal. This moisture test should preferably be made on duplicate samples, and the results should agree within 0.3 to 0.4 of one per cent., the mean of the two determinations being taken as the correct result. The sum of the percentage of moisture thus found and the percentage of surface moisture previously determined is the total moisture.

XVI. *Treatment of Ashes and Refuse.*—The ashes and refuse are to be weighed in a dry state. If it is found desirable to show the principal characteristics of the ash, a sample should be subjected to a proximate analysis and the actual amount

of incombustible material determined. For elaborate trials a complete analysis of the ash and refuse should be made.

XVII. *Calorific Tests and Analysis of Coal.*—The quality of the fuel should be determined either by heat test or by analysis, or by both.

The rational method of determining the total heat of combustion is to burn the sample of coal in an atmosphere of oxygen gas, the coal to be sampled as directed in Article XV. of this code. (See Chapter XIV.)

The chemical analysis of the coal should be made only by an expert chemist. The total heat of combustion computed from the results of the ultimate analysis may be obtained by the use of Dulong's formula (with constants modified by recent determinations), viz.: $14{,}600\ C + 62{,}000\left(H - \frac{O}{8}\right) + 4{,}000\ S$, in which C, H, O, and S refer to the proportions of carbon, hydrogen, oxygen, and sulphur respectively, as determined by the ultimate analysis.*

It is desirable that a proximate analysis should be made, thereby determining the relative proportions of volatile matter and fixed carbon. These proportions furnish an indication of the leading characteristics of the fuel, and serve to fix the class to which it belongs. (Page 470.) As an additional indication of the characteristics of the fuel, the specific gravity should be determined.

XVIII. *Analysis of Flue Gases.*—The analysis of the flue gases is an especially valuable method of determining the relative value of different methods of firing, or of different kinds of furnaces. In making these analyses great care should be taken to procure average samples—since the composition is apt to vary at different points of the flue pages 475 to 492). The composition is also apt to vary from minute to minute, and for this reason the drawings of gas should last a considerable period of time. Where complete determinations are desired, the analyses should be intrusted to an expert chemist. For approximate determinations the Orsat† or the Hempel‡ apparatus may be used by the engineer. (See pages 481 and 483.)

* Favre and Silberman give 14,544 B.T.U. per pound carbon; Berthelot 14,647 B.T.U. Favre and Silberman give 62,032 B.T.U. per pound hydrogen; Thomsen 61,816 B.T.U.

† See R. S. Hale's paper on "Flue Gas Analysis," *Transactions*, vol. xviii., p. 901.

‡ See Hempel's "Methods of Gas Analysis" (Macmillan & Co.).

For the continuous indication of the amount of carbonic acid present in the flue gases, an instrument may be employed which shows the weight of the sample of gas passing through it.

XIX. *Smoke Observations.*—It is desirable to have a uniform system of determining and recording the quantity of smoke produced where bituminous coal is used. The system commonly employed is to express the degree of smokiness by means of percentages dependent upon the judgment of the observer. The Committee does not place much value upon a percentage method, because it depends so largely upon the personal element, but if this method is used, it is desirable that, so far as possible, a definition be given in explicit terms as to the basis and method employed in arriving at the percentage. The actual measurement of a sample of soot and smoke by some form of meter is to be preferred. (See Appendices XXXIV. and XXXV.)

XX. *Miscellaneous.*—In tests for purposes of scientific research, in which the determination of all the variables entering into the test is desired, certain observations should be made which are in general unnecessary for ordinary tests. These are the measurement of the air supply, the determination of its contained moisture, the determination of the amount of heat lost by radiation, of the amount of infiltration of air through the setting, and (by condensation of all the steam made by the boiler) of the total heat imparted to the water.

As these determinations are rarely undertaken, it is not deemed advisable to give directions for making them.

XXI. *Calculations of Efficiency.*—Two methods of defining and calculating the efficiency of a boiler are recommended. They are:

1. Efficiency of the boiler $= \dfrac{\text{Heat absorbed per lb. combustible}}{\text{Calorific value of 1 lb. combustible}}$

2. Efficiency of the boiler and grate $= \dfrac{\text{Heat absorbed per lb. coal}}{\text{Calorific value of 1 lb. coal}}$

The first of these is sometimes called the efficiency based on combustible, and the second the efficiency based on coal. The first is recommended as a standard of comparison for all tests, and this is the one which is understood to be referred to when the word "efficiency" alone is used without qualification. The second, however, should be included in a report of a test, together with the first, whenever the object of the test is to determine the efficiency of the boiler and furnace together with the

grate (or mechanical stoker), or to compare different furnaces, grates, fuels, or methods of firing.

The heat absorbed per pound of combustible (or per pound coal) is to be calculated by multiplying the equivalent evaporation from and at 212 degrees per pound combustible (or coal) by 965.7.

XXII. *The Heat Balance.*—An approximate "heat balance," or statement of the distribution of the heating value of the coal among the several items of heat utilized and heat lost may be included in the report of a test when analyses of the fuel and of the chimney gases have been made. It should be reported in the following form:

HEAT BALANCE, OR DISTRIBUTION OF THE HEATING VALUE OF THE COMBUSTIBLE.

Total Heat Value of 1 lb. of Combustible.....B. T. U.

		B. T. U.	Per Cent.
1.	Heat absorbed by the boiler = evaporation from and at 212 degrees per pound of combustible × 965.7.		
2.	Loss due to moisture in coal = per cent. of moisture referred to combustible ÷ 100 × [(212 − t) + 966 + 0.48 (T − 212)] (t = temperature of air in the boiler-room, T = that of the flue gases)		
3.	Loss due to moisture formed by the burning of hydrogen = per cent. of hydrogen to combustible ÷ 100 × 9 × [(212 − t) + 966 + 0.48 (T − 212)].		
4.*	Loss due to heat carried away in the dry chimney gases = weight of gas per pound of combustible × 0.24 × (T − t).		
5.†	Loss due to incomplete combustion of carbon = $\frac{CO}{CO_2 + CO} \times \frac{\text{per cent. C in combustible}}{100} \times 10{,}150$.		
6.	Loss due to unconsumed hydrogen and hydrocarbons, to heating the moisture in the air, to radiation, and unaccounted for. (Some of these losses may be separately itemized if data are obtained from which they may be calculated.)		
	Totals.....		100.00

*The weight of gas per pound of carbon burned may be calculated from the gas analyses as follows:

Dry gas per pound carbon = $\frac{11\ CO_2 + 8\ O + 7\ (CO + N)}{3\ (CO_2 + CO)}$, in which CO_2, CO, O, and N are the percentages by volume of the several gases. As the sampling and analyses of the gases in the present state of the art are liable to considerable errors, the result of this calculation is usually only an approximate one. The heat balance itself is also only approximate for this reason, as well as for the fact that it is not possible to determine accurately the percentage of unburned hydrogen or hydrocarbons in the flue gases.

The weight of dry gas per pound of combustible is found by multiplying the dry gas per pound of carbon by the percentage of carbon in the combustible, and dividing by 100.

†CO_2 and CO are respectively the percentage by volume of carbonic acid and carbonic oxide in the flue gases. The quantity 10,150 = Number of heat units generated by burning to carbonic acid one pound of carbon contained in carbonic oxide.

XXIII. *Report of the Trial.*—The data and results should be reported in the manner given in either one of the two following

tables, omitting lines where the tests have not been made as elaborately as provided for in such tables. Additional lines may be added for data relating to the specific object of the test. The extra lines should be classified under the headings provided in the tables, and numbered as per preceding line, with sub letters *a*, *b*, etc. The Short Form of Report, Table No. 2, is recommended for commercial tests and as a convenient form of abridging the longer form for publication when saving of space is desirable.† For elaborate trials, it is recommended that the full log of the trial be shown graphically, by means of a chart. (See page 495.)

TABLE NO. 1.

DATA AND RESULTS OF EVAPORATIVE TEST,

Arranged in accordance with the Complete Form advised by the Boiler Test Committee of the American Society of Mechanical Engineers. Code of 1899.

Made by..... .....of.....boiler at.....to determine.....
.....
Principal conditions governing the trial .....
.....
.....
Kind of fuel * .....
Kind of furnace .....
State of the weather.....

Method of starting and stopping the test ("standard" or "alternate," Art. X. and XI., Code).....

1. *Date of trial* .....
2. *Duration of trial*..... hours.

Dimensions and Proportions.

(A complete description of the boiler, and drawings of the same if of unusual type, should be given on an annexed sheet. (See Appendix X.)

3. *Grate surface* .....*width*.....*length*.....*area*..... sq. ft.
4. Height of furnace..... ins.
5. Approximate width of air spaces in grate..... in.
6. Proportion of air space to whole grate surface..... per cent.
7. *Water-heating surface*..... sq. ft.
8. *Superheating surface*..... "
9. Ratio of water-heating surface to grate surface..... — to 1.
10. Ratio of minimum draft area to grate surface ..... 1 to —

* The items printed in italics correspond to the items in the "Short Form of Code."

† Also see short form on page 513, used in Cornell University.

Average Pressures.

11.	*Steam pressure by gauge*	lbs. per sq. in
12.	*Force of draft between damper and boiler*	ins. of water
13.	Force of draft in furnace	" "
14.	Force of draft or blast in ashpit	" "

Average Temperatures.

15.	Of external air	deg.
16.	Of fireroom	"
17.	Of steam	"
18.	Of feed water entering heater	"
19.	Of feed water entering economizer	"
20.	*Of feed water entering boiler*	"
21.	*Of escaping gases from boiler*	"
22.	Of escaping gases from economizer	"

Fuel.

23.	Size and condition	
24.	Weight of wood used in lighting fire	lbs.
25.	*Weight of coal as fired**	"
26.	*Percentage of moisture in coal* †	per cent.
27.	*Total weight of dry coal consumed*	lbs.
28.	*Total ash and refuse*	"
29.	Quality of ash and refuse	
30.	Total combustible consumed	lbs.
31.	*Percentage of ash and refuse in dry coal*	per cent.

Proximate Analysis of Coal.

(App. XII.)

		Of Coal.	Of Combustible.
		per cent.	per cent.
32.	Fixed carbon	"	"
33.	Volatile matter	"	—
34.	Moisture	"	—
35.	Ash		
		100 per cent.	100 per cent.
36.	Sulphur, separately determined	"	"

* Including equivalent of wood used in lighting the fire, not including unburnt coal withdrawn from furnace at times of cleaning and at end of test. One pound of wood is taken to be equal to 0.4 pound of coal, or, in case greater accuracy is desired, as having a heat value equivalent to the evaporation of 6 pounds of water from and at 212 degrees per pound. (6 × 965.7 = 5,794 B. T. U.) The term "as fired" means in its actual condition, including moisture.

† This is the total moisture in the coal as found by drying it artificially, as described in Art. XV. of Code.

Ultimate Analysis of Dry Coal.

(Art. XVII., Code.)

	Of Coal.	Of Combustible.
7. Carbon (C)	per cent.	per cent.
8. Hydrogen (H)	"	"
9. Oxygen (O)	"	"
0. Nitrogen (N)	"	"
1. Sulphur (S)	"	"
2. Ash	"	—
	100 per cent.	100 per cent.
3. Moisture in sample of coal as received	"	"

Analysis of Ash and Refuse.

4. Carbon	per cent.
5. Earthy matter	"

Fuel per Hour.

6. *Dry coal consumed per hour*	lbs.
7. Combustible consumed per hour	"
8. *Dry coal per square foot of grate surface per hour*	"
9. Combustible per square foot of water-heating surface per hour.	"

Calorific Value of Fuel.

(Art. XVII., Code.)

0. *Calorific value by oxygen calorimeter, per lb. of dry coal*	B.T.U.
1. *Calorific value by oxygen calorimeter, per lb. of combustible*	"
2. Calorific value by analysis, per lb. of dry coal*	"
3. Calorific value by analysis, per lb. of combustible	"

Quality of Steam.

(App. XV. to XIX.)

4. *Percentage of moisture in steam*	per cent.
5. *Number of degrees of superheating*	deg.
6. Quality of steam (dry steam = unity). (For exact determination of the factor of correction for quality of steam see Appendix XVIII.)	

Water.

(App. I., IV., VII., VIII.)

7. *Total weight of water fed to boiler* †	lbs.
8. Equivalent water fed to boiler from and at 212 degrees	"
9. *Water actually evaporated, corrected for quality of steam*	"

* See formula for calorific value under Article XVII. of Code.

† Corrected for inequality of water level and of steam pressure at beginning and end of test.

60. Factor of evaporation *..... lbs.
61. Equivalent water evaporated into dry steam from and at 212 degrees. † (Item 59 × Item 60.)..... "

Water per Hour.

62. *Water evaporated per hour, corrected for quality of steam* ..... "
63. *Equivalent evaporation per hour from and at* 212 *degrees* †..... "
64. *Equivalent evaporation per hour from and at* 212 *degrees per square foot of water-heating surface* †..... "

Horse-Power.

65. *Horse-power developed.* (34½ *lbs. of water evaporated per hour into dry steam from and at* 212 *degrees, equals one horse-power*) ‡..... H. P.
66. *Builders' rated horse-power*..... "
67. *Percentage of builders' rated horse-power developed*..... per cent.

Economic Results.

68. *Water apparently evaporated under actual conditions per pound of coal as fired.* (*Item* 57 ÷ *Item* 25.)..... lbs.
69. *Equivalent evaporation from and at* 212 *degrees per pound of coal as fired.* † (*Item* 61 ÷ *Item* 25.)..... "
70. *Equivalent evaporation from and at* 212 *degrees per pound of dry coal.* † (*Item* 61 ÷ *Item* 27.)..... "
71. *Equivalent evaporation from and at* 212 *degrees per pound of combustible.* † (*Item* 61 ÷ *Item* 30.)..... "

(If the equivalent evaporation, Items 69, 70, and 71, is not corrected for the quality of steam, the fact should be stated).

Efficiency.

(Art. XXI., Code.)

72. *Efficiency of the boiler; heat absorbed by the boiler per lb. of combustible divided by the heat value of one lb. of combustible* §..... per cent.
73. *Efficiency of boiler, including the grate; heat absorbed by the boiler, per lb. of dry coal, divided by the heat value of one lb. of dry coal*..... "

---

* Factor of evaporation $= \frac{H-h}{965.7}$, in which H and h are respectively the total heat in steam of the average observed pressure, and in water of the average observed temperature of the feed.

† The symbol "U. E." meaning "Units of Evaporation," may be conveniently substituted for the expression "Equivalent water evaporated into dry steam from and at 212 degrees," its definition being given in a foot-note.

‡ Held to be the equivalent of 30 lbs. of water per hour evaporated from 100 degrees Fahr. into dry steam at 70 lbs. gauge pressure. (See page 494.)

§ In all cases where the word combustible is used, it means the coal without moisture and ash, but including all other constituents. It is the same as what is called in Europe "coal dry and free from ash."

Cost of Evaporation.

74. *Cost of coal per ton of —— lbs. delivered in boiler room*..... $
75. Cost of fuel for evaporating 1,000 lbs of water under observed conditions ..... $
76. *Cost of fuel used for evaporating* 1,000 *lbs. of water from and at* 212 *degrees* ..... $

Smoke Observations.

(App. XXXIV. and XXXV.)

77. Percentage of smoke as observed ..... per cent.
78. Weight of soot per hour obtained from smoke meter..... ounces.
79. Volume of soot per hour obtained from smoke meter ..... cub. in.

Methods of Firing.

80. Kind of firing (spreading, alternate, or coking).....
81. Average thickness of fire.....
82. Average intervals between firings for each furnace during time when fires are in normal condition .....
83. Average interval between times of levelling or breaking up....

Analyses of the Dry Gases.

84. Carbon dioxide (CO_2)..... per cent.
85. Oxygen (O)..... "
86. Carbon monoxide (CO) ..... "
87. Hydrogen and hydrocarbons..... "
88. Nitrogen (by difference) (N) ..... "

100 per cent.

TABLE NO. 2.

DATA AND RESULTS OF EVAPORATIVE TEST,

Arranged in accordance with the Short Form advised by the Boiler Test Committee of the American Society of Mechanical Engineers. Code of 1899.

Made by.....on.....boiler, at.....to determine.....
Kind of fuel.....
Kind of furnace.....
Method of starting and stopping the test ("standard" or "alternate," Art. X. and XI., Code).....

Grate surface..... sq. ft.
Water-heating surface ..... "
Superheating surface..... "

Total Quantities.

1. Date of trial.....
2. Duration of trial..... hours.
3. Weight of coal as fired*..... lbs.
4. Percentage of moisture in coal*..... per cent.
5. Total weight of dry coal consumed..... lbs.
6. Total ash and refuse..... "
7. Percentage of ash and refuse in dry coal..... per cent.

* See foot-notes of Complete Form.

8.	Total weight of water fed to the boiler *	lbs.
9.	Water actually evaporated, corrected for moisture or superheat in steam	"
10.	Equivalent water evaporated into dry steam from and at 212 degrees *	"

Hourly Quantities.

11.	Dry coal consumed per hour	lbs.
12.	Dry coal per square foot of grate surface per hour	"
13.	Water evaporated per hour corrected for quality of steam	"
14.	Equivalent evaporation per hour from and at 212 degrees *	"
15.	Equivalent evaporation per hour from and at 212 degrees per square foot of water-heating surface *	"

Average Pressures, Temperatures, etc.

16.	Steam pressure by gauge	lbs per sq. in.
17.	Temperature of feed water entering boiler	deg.
18.	Temperature of escaping gases from boiler	"
19.	Force of draft between damper and boiler	ins. of water.
20.	Percentage of moisture in steam, or number of degrees of superheating	per cent. or deg

Horse-Power.

21.	Horse-power developed (Item 14 ÷ 34½) *	H. P.
22.	Builders' rated horse-power	"
23.	Percentage of builders' rated horse-power developed	per cent

Economic Results.

24.	Water apparently evaporated under actual conditions per pound of coal as fired. (Item 8 ÷ Item 3)	lbs
25.	Equivalent evaporation from and at 212 degrees per pound of coal as fired.* (Item 10 ÷ Item 3)	"
26.	Equivalent evaporation from and at 212 degrees per pound of dry coal.* (Item 10 ÷ Item 5)	"
27.	Equivalent evaporation from and at 212 degrees per pound of combustible.* [Item 10 ÷ (Item 5 − Item 6)]	"

(If Items 25, 26, and 27 are not corrected for quality of steam, the fact should be stated.)

Efficiency.

28.	Calorific value of the dry coal per pound	B. T. U.
29.	Calorific value of the combustible per pound	"
30.	Efficiency of boiler (based on combustible) *	per cent.
31.	Efficiency of boiler, including grate (based on dry coal)	"

Cost of Evaporation.

32.	Cost of coal per ton of —— lbs. delivered in boiler-room	$
33.	Cost of coal required for evaporating 1,000 pounds of water from and at 212 degrees	$

* See foot-notes of Complete Form.

376. CONDENSED REPORT OF BOILER-TEST.

(Sibley College, Cornell University.)

LOG OF BOILER-TRIAL.

Made at..... .....
Date..... ..189..
Fireman..... .....

By { .....
.....

REPORT OF BOILER-TEST.

Made by.....
....N. Y., ...189..
Kind of Boiler..... Manufactured by.....

Dimensions.

Grate-surf., length... ....ft.,
width..... ft..... Sq. ft.
Water-heating surface..... "
Superheating surface..... "
Area for draught (calorimeter). "
Area, chimney..... "
Height, chimney.... ..... Ft.
Ratio heating to grate surface.....
Ratio air-space to grate-surface.....

Pressure.

Barometer .....Inches mercury.
Steam-gauge. ..... Pounds.
Draught-gauge.....Inches water.
Absolute steam-pressure....Pounds.

Temperature.

External air.....Degrees F.
Boiler-room..... .... "
Flue..... "
Furnace ..... "
Feed-water..... ..... "
Steam..... "

Fuel.

Total coal consumed.....Pounds.
Moisture in coal.....Per cent.
Dry coal consumed..... ... Pounds.
Total refuse, dry..... "
Total refuse, dry... ..... Per cent.
Total combustible..... ... Pounds.

Fuel per Hour

Dry coal per hour..... "
Combustible per hour..... "
Dry coal per square foot of grate..... "
Combustible per square foot of grate.. .. .. "
Dry coal per square foot of grate ....Heating-surface.
Combustible per square foot of grate. .....Heating-surface.
Quality of steam ... .Per cent.
Superheat .....Degrees.

Total Water.

Total weight water used....Pounds.
(by meter)... Cu. ft.
Total evap., dry steam. ....Pounds.
Factor of evaporation. ....
Total from and at 212°.... Pounds.

Water per Hr.

Amount used.... .....Pounds.
Evaporated, dry steam..... "
Evap. from and at 212°..... "

Evaporation.

Per Pound of Fuel.

Actual..... ....Pounds.
Equiv. from and at 212°..... "

Per Pound of Combustible.

Actual.....Pounds.
Equiv. from and at 212°..... "

Per Sq. Ft. Heating-surface per Hr.

Actual. ....Pounds.
Equiv. from and at 212°..... "

From 100° F. to 70 Pounds by Gauge.

Per Pound of Fuel .....Pounds.
Per Pound of Combustible... "
Per ½-pound of Fuel..... "

Evaporation per Hour.

Per Square Foot of Grate.

Actual, from feed-water temperature..... ..... .Pounds.
Equiv. from and at 212°.... "

Per Sq. Ft. of Water-heating Surface.

Actual..... .....Pounds.
Equiv. from and at 212°..... "

Per Sq. Ft. of Least Draught-area.

Actual..... .....Pounds.
Equiv. from and at 212°..... "

H. P.

* On basis 34½ lbs. equiv. evap. per hour.....H. P.
Builders' rating... .... "
Ratio of commercial to builders' rating..... ....
Heat generated per hour... B. T. U.
Heat absorbed per hour .... "
Efficiency of boiler. .....Per cent.
Efficiency of furnace .... . "

NOTE.—Actual evaporation signifies the evaporation from feed-water temperature to dry steam at gauge-pressure. It is apparent evaporation corrected for calorimeter-determination.

* Standard Commercial H. P.

377. Abbreviated Directions for Boiler-testing.—*Apparatus.*—As in standard tests: tanks and scales for weighing water; meter for measuring water; apparatus for flue-gas analysis; barometer and pyrometer.

Directions.—Calibrate all apparatus, meters, scales, thermometers, and gauges; arrange throttling or separator calorimeter to obtain quality of steam delivered. Note condition of Boiler and Furnace Rules, VII–IX. Start and close the test either by standard or alternative method, Rules X and XI. During test proceed as in Rules XIII and XIV. Continue the test as long as time will permit, at least four hours, taking simultaneous observations each 15 minutes at a signal given by a whistle; keep record so that coal and water consumption can be computed for each hour.

Put 100 pounds of coal in a box and dry in a hot place for 24 hours; if ashes are damp from use of a steam-blower, dry a sample of 100 pounds in same manner. In general, ashes may be removed at once and weighed.

Report and Computation.—Make report on standard forms submitted and compute the required quantities. Submit with report a *graphical log*, in which time is taken as abscissa, and the various observed quantities as ordinates.

Revised Code for Boiler-testing.—At the meeting of the American Society of Mechanical Engineers in December, 1899, a revised code for boiler-testing was presented before the society by a special committee appointed for that purpose. The new code is given in the Appendix to this volume; it differs from the old one principally in the use of improved methods.

CHAPTER XVI.

THE STEAM-ENGINE INDICATOR.

378. Uses of the Steam-engine Indicator.—The steam-engine indicator is an instrument for drawing a diagram on paper which shall accurately represent the various changes of pressure on one side of the piston of the steam-engine during both the forward and return stroke.

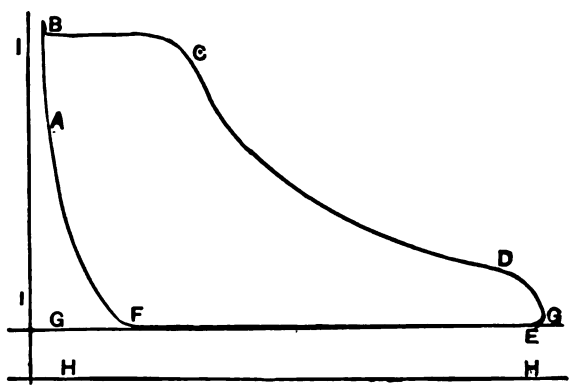

FIG 226.—THE INDICATOR-DIAGRAM.

The general form of the indicator-diagram is shown in Fig. 226; the ordinates of the diagram, measured from the line *GG*, are proportional to the pressure per square inch above the atmosphere; measured from the line *HH*, are proportional to the absolute pressure per square inch acting on the piston. The abscissa corresponding to any ordinate is proportional to the distance moved by the piston. *ABCDE* is the line drawn during the forward stroke of the engine, *EFA* that drawn during the return stroke. The ordinates to the line *ABCDE* represent the pressures acting to move the piston forward; those to the line *EFA* represent the pressures acting to retard or

stop the motion of the piston on its back stroke. The ordinates intercepted between the lines represent the effective pressure acting to urge the piston forward. Since the abscissæ of the diagram are proportional to the space passed through by the piston, and the intercepted ordinate to the effective pressure acting on the piston, the area of the diagram must be proportional to the work done by the steam on one side of the piston, acting on a unit of area and during both forward and return stroke. (See Article 21, page 21.)

From this diagram can be obtained, by processes to be explained later: 1. The quantity of power developed in the cylinder, and the quantity lost in various ways,—by wire-drawing, by back pressure, by premature release, by mal-adjustment of valves, leakage, etc.

2. The redistribution of horizontal pressures at the crank-pin, through the momentum and inertia of the reciprocating parts, and the angular distribution of the tangential component of the horizontal pressure; in other words, the rotative effect around the path of the crank.

3. Taken in combination with measurements of feed-water or of the exhaust steam, with the amount and temperatures of condensing water, the indicator furnishes opportunities for measuring the heat losses which occur at different points during the stroke.

4. The indicator-diagram also shows the position of the piston at times when the valve-motion opens or closes the steam and exhaust ports of the engine. It also furnishes information regarding the general condition of the engine, and the arrangement of the valves, adequacy of the ports and passages, and of the steam or the exhaust pipes.

379. Indicated and Dynamometric Power.—The steam-engine indicator is used in all steam-engine tests to measure the force of the steam acting on a unit of area of the piston. A dynamometer of the absorbing or transmission type (see pages 235 to 250) is used to measure the work delivered by the steam-engine. The work of the engine is usually expressed in horse-power; one horse-power being equivalent to 33,000 foot-pounds

per minute. The work shown by the steam-engine indicator-diagram is termed the *Indicated horse-power* (I.H.P.); that shown by the dynamometer, *Dynamometric horse-power* (D.H.P.).

The mean effective pressure per unit of area acting on the piston is obtained from the indicator-diagram this quantity, multiplied by the area of the piston and the distance travelled by the piston in feet per minute, will give the work in foot pounds. Thus let p equal the mean effective pressure, l the length of stroke of the engine in feet, n the number of revolutions, a the area of the piston in square inches. Then the work done per minute by the steam acting on one side of the piston, in horse-power, is

$$plan \div 33{,}000.$$

380. Early Forms of the Steam-engine Indicator.—*Watt and McNaught.*—The steam-engine indicator was invented by James Watt, and was extensively used by him in perfecting his engine. The indicator of Watt,* as used in 1814, consisted of a small steam-cylinder *AA*, as shown in Fig. 227, in which a piston was moved by the steam-pressure, against the resistance of a spring *FC*. The end of the piston-rod carried a pencil, which was made to press against a sheet of paper *DD*, moved backward and forward in conformity to the motion of the piston. By this method a diagram was produced similar to that shown in Fig. 227.

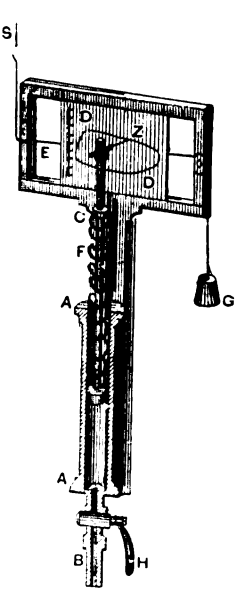

FIG. 227.—THE WATT INDICATOR.

McNaught's indicator, which succeeded that of Watt and was in general use until about 1860, differed from the form used by Watt principally in the use of a vertical cylinder instead of the sliding panel, which was turned backward and forward on a vertical axis, in conformity to the motion of the piston

* See Thurston's Engine and Boiler Trials, page 130.

381. The Richards Indicator.*—The Richards indicator was invented by Professor C. B. Richards about 1860; it contains every essential constructive feature found in recent indicators, and may be considered the prototype from which all other indicators differ simply in details of workmanship, form, and size of parts.

The construction of this indicator is well shown in Fig. 228

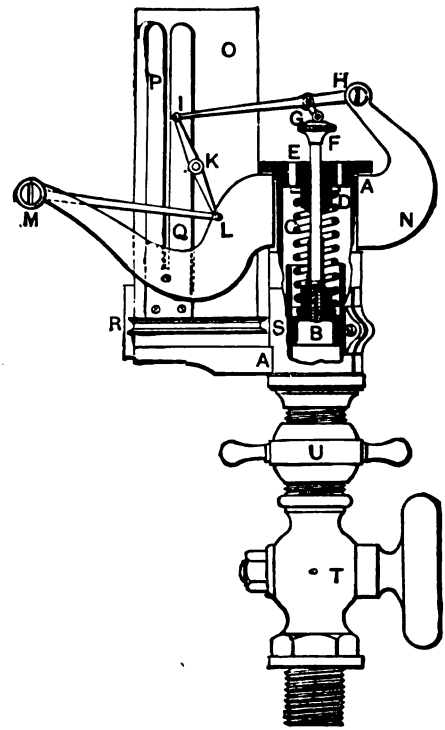

FIG. 228.—THE RICHARDS INDICATOR.

from which it is seen to consist of a steam-cylinder *AA*, in which is a piston *B*, connected by a rigid rod with the cap *F*. The movement of the piston is resisted by the spring *CD* in such a manner that its motion in either direction is proportional to the pressure. The motion of the piston-rod is transferred to a pencil at *K*, by links which are so arranged that the pencil

* See the Richards Indicator, by C. B. Porter; New York, D. Van Nostrand

moves parallel to the piston B, but through a considerably greater range. The indicator-spring can be taken out by unscrewing the cap E, removing the top of the instrument and unscrewing the piston B, and another spring with a different tension can be substituted. The drum OR is made of light metal, mounted on a vertical axis, and provided with a spring arranged to resist rotation. The drum is connected to the cross-head or reducing motion by a cord, and is given a motion in one direction by the tension transmitted through the cord and in a reverse direction by the indicator drum-spring. The paper on which the diagram is to be drawn is wrapped smoothly around the drum OQ, being held in place by the clips PQ. The indicator is connected to the steam-cylinder by a pipe leading to the clearance-space of the engine; a cock, T, being screwed into this pipe, and the indicator connected to the cock by the coupling U.

382. The Thompson Indicator.—This indicator is shown in Figs. 229 and 230. It differs from the Richards indicator

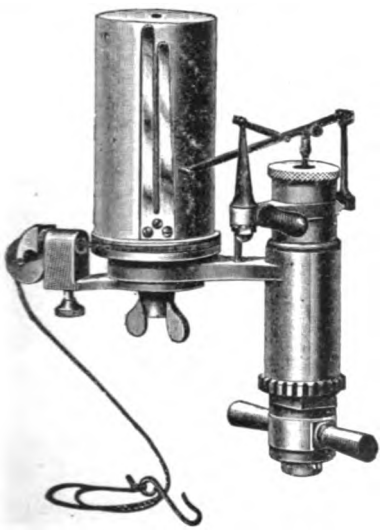

FIG. 229.—THE THOMPSON INDICATOR.

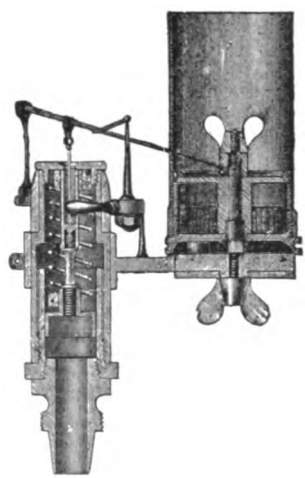

FIG. 230.—SECTION OF THOMPSON INDICATOR.

principally in the form of the parallel motion, form of indicator-spring, and details of workmanship. The parts of the instru-

ment are much lighter, and it is better adapted for use on high-speed engines.

The use is essentially the same as the Richards; the method of *changing springs* should be thoroughly understood, and is as follows: Unscrew the milled-edged cap at the top of steam-cylinder; then take out piston, with arm and connections; disconnect pencil-lever and piston by unscrewing the small milled-headed screw which connects them; remove the spring from the piston, substitute the one desired, and put together in same manner, being careful, of course, to screw the spring up firmly against cap and well down to the piston-head. The method of changing springs is simple, easy, and convenient, and does not require the use of any wrench or pin of any kind.

383. The Tabor Indicator.—The Tabor indicator, shown in Figs. 231 and 232, in the form now manufactured differs from other indicators principally in producing the parallel

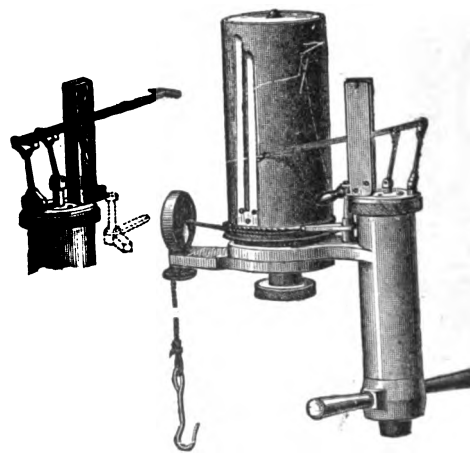

FIG. 231.—THE TABOR INDICATOR.

motion of the pencil by a pin moving in a peculiarly-shaped slot. It also differs in details of construction and in form of the indicator-spring; the pencil-point being arranged to move not only parallel to the piston, but uniformly five times as fast as the piston at every part of the range.

The method of *changing springs* in the Tabor indicator is as follows: Remove the cover of the cylinder, remove the screw beneath the piston, unscrew the piston from the spring and the spring from the cover, and replace the spring desired. When the lower end of the piston-rod is introduced into the square hole in the centre of the piston, care must be taken that it sets fairly in the hole before the screw is applied. Unless such care is observed, the corners may catch and cause derangement. The *tension on the drum-spring* may be varied by removing the paper drum, loosening the thumb-screw which encircles the central shaft, lifting the drum-carriage so as to clear the stop, and then winding the carriage in the direction desired.

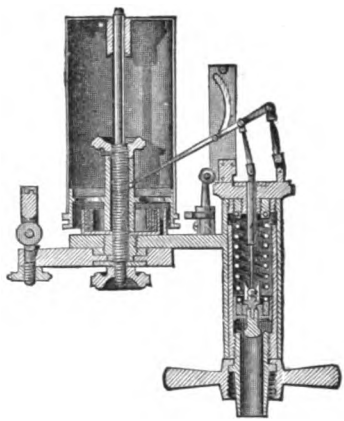

FIG. 232.—SECTION OF TABOR INDICATOR.

384. The Crosby Indicator.—The Crosby indicator as at present constructed is shown in Figs. 233 and 234. It differs from those already described in the form of piston- and drum-springs and in the arrangement for producing accurate parallel motion.

The special directions for this instrument are given by the manufacturers as follows:

To *remove the piston*, spring, etc., unscrew the cap, then, by the sleeve, lift all the connected parts free. This gives full access to the parts to clean and oil them.

To *detach the spring*, unscrew the cap from spring-head, then unscrew piston-rod from swivel-head, then, with the hollow slotted wrench, unscrew the piston-rod from the piston. To attach a spring, simply reverse this process. Before setting the foot of the spring unscrew *G* slightly, then, after the piston-rod has been firmly screwed down to its shoulder, set *G* up firmly against the bead, and thereby take up all lost motion.

It is often desirable to *change the position of the atmospheric*

line on the paper. This can easily be done by unscrewing the cap from the cylinder and raising the sleeve *BB* which carries the pencil-movement. Then turn the cap to the right or left,

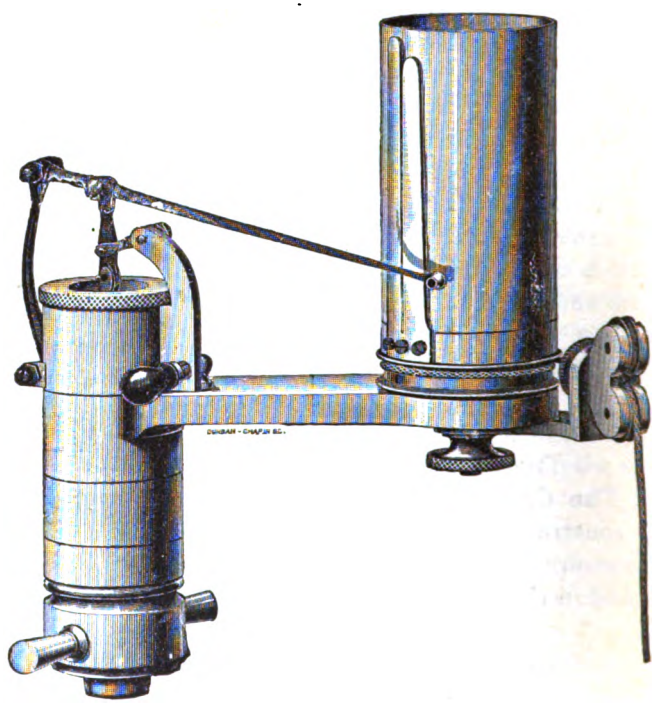

FIG. 233.—THE CROSBY INDICATOR.

and the piston-rod will be screwed off or on the swivel *E*, and the position of the atmospheric line will be raised or lowered.

Never remove the pins or screws from the joints *K*, *I*, *L*, *M*, but keep them well oiled with refined porpoise-jaw oil, which is furnished with each instrument.

The *tension on the drum-spring* should be increased or diminished according to the speed at which the instrument is used, by means of the thumb-nut on top of the drum-spindle.

Use a spring of such a number that the diagram will not be

over one and three-quarter inches high; as, for instance, a No. 40 spring should not be used for pressures above 70 lbs.

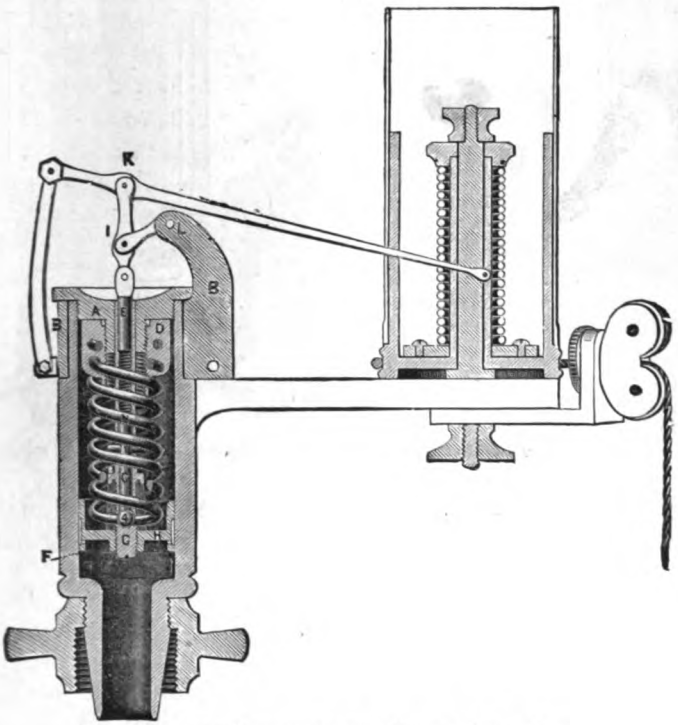

FIG. 234.—SECTION OF THE CROSBY INDICATOR.

385. Indicators with External Springs.—The Bachelder indicator, shown in Fig. 235, has a flat spring that is flexed over a movable fulcrum by the steam pressure acting on the piston. The scale of the spring is changed, through a limited range, by moving the fulcrum. This form is desirable when the spring is subjected to high temperatures; it is only open to the objection that the scale may be somewhat unreliable due to an accidental motion of the fulcrum.

An indicator with the spring entirely outside and above the indicator cylinder is shown in Fig. 236. For indicating gas-

engines when the spring is exposed to a high temperature this form is desirable. That shown is a form of the Tabor.

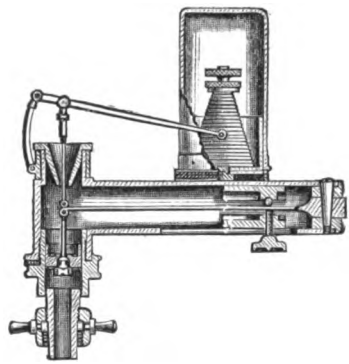

FIG. 235.—THE BACHELDER INDICATOR.

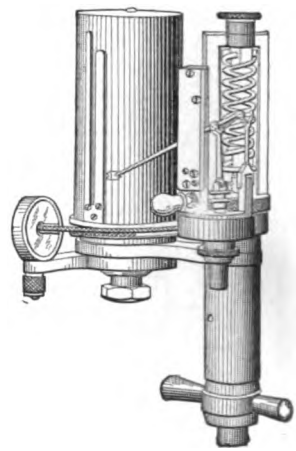

FIG. 236.—INDICATOR WITH EXTERNAL SPRING.

386. Sundry Types of Indicators.—Many of the makers of indicators provide reducing-wheels which may be adapted to

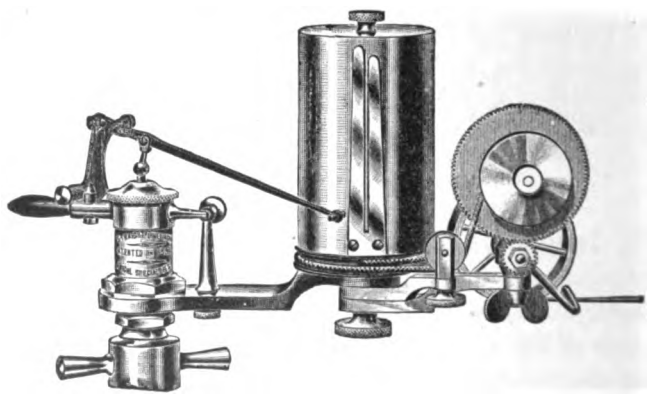

FIG. 237.—INDICATOR WITH REDUCING-WHEEL.

varying lengths of strokes either by changing gear-wheels in the train of gears, or by varying the diameter of the wheels driven by the cord from the cross-head. An indicator provided with one form of reducing-wheels is shown in Fig. 237.

In Figs. 238 and 238*a* are shown indicators with pencil-moving mechanism of different character from those described. In one

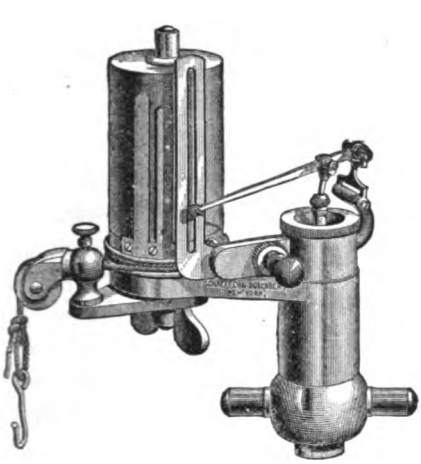

FIG. 238.—THE STRAIGHT-LINE INDICATOR.

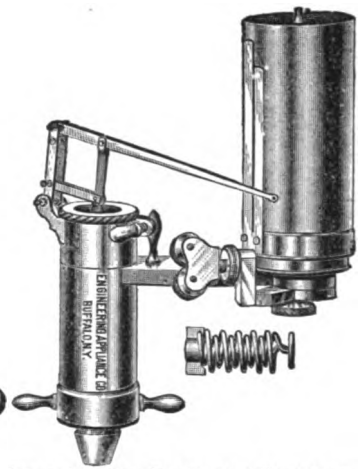

FIG. 238*a*.—THE PERFECTION INDICATOR.

case the pencil is directed in a straight line by a slotted guide-bar, in the other case it is made to move in a right line by a species of parallel motion links.

387. Optical Indicators.—The ordinary steam-engine indicator is not adapted for a very high speed of rotation, because the inertia of the moving parts distorts the diagram. By arranging a mirror, which may be illuminated so as to be deflected in one direction by changes of pressure in the cylinder, and in a direction at right angles by the motion of the piston, the indicator diagram will be traced by a beam of light thrown on a ground-glass screen or on a sensitive plate in a camera. The form of the diagram may be studied by observing it on the ground plate, or it may be photographed and preserved.

One form of this instrument is made by J. Carpentier of Paris, and is called the *Manographie.* Another form is made by the Elsässische Elektricitäts-Werke, Strassburg, and is called the optical indicator.

A perspective view and section of the Manographie is shown in Figs. 239 and 239*a*. A small mirror is located at *A* in the

back part of the camera *E*. It is deflected in one direction by a small crank operated in unison with the engine piston by the revolving shaft *P*, to which it is connected by the flexible shaft *R*, Fig. 239; it is deflected in a direction at right angles against the resistance of a spring by the pressure from the engine cylinder acting through a pipe *T* upon a diaphragm directly back of the mirror.

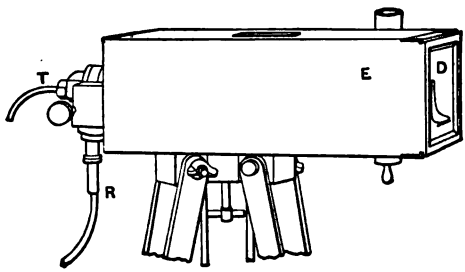

FIG. 239.

The mirror is illuminated by light from a lamp at *G* which is reflected by the prism shown at *H*. The indicator diagram is traced on the screen *D* by the ray of light, and may be photographed by the use of a sensitive plate. This apparatus has been successfully used to take indicator diagrams of gas-engines when moving at the rate of 2000 revolutions per minute.

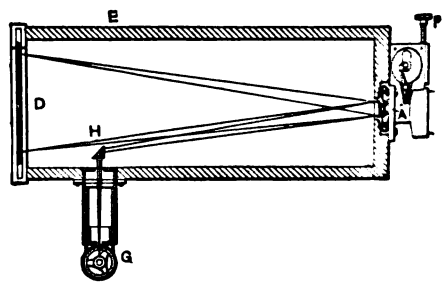

FIG. 239a.

388. Parts of the Steam-engine Indicator.—The parts of the steam-engine indicator are essentially as follows:

1. *The Steam-cylinder.*—This contains the piston, the indicator-spring, and attachments for the pencil mechanism.

2. *The Piston.*—This is usually solid, with grooves or holes in its outer edge; it must move easily in the cylinder. When in use it must be lubricated with cylinder-oil of best quality.

3. *The Pencil Mechanism.*—This receives the motion from the piston-rod, increases its amplitude, and transfers it to a pencil by means of guides or parallel-motion links, so that the

pencil moves in a right line and usually four to six times the distance of the piston. The height of the atmospheric line, or line of no pressure, on the drum, can often be adjusted by means of a threaded sleeve fitting on the piston-rod. In the arc indicator the pencil swings in an arc of a circle.

4. *The Indicator-spring.*—This is usually a helical spring; when in use it has one end screwed to the upper head of the cylinder, and the other screwed to the piston. To insure accurate results the spring must be accurate, and there must be no play or lost motion between the piston and the cylinder-head, and the spring must receive and deliver the force axially. The number of pounds pressure on the square inch required to move the pencil one inch is stamped on the spring, and the springs are designated by that number. It is essential to know the error, if any, in this number. A spring can be readily removed and another substituted when desired; the maximum compression probably should not exceed one third of an inch.

The spring is in many respects the most important part of the indicator, as the form of the diagram is directly affected by any error. The following cuts show some of the principal

FIG. 240.—CROSBY SPRING.

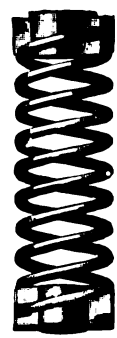

FIG. 241.—TABOR SPRING.

forms adopted by a few of the makers, and it may perhaps be sufficient to state that within the range of action of the indicator any of these forms can be made practically perfect.

DIMENSIONS OF PRINCIPAL INDICATORS.

Name of Indicator....	CROSBY.	TABOR, O. S.	TABOR, N. S.	THOMPSON, N. S.	ARC.	MCINNES.	BACHELDER.	RICHARDS.	CALKINS.
Maker.....	Crosby St'm Gauge Co.	Ashcroft Steam Gauge Co.		Am. Steam Gauge Co.	*	‡	Thompson & Bushnell.	Am. Steam Gauge Co.	§
Address.....	Boston.	New York.		Boston.	Boston.	.....	New York.	Boston.	New York.
Price.....	$100.00	$100.00	$100.00	$100.00	$25.00	.....	$75.00	$85.00	$35.00
Weight, pounds.....	1.65	2.63	2.25	2.92	†1.55	2.05	2.49	3.51	4.16
Diam. piston, inches..	0.796	0.796	0.797	0.798	0.562	0.796	0.80	0.796	0.796
Area piston, sq. inches	0.4976	0.4976	0.4989	0.5001	0.248	0.4989	0.5026	0.4976	0.4976
Diam. of drum, inches	1.5	2.625	2.312	2	1.5	1.825	1.75	2.00	2.03
Weight of drum, lbs...	0.28	0.40	0.38	0.60	0.32	0.38	0.43	0.94	0.26
Form of drum-spring..	Spiral.	Flat helix.	Flat helix.	Flat helix.	Spiral.	Spiral.	Spiral.	Flat helix.	Flat helix.
Ratio of pencil to piston-movement.....	6	5	4	4	5	6	6	4	5
Weight of pencil-movement	0.43	0.34		0.69					

* Arc Indicator made by Mechanical Specialties Co. † Weight with cock. ‡ Made in Glasgow, Scotland.
§ Engineers Instrument Co., Broadway, N. Y.

The Bachelder indicator (see Fig. 238) is made with a flat spring, and to a certain extent the tension is regulated by changing its fulcrum.

5. *The Paper-drum*, to which the card is attached, consists of a brass cylinder attached to a spindle which is connected to the drum-spring, the action of which has been described. The drum can be removed readily, and the tension on the spring changed at pleasure. Two clips or fingers serve to hold the paper in position.

6. *The Cord used*, although not a part of the indicator, must be selected with great care; it must be of a character not to be stretched by the forces acting on the indicator. Steel wire is sometimes used for this purpose. Any variation in length of the connecting cord affects the abscissa in the diagram.

7. *The Reducing-motions*, also not a part of the indicator, must give an exact reproduction, on a smaller scale, of the motion of the piston; otherwise the length of the indicator-diagram will either not be accurately reduced, or the events will not be properly timed.

389. The table opposite gives the actual dimensions of the principal indicators described, as obtained by careful measurement of those owned by Sibley College.

390. **Reducing-motions for Indicators.**—The maximum motion of the indicator-drum is usually less than four inches; consequently it can seldom be connected directly to the cross-head of the engine, but must be connected to some apparatus which has a motion less in amplitude but corresponding exactly in all its phases to that of the cross-head. This apparatus is termed a *reducing-motion*. Since the horizontal components of the indicator-diagram and consequently its area and form depend upon the motion of the piston, it is evident that the accuracy of the diagram depends upon the accuracy of the reducing-motion. Various combinations of levers and pulleys have been used* for reducing-motions, a few of which will be

* See Thurston's Engine and Boiler Trials.

described. Several simple forms of reducing-motion are given here as suggestions, but it is expected that the student will devise other motions if required, and ascertain the amount of error, if any, in the motion used.

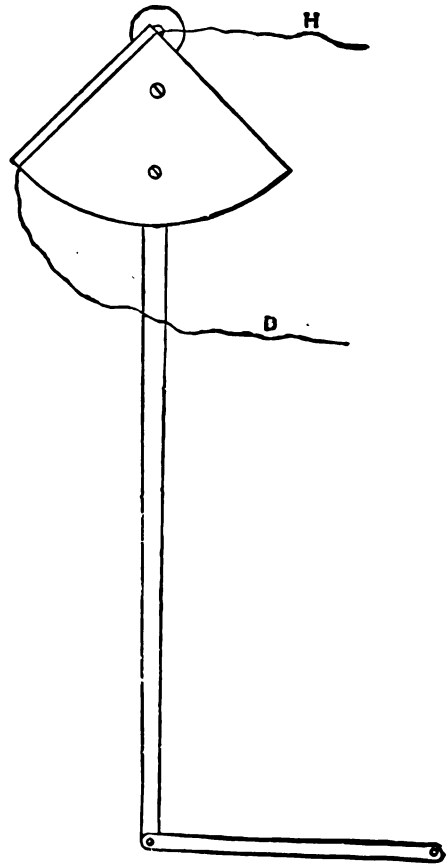

FIG. 242.—THE SIMPLE PENDULUM REDUCING-MOTION

The cheaper and more easily arranged reducing-motions consist usually of some form of swinging lever or pendulum (see Fig. 242) pivoted at one point, and connected at its lower end to the cross-head by a lever. The indicator-cord is attached to the swinging lever at some point having the proper motion. These motions never give an exact reproduc-

tion of the motion of the piston; but if the pendulum and cross-head are simultaneously at the centre of the stroke, the error is very small.

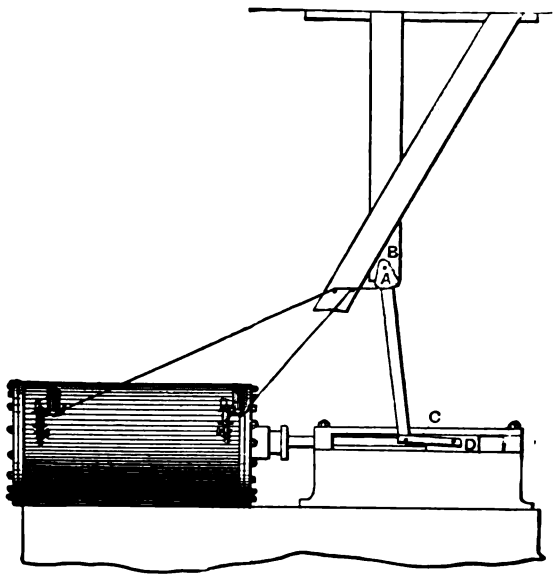

FIG. 243.—THE BRUMBO PULLEY.

A form of the pendulum-motion, called the *Brumbo pulley*, is frequently used as shown in Fig. 243. The pendulum is sometimes modified, so that its lower end is pivoted directly to a

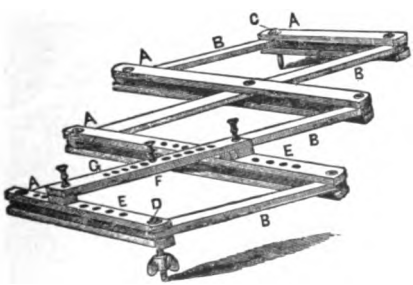

FIG. 244.—THE PANTOGRAPH.

point in the cross-head, its upper half moving vertically in a swinging tube. The cord is attached to an arc on this tube as in Fig. 242.

The *pantograph*, or lazy-tongs, as shown in Fig. 244 with plan of method of attachment shown in Fig. 245, is a perfect reducing motion, but because of its numerous joints it is not adapted to high-speed engines.

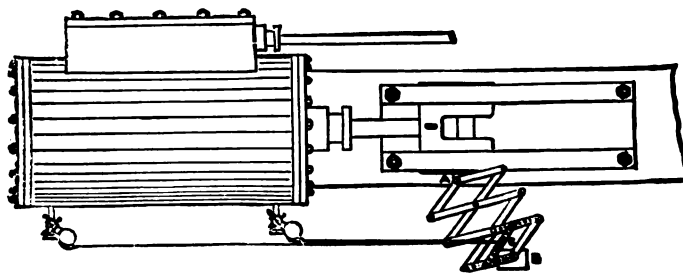

FIG. 245.—METHOD OF ATTACHING THE PANTOGRAPH.

A form of pantograph with four joints only, shown in Fig. 246, is much better adapted to high-speed engines than the one with more numerous joints shown above.

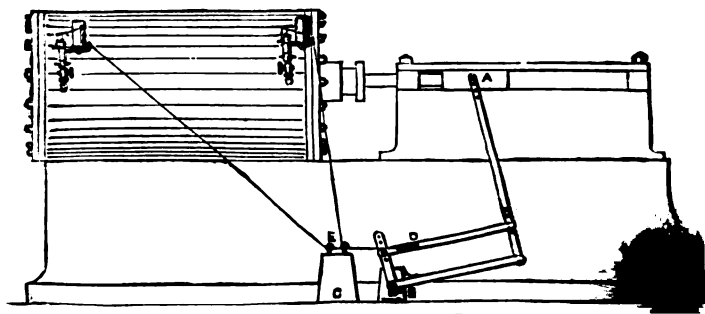

FIG. 246.—METHOD OF USING THE PANTOGRAPH.

Reducing-wheels.—Reducing wheels, which consist of a large and a small pulley (see Fig. 247) attached to the same axis, are extensively used by engineers. The method of attaching this reducing-motion to an engine is shown in Fig. 248.

391. The Indicator-cord.—The indicator-cord should be as nearly as possible inextensible, since any stretch of the cord causes a corresponding error in the motion of the indicator drum. As it is nearly impossible to secure a cord that will not

stretch, it should be made as short as possible, and a fine wire of steel or iron or of hard-drawn brass should be used if practicable.

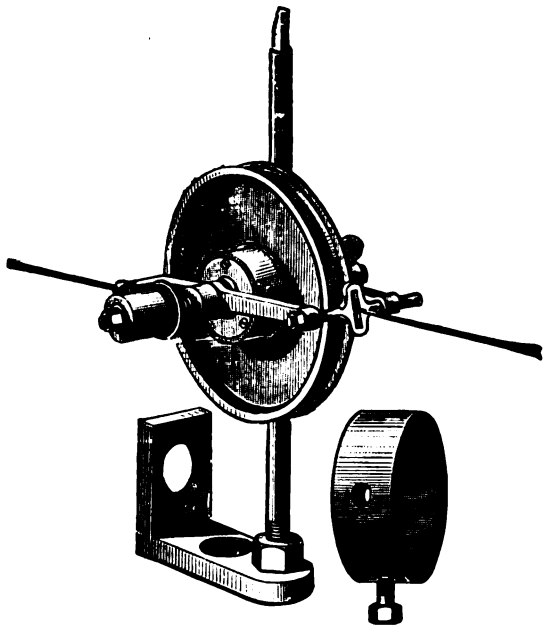

FIG. 247.—SCHAEFFER AND BUDENBERG REDUCING-MOTION.

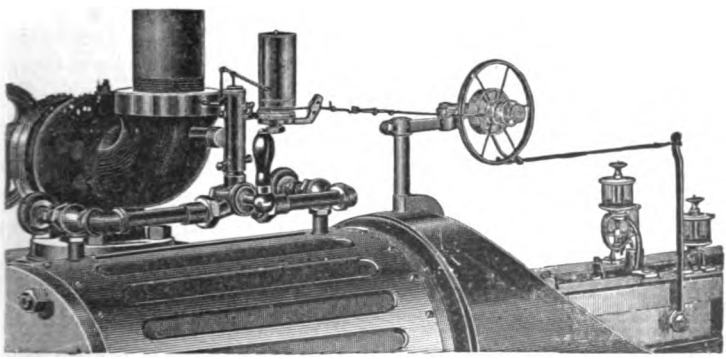

FIG. 248.—WEBSTER AND PERKS REDUCING-MOTION.

The indicator-cord supplied by makers of indicators is a braided hard cotton cord, stretching but little under the required stress,

If a "rig" is to be permanently erected, it is recommended that the motion be taken from a sliding bar attached to the cross-head and extending to or beyond the indicators. The *angle of the cord* with the path of motion of the cross-head should be as nearly constant as possible, since any variation in this angle will cause a distortion in the motion of the drum.

In Figs. 243, 246, and 248 will be seen devices to overcome the effect of angularity of the indicator-cord.

The indicator-cord is usually hooked and unhooked into a loop in a cord fastened to the reducing-motion. A very convenient form for such a loop, and one that can readily be adjusted, is shown in Fig. 249. The indicator-cord is usually

FIG. 249.—THE LOOP.

provided with a hook fastened as shown in Fig. 182, which is hooked when diagrams are needed into the loop attached to the reducing-motion.

The author would strongly urge that the indicator-cord be arranged so as to avoid the necessity of frequent hooking and unhooking, thus throwing severe and unnecessary strains on the indicator-drum and cord: this can be done by connecting a point on the cord near the indicator with a spiral spring fastened to a fixed point in the line of the cord produced. This spring should be strong enough to keep the slack out of the cord. When it is desired to stop the motion, the drum-cord is pulled toward the reducing-motion to the extent of its travel, and held or tied until another diagram is needed. Some of the indicator-drums are provided with ratchets or detents that serve the same purpose. When several indicators are in use and simultaneous diagrams are required, a detent-motion worked by an electric current will prove very satisfactory. In case of *compound engines* when numerous indicators are required these suggestions become of even greater importance.

392. Standardization of the Indicator.—The accuracy of

the indicator-diagram depends upon the following features, all of which should be the subject of careful examination:

(1) Uniformity of the indicator-spring.

(2) Accuracy of the drum-motion.

(3) Parallelism of the piston-movement to the cylinder.

(4) Parallelism of the pencil-movement to the axis of the drum.

(5) Friction of the piston and pencil-movements.

(6) Lost motion.

The calibration of these parts should be made as nearly as possible under the conditions of actual use and as described in the following articles.

393. **Calibration of the Indicator-spring.**—The accuracy of the indicator-spring is only to be determined by comparison with standardized apparatus. This may be done as follows:

Firstly: *with the open mercury column.* This can be done with steam only, as the leakage of water past the loosely-fitting piston would render it impossible to maintain the pressure. Insert the spring; *see that the indicator is oiled* and in good condition. Attach the indicator as previously explained for the calibration of steam-gauges, page 366; put paper on the drum; turn on steam-pressure until the instrument is warm; turn off the steam, and pressing the pencil lightly against the paper, turn the drum by hand, thus drawing the atmospheric line. Apply pressure by increments equal to one fifth that marked on the spring, keeping the motion continually upward, stopping only long enough to draw the line for the required pressure. Take ten increments first up then down; the average position of any line will give the ordinate corresponding to that pressure; the difference between any two lines (see Fig. 250) will be twice the friction of indicator-piston at *that point.*

Second: *with the standard scales.* This method was devised by Professor M. E. Cooley, of Ann Arbor. In this case the indicator is supported on a bracket above the platform of the scales. Force is applied to the indicator-piston by means of a rod which can be raised or lowered by turning a hand-wheel; this rod terminates above in a cap nicely fitted to the under

side of the piston, and below it rests on a pedestal standing on the platform of the scales. Any force applied to compress the spring is registered on the scale beam. The reading of the scale-beam is that force acting on one-half square inch, as the piston is usually one-half square inch in area; this is to be multiplied by 2 to correspond with the reading given by the indicator-spring. The indicator can be heated by wrapping rubber tubing around the cylinder and passing steam through the tube.

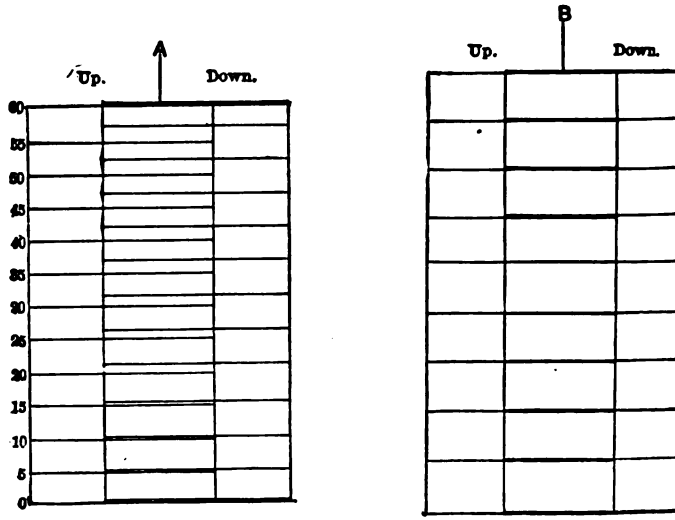

FIG. 250.—INDICATOR-SPRING CALIBRATION.

FORM FOR CALIBRATION OF INDICATOR SPRING.

By comparison with.....
Make of indicator.....
Mark and No. of spring.....

Date..... Observers: {.....
.....

No.	Gauge.		Actual Pressure.	Ordinates.				Actual Pressure.	Error. Per cent.
	Inches	Lbs.		Inches.			Pounds.		
				Up.	Down.	Mean.			

The indicator-springs should be calibrated as nearly as possible under the conditions of actual use. The springs are elongated by increase in temperature and weakened because of that fact, so that the calibration of the spring cold will give results which differ by approximately 3 per cent. from the calibration when the spring is at a temperature approximating 212°, as has been proved by extended experiments.*

Various forms of apparatus have been devised for the testing of indicator-springs both cold and hot. A simple device is shown

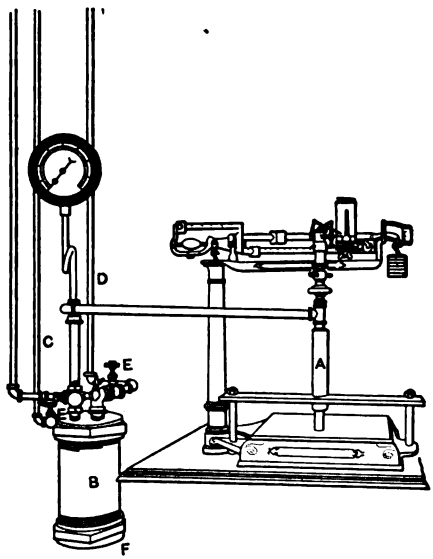

FIG. 251.—INDICATOR-SPRING TESTING DEVICE.

in Fig. 251 consisting of a cylinder, *A*, supported on a bracket above a pair of scales and fitted with a piston having an area of cross-section exactly the same as the indicator-piston. A rod from this piston extends downward on to a platform scale, as shown in the figure. The indicator is connected by suitable

* Experiments, Marks and Barraclough, Vol. XV, Transactions A. S. M. E.

piping to the upper end of the cylinder. The steam for the purpose of calibration is adjusted in pressure by a valve, *E*, before it enters the drum, *B*. The pressure in the steam in the drum is shown on the attached gauge. This steam-pressure exerts an upward pressure on the indicator-piston and a downward pressure on the piston in the cylinder, *A*, which latter, corrected for dead weight, is measured on the weighing-scales shown.

A modification of this apparatus is shown in Fig. 252, which consists of a vessel, *A*, into which steam can be admitted

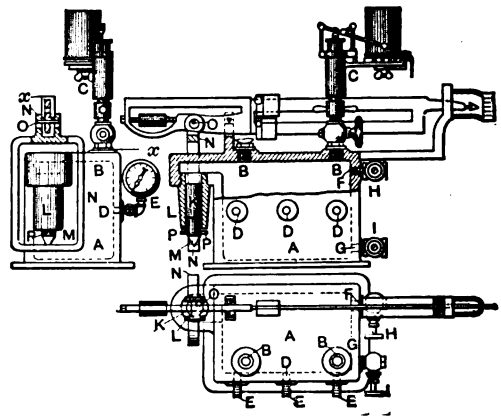

FIG. 252.—INDICATOR-SPRING TESTING APPARATUS.

at any desired pressure. The pressure in the vessel acts on the piston, *K*, which is ½ square inch in area and may be measured by the attached scale-beam. The same pressure reacts on the indicator-piston. By taking simultaneous readings of the pressure on the piston, *K*, and on the indicator-piston, the calibration may be performed substantially as described.

This apparatus has proved satisfactory after an extensive use. It can be purchased of Schaeffer & Budenberg of Brooklyn, N. Y.

394. Test for Parallelism of the Pencil-movement to the Axis of the Drum.—This is tested by removing the spring from the indicator, rotating the drum, and drawing an atmospheric line; then hold the drum stationary in various positions and press the piston of the indicator upward throughout its full stroke, while the pencil is in contact with the paper. The lines thus drawn should be parallel to each other and perpendicular to the atmospheric line.

Parallelism of the piston-movement to the cylinder axis is shown when the increments for equal pressure are the same in all positions of the diagram. It is important that the piston is not cramped or pushed over by the spring, in any part of its stroke.

Friction of the piston and pencil-movement can be determined in the calibration of the indicator-spring as explained. When the spring is removed from the indicator, the parts should work easily and freely but without lost motion.

395. Accuracy of the Drum-motion.—The accuracy of the drum-motion depends on the form of the drum-spring, the mass moved, the length of the diagram, and the elasticity of the connecting cord.

Indicator-drums would revolve in a harmonic motion if the inertia of the mass could be neglected. The speed of rotation is greatest near the half-stroke of the piston; therefore, if the drum-spring tension can be adjusted so as to exactly counterbalance the effect of the inertia of the moving parts, the theoretical harmonic motion will be nearly realized.

In most indicator drum-springs the tension increases directly in proportion to the extension. Since the speed of the drum is greatest at half stroke, at this point the drum will run ahead of its theoretic motion if the spring tension is not sufficient to counteract the effect of the inertia of the moving parts. Therefore if the tension of the drum-spring is adjusted to exactly balance the effect of inertia at half-stroke, the card should be as nearly as possible theoretically correct. To obtain the value of this tension, use is made of the formulæ for the harmonic motion of a body as follows. Let

t = time of $\frac{1}{2}$ length of card = $\frac{1}{4}$ of a revolution ;

s = $\frac{1}{2}$ length of card ;

$t = \frac{\pi}{2\sqrt{a}}$; (see Church's Mechanics.)

$P = pM = T$, where T is the tension in the spring at $\frac{1}{2}$ the length of the card.

$$p = -sa; \qquad a = -\frac{p}{s};$$

$$M = \frac{W}{g} = \text{mass of rotating parts}; \qquad a = -\frac{T}{Ms}.$$

$$\therefore t = -\frac{\pi}{2\sqrt{\frac{T}{Ms}}}; \qquad t^2 = \frac{\pi^2}{4\left(\frac{T}{Ms}\right)}; \qquad T = \frac{\pi^2 Ms}{4t^2}.$$

The foot, pound, second system is used in the formulæ. The results are shown in the following table.

TABLE FOR TENSION ON INDICATOR DRUM OF 1.0 LB. WEIGHT.

Revolutions per Minute.	Pounds of Force to pull Drum 1.75 in.	Revolutions per Minute.	Pounds of Force to pull Drum 1.75 in.
50	0 10	225	2.5
75	0.25	250	3.15
100	0.50	275	3.8
125	0.8	300	4.55
150	1.15	350	6.15
175	1.55	375	7.0
200	2.0	400	8.0

The total error introduced by inertia can be determined as follows: Attaching the indicator to an engine, permit it to run sufficiently long to harden the cord and the knots, then stop the engine, turn it over by hand and find the length of the diagram with the speed so small as to eliminate the inertia: leaving the cords connected, run the engine at full speed: any

inertia effect will be shown by an increase in the length of the diagram. This increase in length may be partly due to stretch in the indicator-cord caused by inertia of the rotating parts, as even with the best tension on the springs, determined as explained, it may be sensibly lessened by the use of wire. A simple arrangement, consisting of a pin and connecting-rod leading to the face-plate of a lathe, the tool-rest being utilized as a guide, may be used instead of an engine for obtaining complete determination of this error. The amount of error caused by over-travel of the drum has been found by experiment to be from 0.5 to 1.5 per cent at 250 revolutions, with the best tension on the drum spring.

Uniform Tension on the Indicator-cord.—It is often important to determine whether the drum-spring maintains a uniform tension on the cord, or whether it alternately exerts a greater

FIG. 253.—BROWN DRUM-SPRING TESTING-DEVICE.

or less stress; this may be determined by the instrument shown in Fig. 253. The testing instrument consists of a wooden plate, *A*, on one end of which is fastened the brass frame, *BB*, carrying the slide, *C*, with its cross-head, *D*. The head of the spring, *R*, is screwed to the cross-head, while the other end is connected with the bent lever, *G*, carrying the pencil The connecting-rod, *E*, which moves the slide, *C*, receives its motion from a crank not shown in the figure. The swinging leaf *F* holds the paper on which the diagram is to be taken. The indicator to be tested is clamped to the plate as shown, and the drum-cord connected with the free end of the spring. The crank is made to move at the speed at which it is desired to test the drum-spring. The paper is then pressed up to the pencil and the diagram taken. If the tension

on the cord is constant, the lines which represent the forward and return strokes will be parallel to the motion of the slide; but, if the stress is not constant, the pencil will rise and fall as the stress is greater or less. The line drawn when the cord has been detached from the indicator (Fig. 254) is the line of no stress. In the diagram, horizontal distance represents the position of the drum, and vertical distance represents strain on the cord. The perfect diagram would be two lines near together and parallel to the line of no stress, and would represent a constant stress, and consequently a constant stretch of the cord, from which no error would result.

When the length of the cord and the amount it will stretch under varying stresses is known, the errors in the diagram due to stretch of cord caused by irregular stresses applied by the drum-spring can be calculated.

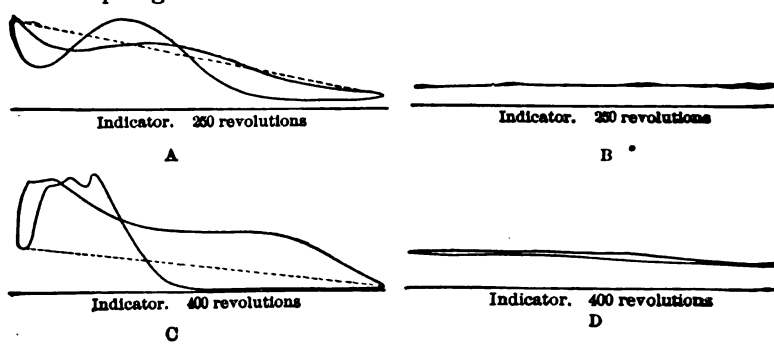

FIG. 254.—DIAGRAMS SHOWING VARIATION IN DRUM-SPRING STRESS.

396. To Adjust and Calibrate a Drum-spring.

1. Find the weight of the moving parts, and compute the theoretic stress on the indicator-cord. (See Article 395.)

2. Attach to the face-plate of a lathe in such a manner that the speed can be varied within wide limits.

3. Draw diagrams at various rates of speed, various lengths of stroke, and various tensions on the drum-spring.

4. Find the error in the diagram for each condition. Plot the results, and deduce from the curve shown the best length of diagram and best tension for each speed.

5. Repeat the same operations with the Brown spring testing-device, and compare the results.

397. Method of Attaching the Indicator to the Cylinder. —Holes for the indicator are drilled in the clearance-spaces at the ends of the cylinders, in such a position that they are not even partially choked by any motion of the piston. These holes are fitted for connection to half-inch pipe: they are located preferably in horizontal cylinders at the top of the cylinder; but if the clearance-spaces are not sufficiently great they may be drilled in the heads of the cylinder, and connections to the indicators made by elbows. The holes for the indicator-cocks are usually put in the cylinders by the makers of the engine, but in case they have to be drilled great care must be exercised that no drill-chips get into the cylinder. This may be entirely prevented by blocking the piston and admitting twenty or thirty pounds of steam-pressure to the cylinder.

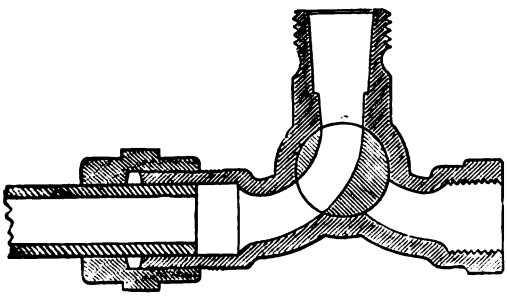

FIG. 255.—SECTION OF CROSBY THREE-WAY COCK.

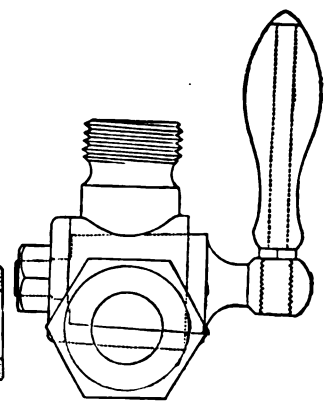

FIG. 256.—ELEVATION OF CROSBY THREE-WAY COCK.

The connections for the indicator are to be made as short and direct as possible. Usually the indicator-cock can be screwed directly into the holes in the cylinder, and an indicator attached at each end. In case a single indicator is used to take diagrams from both ends of the cylinder, half-inch piping with as easy bends as possible is carried to a three-way cock, as in Fig.

194, to which the indicator is attached. The cock is located as nearly as possible equidistant from the two ends of the cylinder.

The form of the three-way cock is shown in Figs. 199 and 200, and the method of connecting in Fig. 194.

In connecting an indicator-cock, use a wrench very carefully; but on no account use lead in the connections, as it is likely to get in the indicator and prevent the free motion of the piston.

398. Directions for Taking Indicator-diagrams.

Firstly, provide a perfect reducing-motion, and make arrangements so that the indicator-drum can be stopped or started at full speed of the engine. (See Article 391.)

Secondly, clean and oil the indicator, and attach it to the engine as previously explained. Insert proper spring; oil piston with cylinder-oil.

Thirdly, put proper tension on the drum-spring (see Article 395); see that the pencil-point is sharp and will draw a fine line.

Fourthly, connect the indicator-cord to the reducing-motion: turn the engine over and adjust the cord so that the indicator-drum has the proper movement and does not hit the stops.

Fifthly, put the paper on the drum; turn on steam, allow it to blow through the relief-hole in the side of the cock; then admit steam to the indicator-cylinder, close the indicator-cock, start the drum in motion, and draw the atmospheric line with engine and drum in motion; open the cock, press the pencil lightly and take the diagram; close the cock and draw a second atmospheric line. Do not try to obtain a heavy diagram, as all pressure on the card increases the indicator friction and causes more or less error. Take as *light a card* as can be seen; brass point and metallic paper are to be used when especially fine diagrams are required.

When the load is varying, and the *average* horse-power is required, it is better to allow the pencil to remain during a number of revolutions, and to take the mean effective pressure from the several diagrams drawn.

Remove card after diagram has been taken, and on the back of card make note of the following particulars, as far as conveniently obtainable:

No..... Time.....	Date.....
Diagram from M.....	Engine.....
Diameter of cylinder.....	Built by..... .....
Length of stroke.....	.....Pressure .....
Revolutions per minute.....	Barometer reads ....
Pressure of steam, in lbs., in boiler...	.....Throttle.....
Position of throttle-valve.....	.....Regulator .....
Vacuum per gauge, in inches.....	Remarks.....
Temperature of hot-well.....	....
Scale of spring.....	... .
Inside diameter of feed-pipe.....	.....
" " " exhaust-pipe	.....
.....Valves.....	.....

Sixthly, *after a sufficient number of diagrams has been taken,* remove the piston, spring, etc., from the indicator while it is still upon the cylinder; allow the steam to blow for a moment through the indicator-cylinder, and then turn attention to the piston, spring, and all movable parts, which must be thoroughly wiped, oiled, and cleaned. *Particular attention* should be paid to the springs, as their accuracy will be impaired if they are allowed to rust; and great care should be exercised that no gritty substance be introduced to cut the cylinder or scratch the piston. Be careful never to bend the steel bars or rods.

399. Care of the Indicator.—The steam-engine indicator is a delicate instrument, and its accuracy is liable to be impaired by rough usage. It must be handled with care, kept clean and bright; its journals must be kept oiled with suitable oil. It must be kept in adjustment. In general, all screws can be turned by hand sufficiently tight, and no wrench should be used to connect or disconnect it. Never use lead on the connections. Before using it, take it apart, clean and oil it. Try each part separately. See if it works smoothly; if so, put it together without the spring. Lift the pencil-lever, and let it

fall; if perfectly free, insert the spring as explained, and see that there is no lost motion; oil the piston with cylinder-oil, and all the bearings with nut- or best sperm-oil. Give it steam, but do not attempt to take a card until it blows dry steam through the relief. If the oil from the engine gums the indicator, always take it off and clean it. After using it remove the spring, dry it and all parts of the indicator, then wipe off with oily waste. Fasten the indicator in its box, in which it will go, as a rule only one way, but it requires no pounding to get it properly in place; carefully close the box to protect it from dust.

CHAPTER XVII.

THE INDICATOR-DIAGRAM.

400. Definitions.—The indicator-diagram is the diagram taken by the indicator, as explained in Article 378, page 515.

In the diagram the ordinates correspond to the pressures per square inch acting on the piston, the abscissæ to the travel

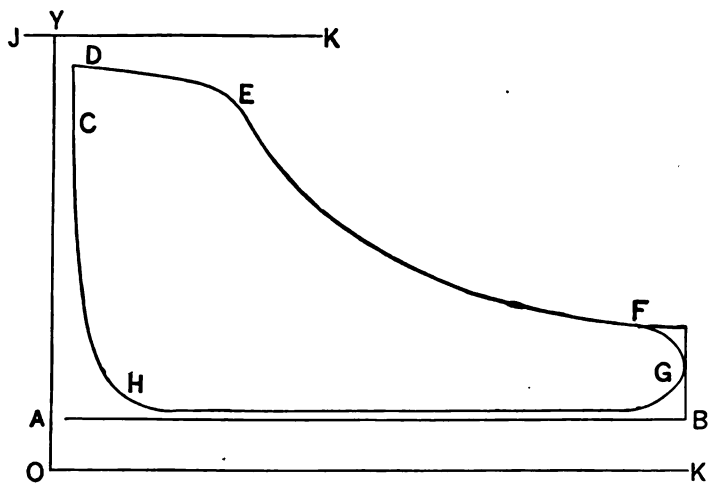

FIG. 257.—DIAGRAM FROM AN IMPROVED GREENE ENGINE. CYLINDER, 16 INCHES IN DIAMETER 36 INCHES STROKE. BOILER-PRESSURE, 100 LBS. 80 REVOLUTIONS PER MINUTE. SCALE, 50.

of the piston. During a complete revolution of an engine occur *four phases of valve-motion* which are shown on the indicator-diagram, viz.: *admission*, *CDE*, when the valve is open and the steam is passing into the cylinder; *expansion*, *EF*, when steam is neither admitted nor released and acts by its

expansive force to move the piston; *exhaust*, *FGH*, when the admission-port is closed and the exhaust opened so that steam is escaping from the cylinder; and *compression*, *HC*, when all the ports are closed and the steam remaining in the cylinder acts to bring the piston to rest.

The Atmospheric Line, *AB*, is a line drawn by the pencil of the indicator when the connections with the engine are closed and both sides of the piston are open to the atmosphere. This line represents on the diagram the pressure of the atmosphere, or zero gauge-pressure.

The Vacuum Line, *OK*, is a reference-line drawn a distance corresponding to the barometer-pressure (usually about 14.7 pounds) by scale below the atmospheric line. It represents a perfect vacuum, or absence of all pressure.

The Clearance Line, *OY*, is a reference-line drawn at a distance from the end of the diagram equal to the same per cent of its length as the clearance or volume not swept through by the piston is of the piston-displacement. The distance between the clearance line and the end of the diagram represents the volume of the clearance of the ports and passages at the end of the cylinder.

The Line of Boiler-pressure, *JK*, is drawn parallel to the atmospheric line, and at a distance from it by scale equal to the boiler-pressure shown by the gauge. The difference in pounds between it and *DE* shows the loss of pressure due to the steam-pipe and the ports and passages in the engine.

The Admission Line, *CD*, shows the rise of pressure due to the admission of steam to the cylinder by opening the steam-valve. If the steam is admitted quickly when the engine is about on the dead-centre, this line will be nearly vertical.

The Point of Admission, *C*, indicates the pressure when the admission of steam begins at the opening of the valve.

The Steam Line, *DE*, is drawn when the steam-valve is open and steam is being admitted to the cylinder.

The Point of Cut-off, *E*, is the point where the admission of steam is stopped by the closing of the valve. It is difficult to determine the exact point at which the cut-off takes place.

It is usually located where the outline of the diagram changes its curvature from convex to concave. It is most accurately determined by extending the expansion line and steam line so that they meet at a point.

The Expansion Curve, EF, shows the fall in pressure as the steam in the cylinder expands doing work.

The Point of Release, F, shows when the exhaust-valve opens.

The Exhaust Line, FG, represents the change in pressure that takes place when the exhaust-valve opens.

The Back pressure Line, GH, shows the pressure against which the piston acts during its return stroke. On diagrams taken from non-condensing engines it is either coincident with or above the atmospheric line, as in Fig. 201. On cards taken from condensing engines it is found below the atmospheric line, and at a distance greater or less according to the vacuum obtained in the cylinder.

The Point of Exhaust Closure, H, is the point where the exhaust-valve closes. It cannot be located very definitely, as the first slight change in pressure is due to the gradual closing of the valve.

The Point of Compression, H, is where the exhaust-valve closes and the compression begins.

The Compression Curve, HC, shows the rise in pressure due to the compression of the steam remaining in the cylinder after the exhaust-valve has closed.

The Initial Pressure is the pressure acting on the piston at the beginning of the stroke.

The Terminal Pressure is the pressure above the line of perfect vacuum that would exist at the end of the stroke if the steam had not been already released. It is found by continuing the expansion curve to the end of the diagram, as in Fig. 201. This pressure is always measured from the line of perfect vacuum, hence it is the *absolute* terminal pressure.

Admission Pressure is the pressure acting on the piston at end of compression, and is usually less than initial pressure.

Compression Pressure is the pressure acting on the piston at beginning of compression; this is also the least *back pressure.*

Cut-off Pressure is the pressure acting on the piston at beginning of expansion.

Release Pressure is the pressure acting on the piston at end of expansion.

Mean Forward Pressure is the average height of that part of the diagram traced on the forward stroke.

Mean Back Pressure is the average height of that part traced on the return stroke.

Mean Effective Pressure (M. E. P.) is the difference between mean forward and mean back pressure during a forward and return stroke. It is the length of the mean ordinate intercepted between the top and bottom lines of the diagram multiplied by the scale of the diagram. It is obtained without regard to atmospheric or vacuum lines.

Ratio of Expansion is the ratio of the volume of steam in the cylinder at end of the stroke, compared with that at cut-off. In computations for this quantity the volume of clearance must be taken into account. Ratio of expansion is denoted by r. For hyperbolic expansion, p being pressure in pounds per square foot at cut-off, and v the corresponding total volume, the work done per stroke and per square foot of area $= pv(1 + Hy \log r)$.

The volume may be expressed as proportional to linear feet, with an additional length equal to the per cent of clearance, since the area of the cylinder is constant. The product of pressure per square foot into total volume is a constant quantity for hyperbolic expansion. The ratio of expansion is the reciprocal of the cut-off measured from the clearance line. This cut-off is distinguished from that shown directly on the card by designating it as the absolute cut-off.

Initial Expansion is the fall of pressure during admission, due to an imperfect supply of steam.

Wire-drawing is the fall of pressure between the boiler and cylinder; it is usually indicated by initial expansion.

401. Measurement of Diagrams.—The diagrams taken are on a small scale, they are often irregular, and the boundary lines are frequently obscure, so that the measurement must be made with great care.

The diagrams may be taken from each end of the cylinder on a separate card, as shown in Fig. 257; or by the use of the three-way cock (see Article 398), in which case the two diagrams will be drawn on the same card as shown in Fig. 258. In the latter case each diagram is to be considered separately; that is, the area of each diagram, as *CDEBFC* and *GHIJKG*, is to

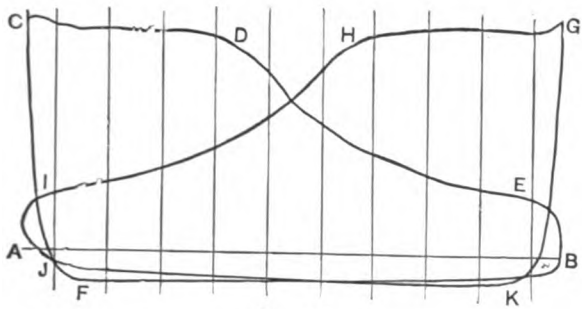

FIG. 258.

be determined as though on a separate card. The object of diagram-measurements is principally to obtain the mean effective pressure (M. E. P.).

Two methods are practised.

First, the *method of ordinates.* In this case the atmospheric line *AB* is divided into ten equal spaces, and ordinates are erected from the centre of each space. The sum of the length of these various ordinates divided by the number gives the mean ordinate. This multiplied by the scale of the diagram gives the mean effective pressure. The sum of the ordinates is expeditiously obtained by successively transferring the length of each ordinate to a strip of paper and measuring its length.

Secondly, *with the planimeter.* The planimeter gives the mean ordinate much more accurately and quickly than the

method of ordinates. The various planimeters are fully described, pages 32 to 55.

With any planimeter the area of the diagram can be obtained, in which case the mean ordinate is to be found by dividing by the length of the diagram. Several of the planimeters give the value of the mean ordinate, or M. E. P., directly.

In some instances the indicator-diagram has a loop, as in Fig. 259, caused by expanding below the back-pressure line; in this case the ordinates to the loop are negative and should be

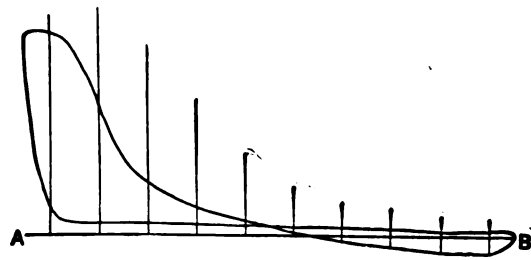

FIG. 259.

subtracted from the lengths of the ordinates above. In case of measurement by the planimeter, if the tracing-point be made to follow the expansion-line in the order it was drawn by the indicator-pencil, the part within the loop will be circumscribed by a reverse motion, and will be deducted automatically by the instrument, so that the reading of the planimeter will be the result sought.

402. Indicated Horse-power.—Indicated horse-power is the horse-power computed from the indicator-diagram, being obtained by the product of M. E. P. (p), length of stroke in feet (l), area of piston in square inches (a), and number of revolutions (n), as represented in the formula $plan \div 33{,}000$. In this computation the area on the crank side of the piston is to be corrected for area of piston-rod, and the two ends of the cylinders computed as separate engines. Further, in this computation, it will not in general answer to multiply the average M.E.P. of a number of cards by the length of stroke and by the

average of the number of revolutions, but each card must be subjected to a separate computation and the results averaged. This can be readily done for each engine by computing a table made up of the products of the average value of n by length of stroke and area of piston, and for different values of M. E. P. from 1 to 10. Take from this table the values corresponding to the given M. E. P., increase or diminish this as required by the per cent of change of speed from the average. A very convenient table for this purpose, entitled "Horse-power per Pound, Mean Pressure," is given in the Appendix to this work, arranged with reference to diameter of cylinder in inches and piston-speed in feet per minute.

403. Form of the Indicator-diagram.—The form of the indicator-diagram has been carefully worked out for the ideal case by Rankine and Cotterell.* In the ideal case the steam works in a non-conducting cylinder, and all loss of heat is due to transformation into work, the expansion in such a case being adiabatic. In the actual case the problem is much more complicated, since a large portion of the heat is utilized in heating the cylinder, and is returned to the steam at or near the time of exhaust, doing little work. It is found, however, in the best engines working with quick-acting valve-gear, that the steam and back-pressure lines are straight and parallel to the atmospheric line, and that the expansion and compression lines are very nearly hyperbolæ, asymptotic to the clearance line and to the vacuum line.

If we denote by p the pressure measured from the vacuum line, and by v the volume corresponding to a distance measured from the clearance line, so that pv shall be the co-ordinates of any point, we shall have as characteristic of the hyperbola

$$pv = \text{constant.}$$

This is the same as Mariotte's law for the expansion of non-condensible gases, since, according to that law, the pressure varies inversely as the volume.

* Steam-engine, by James H. Cotterell.

Rankine found by examination of a great many actual cases that the expression $pv^{1.4}$ = constant agrees very nearly with the ideal case of adiabatic expansion. The variation from the ideal expansion line in any given case may be considerable, and the hyperbola drawn from the same origin is considered as good a reference-line as any that can be used, and the student should become familiar with the best methods of constructing it.

404. Methods of Drawing an Hyperbola.—The methods of drawing an hyperbola, the clearance and vacuum lines being given, are as follows:

First Method. (See Fig. 260.)—*CB*, the clearance line, and *CD*, the vacuum line, being given, draw a line parallel to the

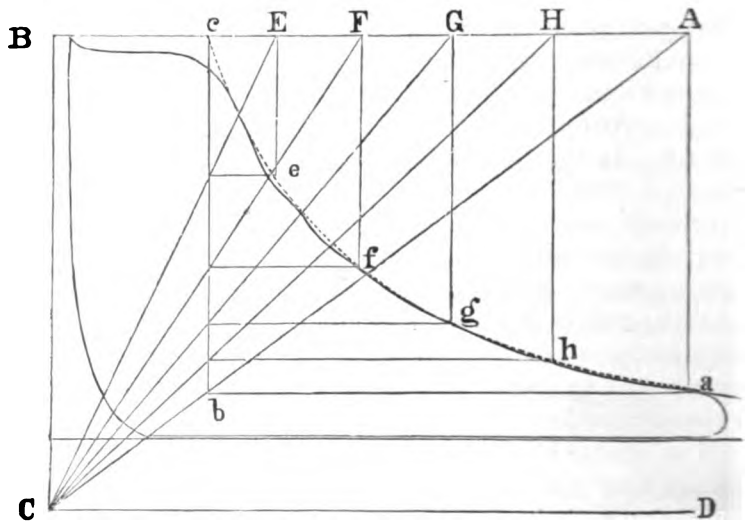

FIG. 260.—METHOD OF DRAWING AN HYPERBOLA.

atmospheric line through *B*; find by producing the steam and expansion lines the point of cut-off, *c*. Draw a series of radiating lines from the point *C* to the points *E*, *F*, *G*, *H*, and *A*, taken at random, and a line *cb* intersecting these lines drawn from *c* parallel to *BC*. From the points of the intersection of *cb* with these radiating lines draw horizontal lines to meet vertical lines drawn from the points *E*, *F*, *G*, *H*, and

A; the intersections of these lines at e, f, g, h, and a are points in the hyperbola passing through the point c. If it is desired to produce the hyperbola from a upward, the same method is used, but the line AB is drawn through the point a, and the vertical lines are extended above AB instead of below.

Second Method. (See Fig. 261.)—The hyperbola may be drawn by a method founded on the principle that the intercepts made by a straight line intersecting an hyperbola and its asymptotes are equal. Thus if *abcd* represent an hyperbola, EC and CD its asymptotes, then the intercepts aa' and bb' made by the straight line $a'b'$ are equal.

To draw the hyperbola: Beginning at any point, as a, draw

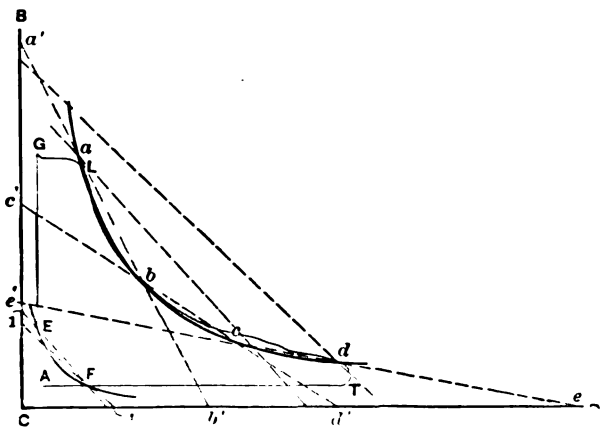

FIG. 261.—METHOD OF DRAWING AN HYPERBOLA.

the straight line $a'b'$, and lay off from the line CD $b'b$, equal to $a'a$; then will b be one point in the hyperbola. Draw a similar line $c'd'$ through b, making $d'c$ equal $c'b$; then will c be another point in the hyperbola. This process can be repeated until a suitable number of points is found; the hyperbola is to be drawn through these points. A similar method can be used to draw the hyperbola EF.

405. Construction of Saturation and Adiabatic Curves.—The saturation curve of steam is represented almost exactly by the equation $pv^{\frac{11}{12}} =$ a constant. This is the curve whose

volumes and pressures correspond to those given in the steam-tables; no doubt the easiest way to construct such a curve is to take the volumes from the steam-tables corresponding to given pressures and set them off along the volume axis; lay off the corresponding pressures as ordinates; then a curve drawn through the extremities of the ordinates will be the expansion curve, which, as the form of the equation shows, does not differ greatly from an hyperbola.

The *adiabatic curve*, or that corresponding to neither gain nor loss of heat, is expressed approximately by $pv^{\gamma} = \text{constant}$,* and differs somewhat more from the hyperbola than the saturation curve.

Any of the exponential curves which are represented by the equation $pv^n = p_1v_1^n = p_2v_2^n$ can be drawn as follows:

From the above expression

$$n \log v + \log p = n \log v_1 + \log p_1,$$

from which

$$\log p = n \log v_1 + \log p_1 - n \log v;$$

from which, if n, v_1, and v are known, p may be determined.

The values of n are as follows:

Equilateral hyperbola,	$n = 1$;
Saturation curve—steam,	$n = \frac{1}{16} = 1.0646$;
Adiabatic curve—steam,	$n = 1.035 + 0.14$;
" " gas,	$n = 1.408$;
Isothermal " "	$n = 1.0$.

These three expansion curves† are represented in Fig. 262; the pressures from 0 to 90 pounds per square inch are represented by the ordinates, and the volumes in cubic feet corresponding to one pound in weight are represented by abscissæ.

* Rankine's Steam-engine, page 385.

† See Thurston's Engine and Boiler Trials, page 251.

In the figure the curve A to G is the hyperbola, A to I the saturation curve, and A to L the adiabatic curve. ON is the axis of the hyperbola, of which OB and OH are asymptotes. It is to be noticed that the saturation curve corresponds to a uniform quality of steam, the adiabatic curve to a condition in which the moisture is increasing, and the hyperbolic curve

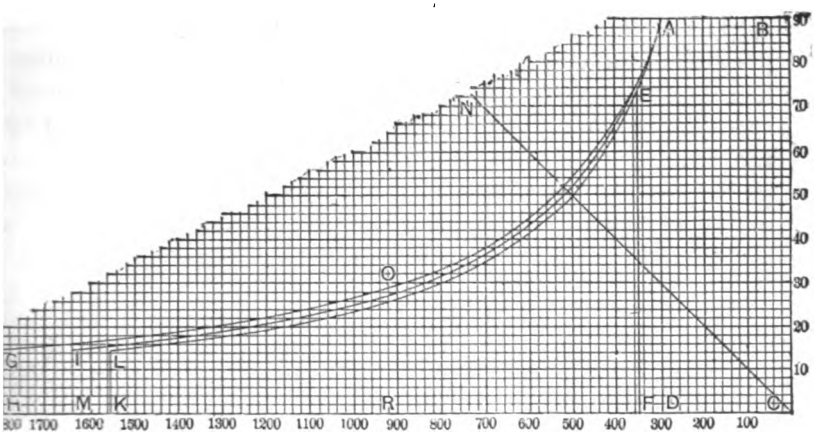

FIG. 262.—THE THREE EXPANSION CURVES.

to a condition in which the moisture is decreasing, the latter agreeing more closely with the actual condition.

406. Weight of Steam from the Indicator-diagram.—The diagram shows by direct measurement the pressure and volume at any point in the stroke of the piston; the weight per cubic foot for any given pressure may be taken directly from a steam-table. The method, then, of finding the weight of steam for any point in the stroke is to find the volume in cubic feet, including the clearance and piston displacement to the given point, which must be taken at cut-off or later, and multiply this by the weight per cubic foot corresponding to the pressure at the given point as measured on the diagram. This will give the weight of steam in the cylinder accounted for by the indicator-diagram, per stroke. In an engine working with compression, the weight of steam at terminal pressure

filling the clearance-space is not exhausted; this weight, computed for a volume equal to clearance and with weight per cubic foot corresponding to compression pressure, should be subtracted from the above. This may be reduced to pounds of steam per I. H. P. per hour, by multiplying by the number of strokes required to develop one horse-power per hour of time.

The method of computing would then be: Find the weight per cubic foot, from a steam-table corresponding to the absolute pressure, at the given point, multiply this by the corresponding volume in cubic feet, including clearance, and this by the number of strokes per hour. Correct this for the steam imprisoned in the clearance-space. Divide this by the horse-power developed, and we shall have the consumption in pounds of dry steam per I. H. P. as shown by the diagram. Thus let

A = area of piston in square feet;
a = " " " " " inches;
N = number of strokes per hour;
n = " " " " minute;
w = weight of cubic foot of steam at the given pressure;
l = total length of stroke in feet;
l_a = length of stroke in feet to point under consideration;
c = per cent of clearance; $l' = l_a + cl$; b = corresponding per cent;
w' = weight of cubic foot of steam at compression pressure.

Then the consumption of dry steam in pounds per hour per horse-power (indicated).

$$S = \frac{NAl}{\text{H.P.}}(bw - cw') = \frac{60l}{144}\frac{na(bw - cw')}{\frac{pla\,n}{33{,}000}} = \frac{13{,}750[bw - cw']}{p}$$

The above equation corrects for the steam caught in the clearance spaces during compression.

As an *example:* Compute the steam consumption as shown in Fig. 257 at point of cut-off E and at terminal pressure.

The absolute pressure shown by the diagram is 97 pounds at cut-off and 37 at end of the stroke. Neglect steam in clearance.

The length of stroke total is 3 feet, at cut-off is $\frac{3}{4}$ foot.

Clearance is 3.2 per cent. M. E. P. (p) is 50 pounds.

Steam-consumption at Cut-off.—From steam-table $w=0.2208$.

$$S = 13{,}750\frac{(0.2208)}{50}\frac{(0.75+0.09)}{3} = 16.17 \text{ lbs. per I.H.P. per hour.}$$

Steam-consumption at End of Stroke.—From steam-table $w = 0.0896$.

$$S = 13{,}750\frac{(0.0896)}{50}\frac{(3+0.09)}{3} = 25.37 \text{ lbs. per I.H.P. per hour.}$$

This, it should be noticed, is not the actual weight of steam used per horse-power by the engine, but is that part which corresponds to the amount of dry steam remaining in the cylinder at the points under consideration. The amount is usually less when computed at cut-off than at the end of the stroke, since some of the steam which was condensed when the steam first entered the cylinder is restored by evaporation during the latter portion of the period of expansion.

The equations and examples as given above apply only to a simple engine. They may be applied to a compound or triple-expansion engine by considering that all the work is done in the low-pressure cylinder as represented on a combined diagram. In such a case, p of the formula would equal the equivalent M. E. P. for the combined diagram. That is, $p'/r+p''=p$, in which r is the ratio of the areas of the cylinders, p' the M. E. P. of the high-, and p'' that of the low-pressure cylinder.

If we consider the steam-consumption only for the end of the stroke, l_a of equation (1) becomes equal to l, and the equation reduces to the following form:

$$S_t = 13{,}750\frac{w}{p}(1+c). \quad \ldots\ldots \quad (2)$$

Neglecting the clearance,

$$S_t = 13{,}750\frac{w}{p}; \quad \ldots \ldots \ldots \quad (3)$$

in which p = the M. E. P. of the diagram, and w the weight per cubic foot corresponding to the terminal pressure. Formula (3) has been tabulated as follows:

Thompson's tables, given in the Appendix, give values of $13{,}750w$, and the tabular values must be divided by the M. E. P. to give the steam-consumption per I. H. P. per hour.

Tabor's tables give values of $\frac{13{,}750}{p}$, and the tabular values must be multiplied by the weight of a pound of steam corresponding to the terminal pressure, to give the steam-consumption.

Williams's tables, published in the Crosby catalogue, give values of $\frac{p}{425.43}$, and the results in each case have to be multiplied by $32.32w$ to give the steam-consumption.

A graphical correction is made in all cases for compression by drawing a horizontal line through the terminal pressure to compression line of diagram, and multiplying the result given in the table by the ratio of the portion of this line intercepted between terminal point and compression, to the whole stroke.

407. Clearance Determined by the Diagram.—The clearance is usually to be determined by actual measurement of the volume of the spaces not swept through by the piston, and comparing this result with the volume of piston-displacement, the ratio being the clearance. Since the expansion and compression lines of the diagram are nearly hyperbolæ, the clearance line can be drawn by a method nearly the reverse of that used in constructing an hyperbola (Article 404).

In this case proceed as follows: Lay off the vacuum line CD (Fig. 207) parallel to the atmospheric line FT, and at a distance corresponding to the atmospheric pressure. The position of the clearance line can be determined by two methods, corresponding to those used in drawing the hyperbola. *First*

method: Take two points, *a* and *b* in the expansion curve and *c* and *d* in the compression line, and draw horizontal and vertical lines through these points, forming rectangles *aa'bb'* and *cc'dd'*. Draw the diagonal of either rectangle, as *a'b'*, to meet the vacuum line *CD*: the point of intersection *C* will be

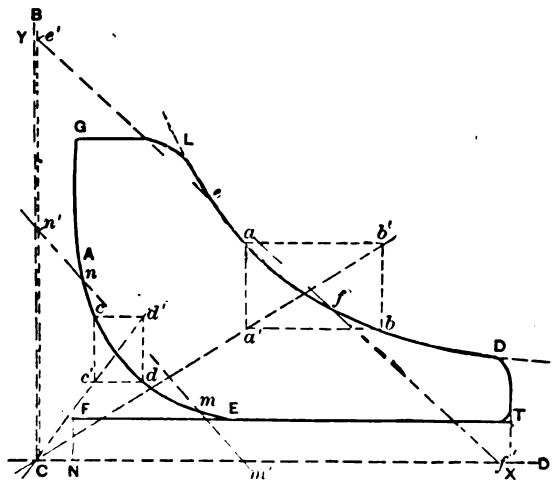

FIG. 263.—METHODS OF FINDING THE CLEARANCE.

a point in the clearance line *CB*, and the clearance will equal $CN \div FT$. *Second method:* Draw a straight line through either curve, as *mn* through the compression curve or *ef* through the expansion curve, and extend it in both directions. On the line *m'n'* lay off *nn'* equal to *mm'*, or on the line *e'f'* lay off *ee'* equal to *ff'*; then will either of the points *e'* or *n'* be in the clearance line and the line drawn perpendicular to the vacuum line through either of these points is the clearance line. In an engine working with much compression the clearance will be given more accurately from the compression curve than from the expansion curve, since it is more nearly an hyperbola.

408. Re-evaporation and Cylinder Condensation.—By considering the hyperbolic curve as a standard, an idea can be obtained of the restoration by re-evaporation and the loss by

cylinder condensation. Thus in Fig. 264, su
the point of cut-off at boiler-pressure, constru
as explained; in the example considered it is
the expansion line for a short distance after cut
the line at *b*, and remain below it nearly to
stroke. The amount by which the expansion
the hyperbola may be considered as due to
The area of the diagram lying above would repr
added by heat returned to the steam from the c

The methods for determining the cylinder co

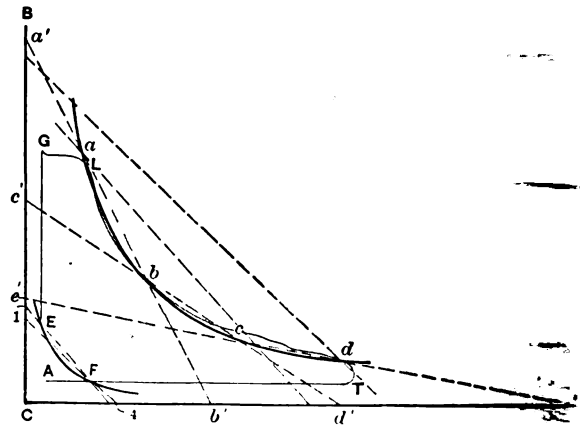

FIG. 264.—WORK RESTORED BY RE-EVAPORATION.

similar to this process, except that the hyperbola
drawn upward from the point corresponding to the
pressure, to meet a horizontal line drawn to represent t
pressure, as follows:

This construction is shown by the dotted line
diagrams in Fig. 265. The area of the figure enclose
dotted lines, compared with that of the diagram, is t
that the ideal diagram bears to the real; the differenc
loss by cylinder condensation.

The student should understand that both these n
are approximations which may vary much from the tru

409. Discussion of Diagrams.—Diagrams are ofte

where some portion of the engine is out of adjustment, or the indicator or reducing motion is not in perfect order. It is often

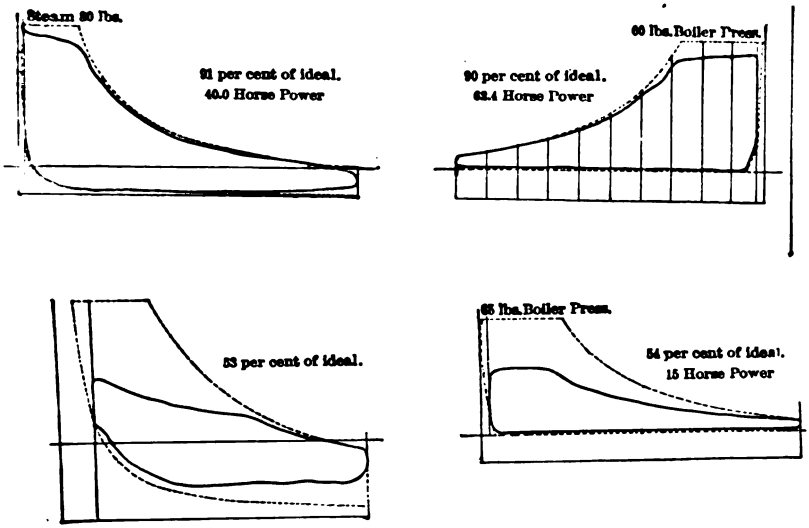
Steam 80 lbs.
91 per cent of ideal.
40.0 Horse Power
60 lbs. Boiler Press.
90 per cent of ideal.
62.4 Horse Power
83 per cent of ideal.
65 lbs. Boiler Press.
84 per cent of ideal.
15 Horse Power

FIG. 265.—LOSS BY CYLINDER-CONDENSATION.

possible in such cases to determine the defect from the diagram, and to suggest the proper remedy. A few examples are submitted. Such examples could be multiplied indefinitely, and skill and experience will, in general, be required to prop-

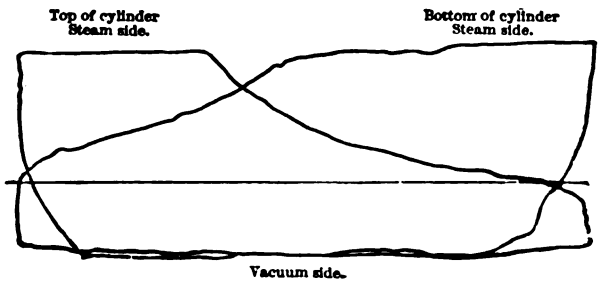

FIG. 266.—UNSYMMETRICAL VALVE-SETTING.

erly interpret them. Thus Fig. 266 is an illustration of a diagram taken when the valves were set unsymmetrically. Curves or waves in the expansion or compression lines indicate inertia-

effects in the drum-motion, which is sometimes sufficient to make the compression line concave when it should be convex, as shown in the lower diagram of Fig. 267. Vertical curves are due in large measure to vibrations in the pencil-lever and indicator-spring; they are usually excessive with a light spring and high speed. In the case of an automatic engine running under variable loads, each revolution will show a different diagram, as shown in Fig. 267.

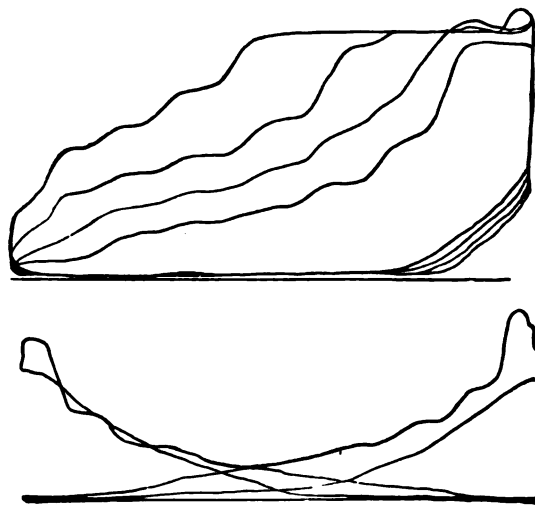

FIG. 267.—VARIATION OF LOAD.

Different Forms of Admission-lines.—The form of the admission-line is changed * according to the relative time of valve-opening and position of piston in its stroke.

The normal form is shown at *A*. In *B C D* and *E* the valve opens late, and after the piston has started on its return stroke. In *F* and *G* the exhaust-valve closes late, so that live steam escapes. *H* and *I* are familiar examples of extreme compression, produced on high-speed automatic engines working with a light load. *J* shows a sharp corner above the compression

* Power, September 1891.

line, and in general indicates too much lead. In case the valve opens too early, the admission-line leans as at *K*.

410. Diagrams from Compound and Triple-expansion Engines.—The diagram from any cylinder of a compound or triple-expansion engine is not likely to differ in any noticeable

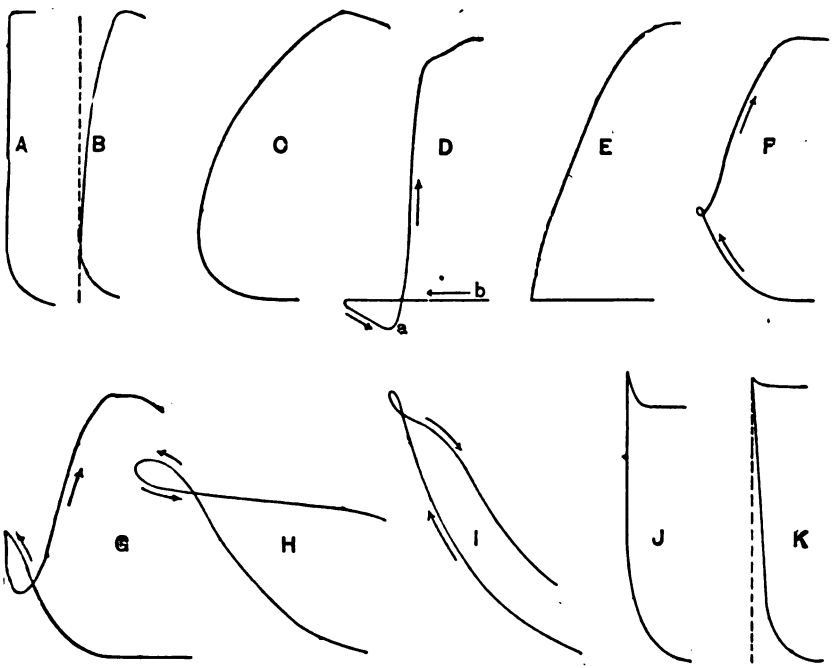

FIG. 268.—TYPICAL ADMISSION-LINES.

particular from those taken from a simple engine as already described. They are usually taken with different springs for the different cylinders, but may have very nearly or exactly the same lengths.

The diagrams from a compound engine may be reduced to an equivalent diagram, taken from a single cylinder by the following method: Lay off a vertical line *OB*, and a horizontal line *PQ*. Let *PQ* be the vacuum line, and *BC* the line of

highest steam-pressure acting in the small cylinder. Lay off ON proportional to the volume of the small cylinder, and OP proportional to the volume of the large cylinder. Let FA be the line of back pressure of the large cylinder, AD that of the small cylinder: then $BCDA$ is the diagram from the small cylinder, $EKFA$ that from the large cylinder.

To combine them into one diagram, draw a line KGH parallel to POQ, intersecting both diagrams, and lay off upon it $HL = KG$; and $GL = GH + KG$ represents the total volume

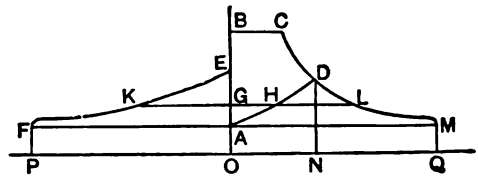

FIG. 269.

in both cylinders when the pressure is OG, and L is a point in the expansion line the same as though the action took place in the large cylinder only. In the same way other points may be found, and the line $CDLM$ drawn. This diagram may be discussed as if it represented the steam acting in the large cylinder only.

Fig. 270 is a combined diagram from a triple-expansion engine,* in which the cylinders have the ratio of 1 : 2.25 : 2.42, and the total ratio of expansion is 8. The length of each diagram is made proportional to the total volume of the cylinder from which it was taken; the diagrams are all drawn to the same scale of pressures, and each is located at a distance from a vertical line proportional to the volume of its clearance. From the point of cut-off corresponding to boiler-pressure an hyperbola is drawn as has been explained, and the area surrounding the diagrams is shaded. The work done in the three cylinders can be computed from the diagram as though done in one only.

* See Thurston's Engine and Boiler Trials, page 202.

411. Crank-shaft and Steam-chest Diagrams.—Diagrams may be taken with the motion of the indicator-drum proportional to any moving part of the engine, as for instance the crank-shaft.

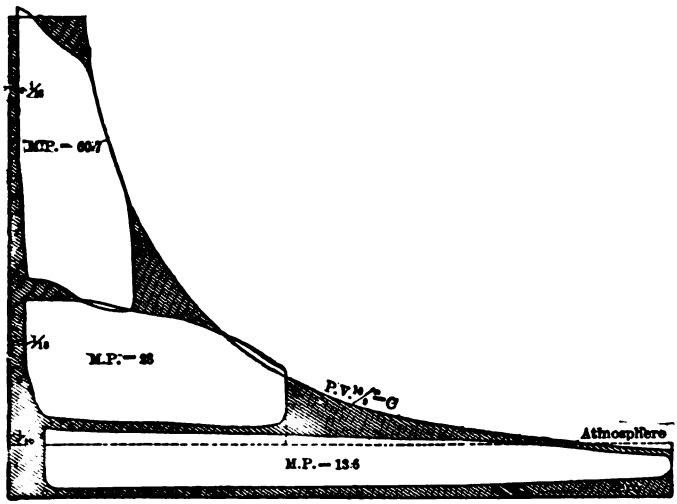

FIG. 270.—COMBINED DIAGRAM FROM TRIPLE-EXPANSION ENGINE.

In such a case, shown by Fig. 271 the ordinates will be as before proportional to the pressures per square inch acting on the piston, but the abscissæ will correspond to distances moved

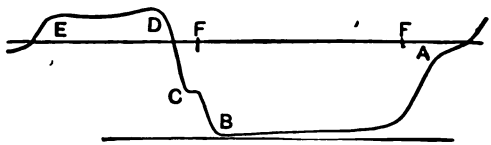

FIG. 271.—SHAFT-DIAGRAM.

through by the crank-pin. In Fig. 271, *A* to *B* is the exhaust, from *B* to *C* compression, *D* to *E* steam line, *E* to *A* expansion. Diagrams may also be taken with the indicator mounted on the valve-chest; in this case the indicator would show variation in pressure in the steam-chest.

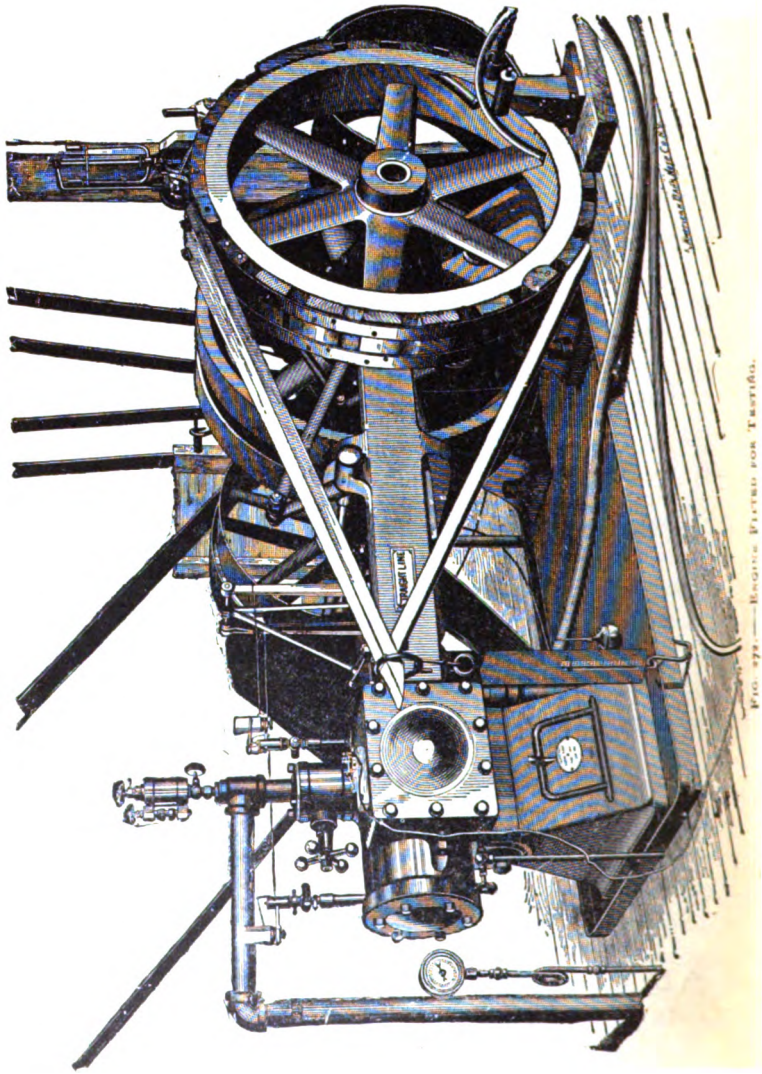

FIG. 272.—Engine Fitted for Testing.

Digitized by Google

CHAPTER XVIII.

METHODS OF TESTING THE STEAM-ENGINE.

412. Standards Employed in Engine-testing. — The unit of work ordinarily used in engine-testing is the horse-power (H.P.), which may be either that shown by the indicator and known as the indicated horse-power (I.H.P.), or that delivered from the engine, which is known as delivered or brake horse-power (D.H.P.). The horse-power is equivalent to 33,000 foot-pounds or 42.413 B.T.U. per minute, or to 1,980,000 foot-pounds or 2545 B.T.U. per hour.

Fuel, Steam, and Heat Consumption.—The ordinary standard of comparison of the economy of the work done by different engines is the weight of fuel or steam, or the number of B.T.U. required by the engine for each horse-power of work indicated or delivered per hour. The heat consumption, B.T.U. per H.P. hour, presents the advantages over the others of being more concise and definite.

Duty.—This term is applied to the work performed by pumping-engines, expressed in foot-pounds, for the consumption of 100 pounds of coal, 1000 pounds of steam, or 1,000,000 B.T.U. See Art. 254.

Perfect Engine.—The performance of a perfect engine is frequently employed as a standard of comparison. The perfect engine is one which transforms all the available heat received and not rejected into mechanical work. Such an engine operates in a reversible or Carnot cycle and has a thermodynamic efficiency of $(T_1 - T_2)/T_1$, in which T_1 is the absolute temperature of the entering steam and T_2 that of the exhaust.

The heat (B.T.U.) consumed per H.P. hour for an engine of this kind is evidently

$$h = 2545\ T_1/(T_1 - T_2).$$

The least possible weight of steam will be used in the per-

fect engine when the difference between the heat entering, i, and that discharged, q, has all been converted into work. Hence the least possible steam consumption per H.P. hour of the perfect reversible engine is

$$G = \frac{2545}{\lambda - q}\left(\frac{T_1}{T_1 - T_2}\right).$$

Rankine Cycle.—The maximum amount of heat which can be transformed into work in the perfect non-reversible engine is given by Professor Rankine per pound of steam as follows:

$$K = T_1 - T_2 - T_2 \log \frac{T_2}{T_1} + r\left(1 - \frac{T_2}{T_1}\right).$$

This expression is frequently used as a standard of comparison by British engineers, and the cycle on which such an engine works is termed the Rankine cycle.

The efficiency of the steam-engine is expressed in various ways as follows:

1. *Thermal Efficiency.*—This is the ratio of the work actually done (A.W.), expressed in heat units, to the total heat supplied (Q) in the steam. It is equal to AW/Q.

2. *Thermodynamic Efficiency.*—This is the greatest possible ratio of work done by the working substance to the mechanical equivalent of the heat expanded on it to do that work. In the Carnot reversible cycle this efficiency equals $(T_1 - T_2)/T_1$.

3. *Mechanical Efficiency.*—This is the ratio of the work actually delivered (D.H.P.) to that done on the piston and shown by the indicator (I.H.P.).

4. *Plant Efficiency.*—This is equal to the product of the several efficiencies of the various parts or machines which compose the plant.

413. Objects of the Engine-test. — The test may be made: 1. To adjust the valves or working parts of the engine. 2. To determine the indicated or dynamometric horse-power. 3. To ascertain the friction for different speeds or conditions. 4. To determine the consumption of fuel or steam per horse-power per hour. 5. To investigate the heat-changes which

characterize the passage of the steam through the engine. The general method of the test will depend largely on the object for which the test is made; in any event the apparatus to be used should be carefully calibrated, the dimensions of the engine obtained, and the test conducted with care.

414. Measurements of Speed.—The various instruments employed for measurement of speed are *speed-indicators, tachometers, continuous counters,* and *chronographs.*

Where the number of revolutions only is required, it is usually obtained either by counting or by the hand speed-indicator. Counting can be done quite accurately without an

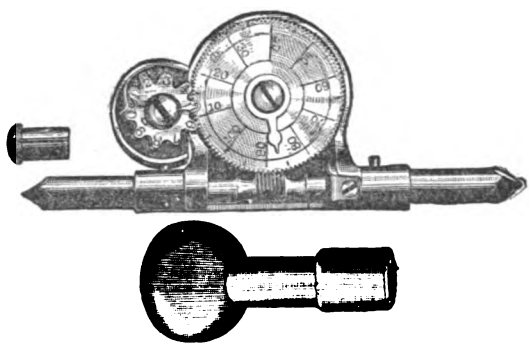

FIG. 273.—DOUBLE-ENDED SPEED-INDICATOR.

instrument, by holding a stick in the hand in such a position that it is struck by some moving part, as the cross-head of an engine, once in each revolution. The *hand speed-indicator,* of which one form is shown in Fig. 273, consists of a counter operated by holding the pointed end of the instrument in the end of the rotating shaft. In using the instrument, the time is noted by a watch at the instant the counting gears are put in operation or are stopped. A stop-watch is very convenient for obtaining the time. The errors to be corrected are principally those due to slipping of the point on the shaft, and to the slip of the gears in the counting device in putting in and out of operation. The best counters have a stop device to prevent this latter error, and the gears are engaged or disengaged with

the point in contact with the shaft. To prevent slipping of the point, the end of the instrument is sometimes threaded and screwed into a hole in the end of the shaft.

The *continuous counter* consists of a series of gears arranged to work a set of dials which show the number of revolutions. The arrangement of gearing in such an instrument is shown in Fig. 274. The instrument can usually be made to register by either rotary or reciprocating motion, and can be had in a

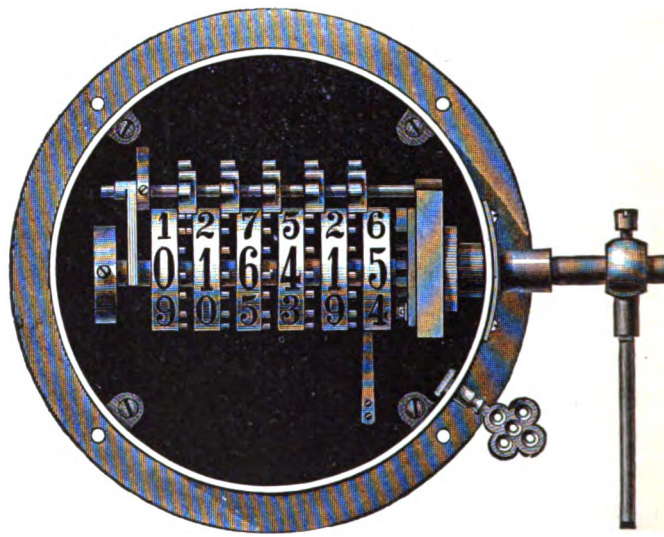

FIG. 274.

square or round case. The reading of the counter is taken at stated intervals and the rate of rotation calculated.

Tachometers (see Fig. 275) are instruments which utilize the centrifugal force in throwing outward either heavy balls or a liquid. The motion so caused moves a needle a distance proportional to the speed, so that the number of revolutions is read directly from the position of the needle on the graduated dial. The tachometer is arranged with a pointed end to hold against the shaft whose speed is to be determined, or with a pulley so that it may be driven by a belt.

Brown's Speed-indicator consists of a U-shaped tube joined to a straight tube in the centre. The revolution of the U-tube around the centre tube induces a centrifugal force which ele-

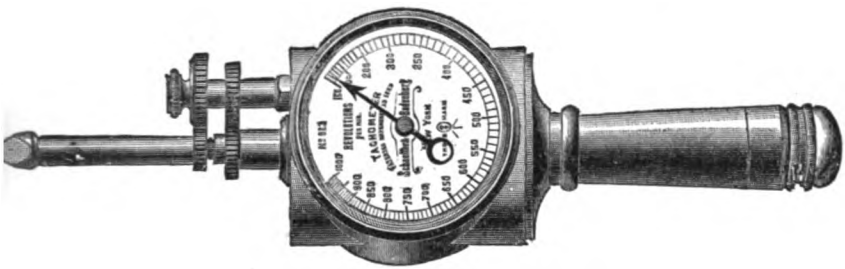

FIG. 275.—SCHAEFFER AND BUDENBERG HAND TACHOMETER.

vates mercury in the revolving arms and depresses it in the centre tube. A calibrated scale gives the number of revolutions corresponding to a given depression.

415. The Chronograph.—The chronograph,* Fig. 276, consists of a drum revolved by clock-work so as to make a

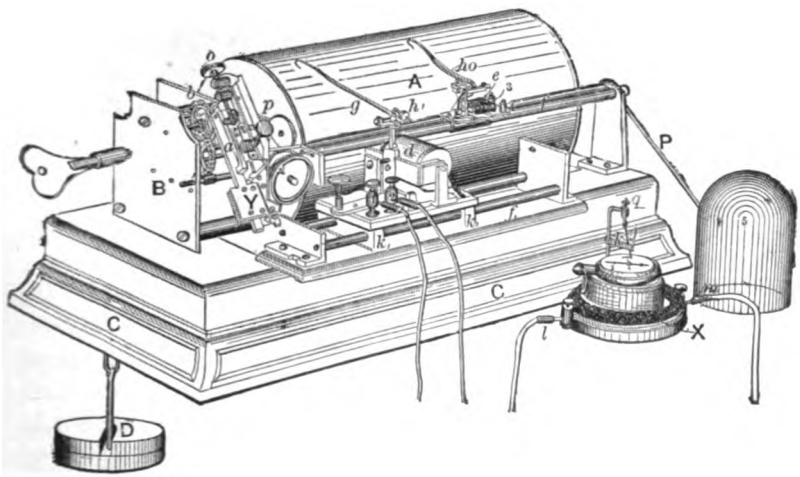

FIG. 276.

definite number of revolutions per minute. A carriage having one or two pens, *h*, *g*, as may be required is moved parallel

* See Thurston's Engine and Boiler Trials, page 226.

to the axis of the cylinder by a screw which is connected with the chronograph-drum *A* by gearing.

The pen in its normal condition is in contact with the paper, and it is so connected to an electro-magnet that it is moved axially on the paper whenever the circuit is broken. The circuit may be broken automatically by the motion of a clock, or by hand with a special key, or by any moving mechanism. Two pens are usually employed, one of which registers automatically the beats of a standard clock; the other may be arranged to note each revolution or fraction of a revolution of a revolving shaft. The distance between the marks made by the clock gives the distance corresponding to one second of time; the distance between the marks made by breaking the circuit at other intervals represents the required time which is to be measured on the same scale.

This instrument has been in use by astronomers for a long time for minute measurements of time, and by its use intervals as short as one one-hundredth (.01) part of a second can be measured accurately.

Tuning-fork Chronograph.—A tuning-fork emitting a musical note makes a constant and known number of vibrations. The number of vibrations of the fork corresponding to the musical tones are as follows:

Note	C	D	E	F	G	A	B	C,
Vibrations per second.	128	144	160	170⅔	192	213⅓	240	256

If now a small point or stylus be attached to one of the arms of a tuning-fork, as shown in Fig. 276,*—in which *F* is one of the arms of the tuning-fork, and *CAED* a piece of elastic metal to which the stylus, *AP*, is attached,—and if the fork be put in vibration and the stylus permitted to come in contact with any surface that can be marked, as a smoked and varnished cylinder moved at a uniform rate, the vibrations of the tuning-fork will be recorded on the cylinder by a series of wavy lines, as shown in Fig. 279; the distance between the

* See Thurston's Engine and Boiler Trials, page 233.

waves corresponding to known increments of time. If each revolution or portion of a revolution of the shaft whose speed is required be marked on the cylinder, the distance between such marks, measured to the same scale as the wavy lines made by the tuning-fork, would represent the time of revolution.

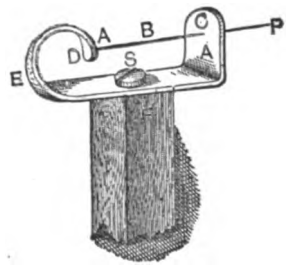

FIG. 277.—STYLUS FOR TUNING-FORK.

Fig. 278 (from Thurston's Engine and Boiler Trials) represents the Ranson chronograph; in this case the tuning-fork is moved axially by a carriage operated by gears, and is kept in vibration by an electro-magnet. The operation of the instrument is the same as already described. The form of the record being shown in Fig. 279; the wavy marks being those

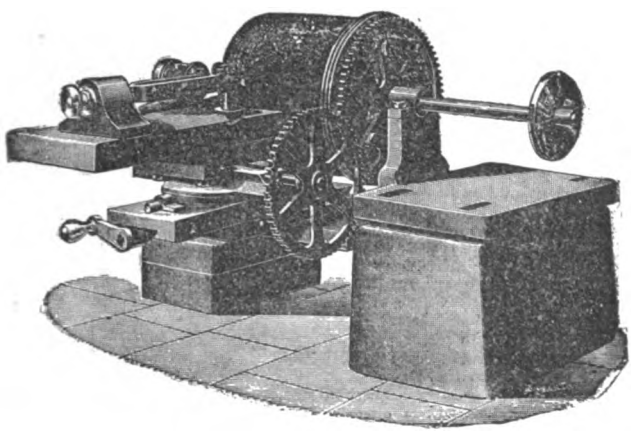

FIG. 278.—TUNING-FORK CHRONOGRAPH.

made by the tuning-forks, those at right angles being made at the end of a revolution of the shaft whose speed is required.

The tuning-fork with stylus attached,* as in Fig. 277, can be made to draw a diagram on a revolving cylinder connected

* See Engine and Boiler Trials, page 234.

directly to the main shaft of the engine, or the shaft itself may be smoked and afterward varnished. If the fork be moved axially at a perfectly uniform rate, the development of the lines drawn will be for uniform motion, straight and of uniform pitch; but for variations in speed these lines will be

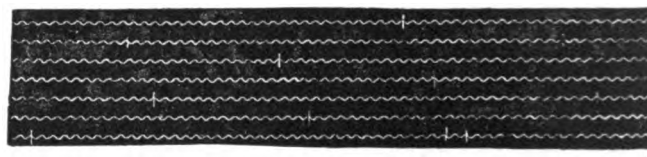

FIG. 279.—SPEED-RECORD FROM CHRONOGRAPH.

curved and at a varying distance apart. From such a diagram the variation in speed during a single revolution can be determined.

416. Autographic Speed-recorder.—Variations in speed are shown autographically in several instruments by recording on a strip of paper moved by clock-work the variation in centrifugal force of revolving weights. In the Moscrop speed-recorder, shown in Fig. 280, the shaft *B* is connected with the shaft whose speed is to be measured. The variation in the height of the balls near *B*, caused by variation in speed, gives the arm *C* a reciprocating motion, so that an attached pencil makes a diagram, *FED*, on the strip of paper moved by clock-work. The ordinates of this diagram are proportional to the speed.

417. The Surface Condenser.—In the measurement of the steam used by the engine the surface condenser is frequently employed. The surface condenser usually consists of a vessel in which are a great many brass tubes. It is usually arranged so that the exhaust steam comes in contact with the outer surface of these tubes, and the condensing water flows through the tubes. The condensed steam falls to the bottom of the condenser and is removed by an air-pump; the heat of the steam being taken up by the condensing water. If the condenser is free from leaks, the air-pump of ample size and with little clearance, and if the proper temperatures are main-

tained, nearly all the atmospheric pressure can be removed from the condenser and the back-pressure on the engine correspondingly reduced.

The surface condenser affords more accurate means of

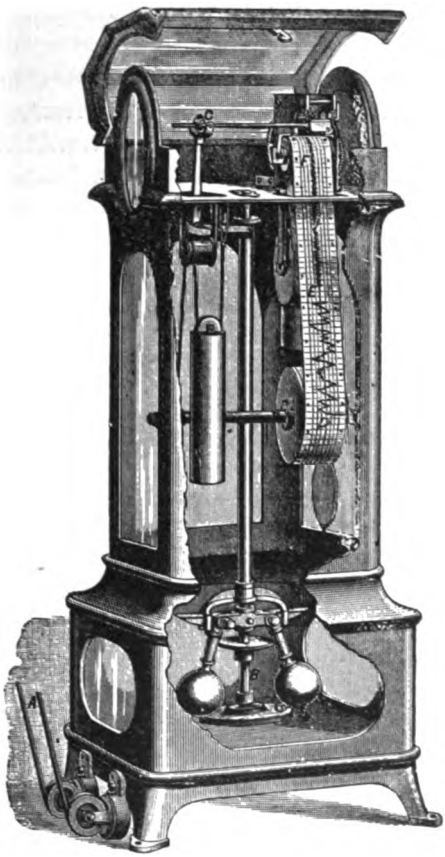

FIG. 280.—THE MOSCROP SPEED-RECORDER.

obtaining the water-consumption of a steam-engine than the measurement of feed-water during a boiler-test, since the effect of steam-leaks are to a great extent eliminated.

The condenser should be tested for leaks by noting how

long a given reading of the vacuum-gauge can be maintained when all the connecting valves are closed, or by turning on steam when the water-pipes are empty, or *vice versa*, and noting whether there is any leakage.

FORM FOR TEST ON CONDENSER.

Date.....

Duration of test.....min.
Barometer.....inches. .....lbs. per sq. in.
Temperature, entering steam.....C. .....F.
Temperature, condensed steam.....C. .....F.
Temperature, cold condensing water.....C. .....F.
Temperature, hot condensing water.....C. .....F.
Hook-gauge reading (corrected) .....inches.
(Hook-gauge reading) ‡.....
Temperature at weir.....C. .....F.
Weight of condensed steam.....lbs.
Breadth of weir.....inches.
End area of.....tubes.....sq. ft.
Area steam surface.....sq. ft.
Area water surface.....sq. ft.
Weight steam condensed per hour.....lbs.
Weight condensing water used per hour.....lbs.
Weight steam condensed per pound of water.....lbs.
Weight steam condensed per sq. ft. steam surface per hour.....lbs.
Weight steam condensed per sq. ft. water surface per hour.....lbs.
Velocity of water through tubes.....ft. per sec.
Heat acquired by condensing water used per hour.....B. T. U.
Heat given up by steam condensed per hour.....B. T. U.

Signed.....

418. Calibration of Apparatus for Engine-testing.— Before commencing any important test, all instruments and apparatus to be used should be adjusted and carefully compared with standards, under the same conditions as in actual practice. The errors or constants of all instruments should be

noted in the report of the test, and corresponding corrections made to the data obtained.

The instruments to be calibrated are:

1. *Steam-gauge.*—Compare with mercury column, or with standard square-inch gauge, for each five pounds of pressure, reading both up and down throughout the range of pressures likely to be used in the test. (See Article 282, page 366.)

2. *Steam-engine Indicator-springs.*—Put the indicator under actual steam-pressure (see Art. 393, p. 535) and compare the length of ordinate of the card with the reading of the mercury column or a standard gauge for the same pressure. Take ten readings, both up and down, through an extreme range equal to two and one-half times the number on the spring. The steam-pressure may be varied by throttling the supply and exhaust. The ordinate may also be compared by a special method with readings of a standard scale; the indicator being heated by the flow of steam through a rubber tube wound around it.

3. *Speed-indicators.*—The accuracy can be checked by hand counting. For the best work chronographs should be used. Continuous counters are necessary for accuracy in a long run. (See Articles 414 and 415.)

4. *Indicator Reducing-motion.*—This may be tested by dividing the stroke of the engine on the guides into twelve equal parts and noting whether the card is similarly divided. It should be tested for both return and forward stroke. When the form of the card is considered, this is an important matter, as many reducing-motions distort its shape. (See Article 390, page 528.)

5. *Indicator-cords and Connections.*—See that the connecting cords do not stretch at high speeds, and that the drum-spring of the indicator has a proper tension and gives a correct motion of the drum. This is important. (See Article 395.)

6. *Weighing-scales.*—Compare the readings with standard weights.

7. *Water-meters.*—Calibrate by actually weighing the discharge under conditions of use as regards pressure and flow.

In case meters are used, temperatures of the water must be taken in order to obtain the weight. (See Article 213, page 283.)

8. *Thermometers.*—Test the thermometer for freezing-point by comparison with water containing ice or snow; test for boiling-point by comparison with steam at atmospheric pressure in the special apparatus described on page 381, the correct boiling-point being determined by readings of the standard barometer. The other tests of the thermometer can in general be left to the makers of the instrument. In cases where great accuracy is required the readings should be compared throughout the whole scale with a standard air-thermometer, as described on page 350.

9. *Pyrometer.*—Compare with a standard thermometer while immersed in steam for the lower ranges of temperature, and with known melting-points of metals for higher. The correction may also be determined by cooling heated masses of metals in large bodies of water and calculating the temperature from the known relations of specific heats. (See Articles 298 to 304).

10. *The Planimeter*, which is used for measuring the indicator-diagram, should be calibrated by making a comparison with a standard area, as explained in Article 38, page 52. The following form is useful to record the results of calibrations:

BLANK FORM FOR CALIBRATION OF INSTRUMENTS.

STEAM-ENGINE INDICATOR-SPRINGS.

Used on	Head.	Crank.
Maker's name.....		
Maker's number.....		
Scale of spring.....		
Number of spring.....		
When tested.....		
How tested.....		
Per cent error.		

STEAM-GAUGES.

Maker.	Position.	Number.	Error, lbs.	When Tested.	How Tested.

THERMOMETERS.

Position.	Registered Number.	Boiling-point.			Freezing-point.			Barometer.
		Reading.	Per Barometer.	Error.	Reading.		Error.	

419. Preparations for Testing.—The preparations required will depend largely on the object of the test. They should always be carefully made, and in general are to include the following operations:

1. *Weighing of Steam.*—Prepare to weigh all the steam supplied the engine. This may be done by weighing or measuring all the feed-water supplied the boiler (see Article 375), provided there is no waste nor other use of steam; or it may be done by condensing (see Article 417) and weighing all the exhaust from the engine. In the first case especial precaution must be taken to prevent leaks, and in the latter to reduce the temperature of the condensed steam to 110° F. before weighing. The weights may in some cases be determined from a meter-reading (see Article 214).

2. *Quality of Steam.*—Attach a calorimeter (see Articles 330 to 336), which may be of the throttling or separator kind, to the main steam-pipe, near the engine. This attachment may be made by a half-inch pipe, cut with a long thread and extending three fourths across the main steam-pipe. This pipe

should be provided with large holes so that steam will be drawn from all parts of the main steam-pipe (see page 370).

3. *Leaks.*—The engine should be tested for piston-leaks by turning on steam with the piston blocked and cylinder-cocks opened on the end opposite that at which steam is supplied. If leaks are found, they should be stopped before beginning the test.

4. *Indicator Attachments.*—Arrange a perfect reducing-motion. The kind to be used will depend entirely upon circumstances. The lazy-tongs or pantograph is reliable for speeds less than 125, and can be easily applied. The pendulum pivoted above and furnished with an arc, although not perfectly accurate, is much used. Make yourself familiar with the various devices in use. (See Article 390).

5. An *Absorption Dynamometer* may be required; if so, arrange a Prony brake to absorb the power of the engine, and make provision for lubricating it and removing the heat generated (see Article 178, page 528). In many commercial tests the power is absorbed by machinery or in useful work, and the efficiency is wholly determined by measurements of the amount and quality of steam and from the indicator-diagram.

6. *Weight of Coal.*—This is generally taken during an engine-test, but will be treated here as pertaining to boiler-testing: the methods of weighing are fully described under that head (see Article 375).

An engine fitted completely for a test is shown in Fig. 272, from Thurston's Engine and Boiler Trials. In this case two indicators are employed, the drum-motion being derived from a pendulum reducing-motion; a Prony brake is attached to absorb and measure the power delivered, water for keeping the brake cool being delivered near the bottom and on the inside of the flanged brake-wheel by a curved pipe, and drawn out by another pipe the end of which is funnel-shaped and bent so as to meet the current of water in the wheel. The speed is taken by a Brown speed-indicator mounted on top of the brake, and also by a hand speed-indicator. The steam-pressure is measured

near the engine; the quality of steam is determined by a sample drawn from the vertical pipe near the engine.

420. Measurement of Dimensions of Engine.—Make careful measurements of the dimensions of engine; the diameter of piston, length of stroke, and diameter of piston-rod, as may be required.

Piston-displacement.—This is the space swept through by the piston; it is obtained by multiplying the area of the piston by the length of stroke. For the crank end of the cylinder the area of the piston-rod is to be deducted from the area of the piston.

Clearance is the space at the end of cylinder and between valve and piston, filled with steam, but not swept through by the piston. To measure the clearance, put the piston at end of its stroke and fill the space with a known weight of water, ascertaining that no leaks occur by watching with valve-chest cover and cylinder-head removed. Make this determination for both ends of the cylinder, and from the known weight of water compute the volume required.

This is usually reduced to percentage, by dividing by the volume of piston-displacement.

This last reduction may be obviated, as suggested by Prof. Sweet, by finding, after the clearance-spaces are full of water, how far the piston will have to move in order to make room for an equal amount of water; this distance divided by the full stroke is the percentage required. Another approximate way sometimes necessary is to fill the whole cylinder and clearance-spaces with water; from this volume deduct the piston-displacement and divide by 2.

Preliminary Run.—It will be found advisable to make a preliminary run of several hours before beginning the regular test, to ascertain if all the arrangements are perfect.

421. Quantities to be observed.—The observations to be taken on a complete engine-test are given in the following list.

Fill out the following blank spaces.

DESCRIPTION OF ENGINE.

Kind of engine.....	Lap of valve.....inches.
Maker's name.....	Scale indicator-spring.....
Brake-arm.....feet.	Piston area .....sq. in.
Diameter cylinder.... .....inches.	Steam-port area..... "
Length stroke.....feet	Exhaust-port area ..... "
Diameter piston-rod.....inches.	Diameter fly-wheel .....inches.
Diameter crank-pin..... "	Clearance, head..... ...lbs. water.
Length crank-pin..... "	" crank..... " "
Diameter wrist-pin..... "	" per cent P.D. head.....
Travel valve..... "	" " " " crank.....

LOG OF TEST.

Number...	Temperatures:
Time.....	Engine-room..... ..
Revolutions:	Condensed steam.....
Continuous counter.....	Feed-water.....
Speed-indicator.	Injection-water.....
Gauge-readings:	Discharge-water.....
Boiler.....lbs.	Calorimeter:
Steam-pipe..... "	Steam-pipe.....
Steam-chest..... "	Steam-chest.....
Exhaust.....inches hg.	Weights:
Condenser..... " "	Condensed steam.....
Barometer..... " "	Feed-water.....
Temperatures:	Injection-water.....
External air.....	Calorimeter.....

422. Special Engine-tests.—*Preliminary Indicator Practice.*—A simple test with the indicator will be found a useful exercise in rendering the student familiar with the methods of handling the indicator and of reducing and computing the data to be obtained from the indicator-diagrams. The directions are as follows:

Apparatus.—Throttling calorimeter; steam-gauge; two indicators; reducing-motion, and indicator-cord.

1. Obtain dimensions of engines. Measure the clearance, see that indicators are oiled and in good condition, and that

the reducing-motion gives a perfect diagram. Adjust the length of cord so that the indicator will not hit the stops. Prepare to take cards as explained in Article 398, page 545.

2. Take diagrams once in each five minutes, simultaneously from head and crank end of cylinder; take reading of boiler-gauge, barometer, gauge on steam-pipe or on steam-chest, vacuum-gauge if condenser is used, temperature or pressure of entering steam, temperature of room, and number of revolutions.

3. Measure or weigh the condensed steam during run.

4. From the cards taken compute the M. E. P. and I. H. P. for each card as required by the log.

5. Take a sample pair of diagrams, one from head and one from crank end. (*a*) Find clearance from diagrams (see Article 407, page 561); (*b*) draw hyperbolæ respectively from cut-off and release and find re-evaporation and cylinder condensation (see Article 408); (*c*) produce hyperbola from release to meet horizontal line representing boiler-pressure; complete the diagram with hyperbola from point of admission. Compute the work (I. H. P.) from this new diagram. Draw conclusions from the form of card (see Article 409).

6. Compute the steam-consumption per stroke and per I. H. P. at cut-off and at end of stroke from the diagram (see Article 406). Compare this with the actual amount as determined by the test.

7. From the weight of dry steam as shown by the indicator-diagram, and the actual weight as determined by the amount of condensed steam, determine the quality at cut-off and release.

8. Make report of test on the following form:

REPORT OF TEST ON.....ENGINE.

Date..... .....

Duration of test..... .....min.

Revolutions per min.....

Steam used per min..... ..... lbs

Barometer.....in. ..... "

	Crank End.	Head End.
Piston-displacement	..... cu. ft.	..... cu. ft.
Clearance (per cent of P. D.)	.....	.....
Engine constant	.....	.....
Cut-off (per cent of stroke)	.....	.....
Release (per cent of stroke)	.....	.....
Compression (per cent of stroke)	.....	.....
Pressure at cut-off	..... lbs.	..... lbs.
Pressure at release	..... "	..... "
Pressure at compression	..... "	..... "
Mean effective pressure	..... "	..... "

Revolutions per minute .....

Horse-power ..... C. E.; ..... H. E. ..... Total

	Per Stroke. C. E.	Per Stroke. H. E.	Per Revolution.	Per I.H.P.
Weight of steam at cut-off	.....	.....	.....	.....
Weight of steam at release	.....	.....	.....	.....
Weight of steam during compression	.....	.....	.....	.....

Re-evaporation per H. P. per hour ..... lbs.

Weight of water per revolution, actual ..... "

Weight of mixture in cylinder per revolution ..... "

Per cent of mixture accounted for as steam at cut-off .....

Per cent of mixture accounted for as steam at release .....

Weight of water per H. P. per hour, actual ..... lbs.

Weight of water per H. P. per hour, by indicator ..... "

Signed .....

423. Valve-setting.—This exercise will consist, first, in obtaining dimensions of ports and valves, and in drawing the valve-diagram corresponding to a given lead and angular advance, and setting the valve by measurement with a lead corresponding to that shown on the diagram. The valve-diagram may be drawn by Zeuner's * or Bilgram's method, as may be convenient; † from the valve-diagram draw the probable indicator-diagram and compute its area, and from that figure the indicated horse-power.‡

* See Valve-gears, by Halsey. D. Van Nostrand Co., N. Y.

† Valve-gears, by Peabody. J. Wiley & Sons, N. Y.

‡ Valve-gears, by Spangler. J. Wiley & Sons. N. Y.

The method of drawing the indicator-diagram by projection from the valve-diagram is well shown in Fig. 281, from Thurston's Manual of the Steam-engine. The steam-pressure and back-pressure lines being assumed, the various events as shown on the valve-diagram are projected upon these lines, and the indicator-diagram completed as shown.

Secondly, in attaching the indicators and taking diagrams

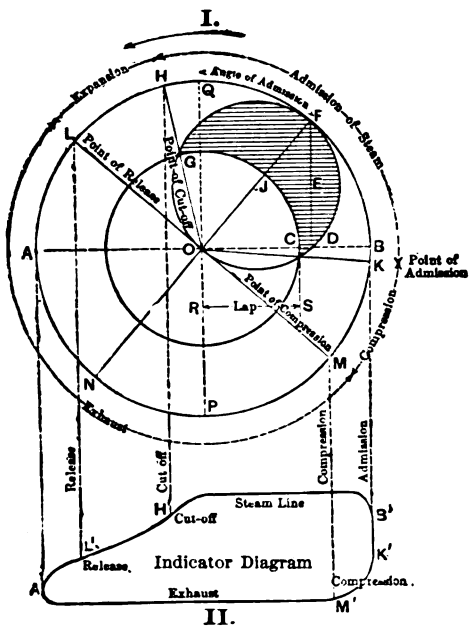

FIG. 281.—INDICATOR-DIAGRAM CONSTRUCTED FROM VALVE-DIAGRAM.

from which the error in the position of the valve is determined. Its position is corrected as required, to equalize the indicator-diagrams taken from each end of the cylinder.

The special directions are as follows:

Apparatus.—Scale, dividers, and trammel-point, the latter consisting of a rod the pointed end of which can be set on a mark on the floor and which carries a marking point at the other end.

1. Measure dimensions of valves and ports, throw of eccentric, and other dimensions called for by engine-log.

2. From these data, with a definite lead assumed, draw valve-diagram, and note position of piston for cut-off, release, compression, and admission.

3. Set the valve to the assumed lead, and with angular advance as indicated by the valve-diagram. Turn the engine over and see that the lead is the same at both ends of the cylinder.

This requires the engine to be set on its centre; this is done by bringing the piston to the extreme end of the stroke at either cylinder-end, so that the piston- and connecting-rods form one straight line. As the motion of the piston is very slow near the end of the stroke, this position is determined most accurately as follows: Mark a coincident line on cross-head and guides corresponding to the position of the crank when at an angle of about 20° measured from its horizontal position; then, from a fixed point on the floor, swing the trammel-point as a radius, and mark a line on the circumference of the fly-wheel; turn the engine over until the marks again coincide with the crank on the other side of the centre and make a second mark on the fly-wheel with the trammel-point; bisect the distance on the wheel between these marks and obtain a third line; turn the wheel until this line is shown by the trammel to be at the same distance from the reference-point, on the floor, as the other marks: the engine will then be on its centre. Move the valve the proper amount to make its position correspond with that shown on the diagram. *In setting the valve* remember that to *change angular advance*, the eccentric must be rotated on the shaft; and to *equalize events* for both ends of cylinder, the valve must be moved on the stem. These adjustments must be made together, as they are to some extent mutually dependent.

4. From the valve-diagram draw an ideal indicator-diagram as explained, assuming initial steam-pressure to be (a) pounds per square inch, absolute back pressure 5 pounds absolute, and that expansion and compression curves are true hyperbolæ.

Calculate its area by formula.

$$\text{Area} = PV(1 + \log_e r) - P_0V_0(1 + \log_e r'),$$

in which V = volume at cut-off, and P = corresponding pressure; V_c = clearance volume, and P_c = clearance pressure; r = number of expansions, and r' = number of compressions.

5. Compute the horse-power of the diagram so drawn, and compare with that shown by the diagram taken.

424. Friction-test.—For this test the engine should be fitted with a Prony brake (see Article 169, page 239, to absorb and measure the power developed. Indicator-diagrams are to be taken and the indicated horse-power computed (see Article 402, page 552). The indicated horse-power being the work done by the steam on the piston of the engine, the dynamometer horse-power, that delivered by the engine, the difference will be the power absorbed by the engine in friction, or the friction horse-power. It is customary to reduce this amount to equivalent mean pressure acting on the piston by dividing by product of area of piston in square inches and speed in feet per minute. In making the test for friction of the engine the loads on the brake-arm should be varied, with the speed uniform, or the load on the brake-arm should be constant with varied speed, noting in each case the effect on the frictional work. It has been shown by an extended series of experiments * that the friction of engines is practically constant regardless of the work performed, and that the work shown by the indicator-diagram, when the engine is running light or not attached to machinery, is practically equal to the engine-friction in case the speed is maintained uniform. In the case of variation in speed the friction work increases nearly in proportion to increase of speed.

Detailed directions for this test are not considered necessary.

425. Simple Efficiency-test.—Engines are frequently sold on a guarantee as to coal or water consumption per indicated horse-power (I. H. P.), or in some instances per dynamometer horse-power (D. H. P.); in such a case a test is to be made showing the I. H. P. or the D. H. P. as may be required, and the water and coal consumed.

* See Transactions Am. Soc. Mech. Engineers, Vol. VIII., page 86.

The I. H. P. is to be obtained as already explained in Article 402; the D. H. P. by readings from a Prony brake, Article 178. The coal-consumption is to be obtained by a boiler-test, Article 375; the total water consumed, by the feed water used in the boiler-test, corrected for leaks and quality; or by condensing the steam in a surface condenser, Article 417. The quality of the steam should be taken near the engine, as explained in Article 336, page 433. The principal quantities to be observed are quantities required for a boiler-test, quality of steam near engine, number of revolutions of engine per minute, and weight of feed-water or weight of condensed steam. These observations should be taken regularly and simultaneously once in ten or fifteen minutes, and at the same instant an indicator-diagram should be taken. From these data are computed the quantities required.

426. The Calorimetric Method of Engine-testing.—*Hirn's Analysis.*—The calorimetric method of testing engines as developed from Hirn's theory by Professor V. Dwelshauvers-Dery of Liège enables the experimenter to determine the amount of heat lost and restored and that transformed into work in the passage of the steam through the cylinder.*

The principle on which the method is founded is as follows: The amount of heat supplied the engine is determined by measuring the pressure, quality, and weight of the steam; that removed from the engine is obtained by measuring the heat in the condensed steam and that given to the condensing water. The amount of heat remaining in the cylinder per pound of steam at any point after cut-off can be calculated from the data obtained from the indicator-diagram; this multiplied by the known weight gives the total heat.

The heat supplied to the engine added to that already existing in the clearance-spaces gives the total amount of heat available; if from this sum there be taken the heat existing at cut-off and the heat equivalent of the work done during admission, the difference will be the loss during admission, due

* See Table Properties of Steam, V. Dwelshauvers-Dery, Trans. Am. Soc. M. E., Vol. XI.

principally to cylinder-condensation. The difference between the heat in the cylinder at cut-off and that at release after deducting the work equivalent is that lost or restored during expansion. This method applied to all the events of the stroke, and at as many places as required, gives full information of the transfer of heat to and from the metal.

In the fundamental equations of this analysis which follow, the following symbols are used :

Quantity.	Symbol.	Quantity.	Symbol.
Heat admitted per stroke....	Q	Heat equivalent of energy of	
Weight of steam per stroke...	M	steam in the cylinder at any	
Absolute pressure of entering		instant	h
steam, per sq. inch	p	Joule's equivalent	J
Temperature, degrees Fahr.	t	Reciprocal of Joule's equiva-	
Heat of the liquid	q	lent	A
Internal latent heat.....	ρ	Weight of 1 cu. foot of steam.	δ
Total latent heat.....	r	Vol. of 1 lb. of steam, cu. ft..	v
Quality of the steam.....	x	Volume of cylinder to any	
Degree of superheat	D	point under consideration	
Per cent of moisture.....	$1 - x$	moved through by the piston,	
Specific heat of steam of con-		cu. ft.....	V
stant pressure.....	c_p	Volume of clearance, cu. ft...	V_c
		External work in foot-pounds.	W
		Vol. of 1 lb. of water in cu. ft.	σ

The value of the quantity at any point under discussion is denoted by the following subscripts: clearance, c; beginning of admission, 0; cut-off, 1; release, 2; beginning of compression, 3.

The equations are as follows for wet or saturated steam:

Heat in the Entering Steam.—

$$Q = M(q + xr); \quad . \quad . \quad . \quad . \quad . \quad . \quad . \quad . \quad (1)$$

if the steam is superheated D degrees,

$$Q = M(q + r + c_p D). \quad . \quad . \quad . \quad . \quad . \quad . \quad (2)$$

Heat in the Cylinder.—Since the steam in this case is invariably moist, we have the following equations:

In the clearance spaces,	$h_c = M_0(q_c + x_c\rho_c)$; . . .	(3)
At admission,	$h_0 = M_0(q_0 + x_0\rho_0)$; . . .	(4)
At cut-off,	$h_1 = (M + M_0)(q_1 + x_1\rho_1)$; .	(5)
At release,	$h_2 = (M + M_0)(q_2 + x_2\rho_2)$; .	(6)
At compression,	$h_3 = M_0(q_3 + x_3\rho_3)$. . . .	(7)

The external work is to be determined from the indicator-diagram. Let the heat equivalent of this work be represented as follows:

During admission,	AW_a;	(8)
During expansion,	AW_b;	(9)
During exhaust,	AW_c;	(10)
During compression,	AW_d.	(11)

The volume in cubic feet, V, of a given weight of steam, M, can always be expressed by the formula

$$V = M(xu + \sigma); \quad . \quad . \quad . \quad . \quad . \quad . \quad (12)$$

in which u equal the excess of volume of one pound of steam over that of one pound of water; $u = v - \sigma$.

Substituting the value of u in the above equation,

$$V = M(xv + \sigma(1 - x)) \quad . \quad . \quad . \quad . \quad . \quad (13)$$

As σ is a very small quantity, $(1 - x)\sigma$ can be safely dropped as less than the errors of observation, and in all practical applications the formula used is

$$V = Mxv. \quad . \quad . \quad . \quad . \quad . \quad . \quad . \quad (14)$$

In the exact equation (13) or the approximate equation (14), if the pressure, weight, and volume of steam are known, its specific volume, v, can be found, and x may be computed.

At any point in the stroke after the steam-valve is closed, the volume and pressure of steam in the cylinder can be determined from the indicator-diagram if the dimensions of the engine and its clearance are known. If the weight of steam used is known from an engine-test, there can be determined from the indicator-diagram both the quality and amount of heat in the cylinder at any point, with the single exception of the steam remaining in the clearance spaces. Thus let V_c equal volume of clearance; $V_0 + V_c$, volume at admission, usually equal to V_c; $V_1 + V_c$, volume at cut-off; $V_2 + V_c$, at release; $V_3 + V_c$, at compression; M, the weight of steam used; M_0, the weight of steam caught and retained in the clearance spaces. Then, by method used in equation (12),

$$V_c = M_0(x_c u_c + \sigma_c); \quad . \quad . \quad . \quad . \quad . \quad . \quad . \quad (15)$$

$$V_0 + V_c = M_0(x_0 u_0 + \sigma_0); \quad . \quad . \quad . \quad . \quad . \quad (16)$$

$$V_1 + V_c = (M_0 + M)(x_1 u_1 + \sigma_1); \quad . \quad . \quad . \quad (17)$$

$$V_2 + V_c = (M_0 + M)(x_2 u_2 + \sigma_2); \quad . \quad . \quad . \quad (18)$$

$$V_3 + V_c = M_0(x_3 u_3 + \sigma_3). \quad . \quad . \quad . \quad . \quad . \quad (19)$$

In the above equations we know the volumes and pressures for each point, and the weight of steam, M, passing through the engine. So that in the five equations there are six unknown quantities: M_0, x_c, x_0, x_1, x_2, and x_3, of which x_0 may be assumed as 1.00 without sensible error. In the above equations, (15) and (16) are usually identical; they differ from each other only when there is a sensible lead which shows on the diagram.

The weight of steam in the clearance space is computed from equation (15):

$$M_0 = (V_c) \div (x_c u_c + \sigma_c) = V_c \div x_c v_c, \text{ nearly.}$$

Assume $x = 1.00$:

$$M_0 = V_c \div v_c \quad . \quad . \quad . \quad . \quad . \quad . \quad . \quad . \quad . \quad . \quad . \quad . \quad (20)$$

In computing the heat at any point, it is customary to compute the sensible and internal heat in two operations. Thus in equation (4) make h, the total heat, equal to H, the sensible heat, plus H', the internal heat; then

$$h_0 = H_0 + H_0' = (x_0\rho_0 + q_0)M_0;$$

or

$$H_0 = M_0 q_0, \quad . \quad . \quad . \quad . \quad . \quad . \quad . \quad . \quad . \quad . \quad . \quad (21)$$

$$H_0' = x_0\rho_0 M_0; \quad . \quad . \quad . \quad . \quad . \quad . \quad . \quad . \quad . \quad . \quad . \quad (22)$$

and in equation (5),

$$H_1 = q_1(M_0 + M), \quad . \quad . \quad . \quad . \quad . \quad . \quad . \quad . \quad . \quad (23)$$

$$H_1' = (x_1\rho_1)(M_0 + M). \quad . \quad . \quad . \quad . \quad . \quad . \quad . \quad . \quad (24)$$

From equation (17),

$$M_0 + M = \frac{V_1 + V_c}{x_1 u_1 + \sigma_1} = \frac{V_1 + V_c}{x_1 v_1 + \sigma(1-x)} = \frac{V_1 + V_c}{x_1 v_1}, \text{ nearly.} \quad (25)$$

By substituting in (24),

$$H_1' = \rho_1(V_1 + V_c) \div v_1;$$

which form is used in the computations that follow.

The analysis determines the loss of heat during a given period, by finding the difference between the heat in the cylinder at the beginning of the period and the sum of that utilized in work during the period and that remaining at the end of the period.

The following directions and example should make the method clearly understood.

The total heat received and discharged per stroke is obtained by testing. The distribution of the heat and its relations to the work performed is obtained by measurements from the indicator diagram. For this purpose the diagram is divided as indicated in Fig. 282, so that the mechanical work for the respective periods of admission, expansion, release, and compression can be computed. The heat received at the beginning and discharged at the end of each of these periods is compared with the mechanical

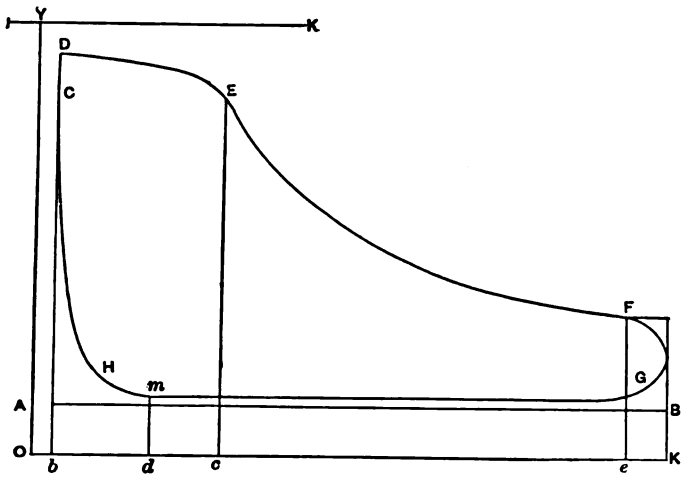

FIG. 282.—DIAGRAM FROM A GREENE ENGINE. CYLINDER, 26 INCHES IN DIAMETER BY 36 INCHES STROKE. BOILER-PRESSURE, 80 REVOLUTIONS PER MINUTE. SCALE, 50.

work expressed in heat-units done during that period. From this comparison the amount of heat interchanged, plus or minus, is computed for each period. It is to be noted that work done on the forward stroke is positive and that on the back stroke negative.

427. Directions for Engine-testing by Hirn's Analysis.

Directions.—1. Make a complete engine-test with a constant load, weigh the condensing water, and measure its temperature before and after condensing the steam. Obtain the quality of the entering steam either in the steam-pipe or steam-chest; if convenient, make calorimetric determinations of the quality of

the steam in the exhaust, which may be used as a check on the results, but which is necessary in case the exhaust steam is not condensed.

2. Calibrate all the instruments used, and correct all observations where required.

3. From the average quantities on the log, corrected as shown by the calibration, fill out form I, of data and results. The steam and condensing water used per revolution to be divided between the forward and backward strokes of the piston in proportion to the M. E. P. of these respective strokes, as shown on the log.

4. Draw on each diagram as explained lines corresponding to zero volume and to zero pressure, and divide the diagrams as shown in Fig. 226 into sections, by drawing lines to points of admission *W*, cut-off *cn*, release *Oe*, and compression *od*.

Measure for each diagram the percentages of cut-off, release, and compression, calling the original length of the diagram without clearance 100 per cent.

5. Measure the absolute pressure from each card and enter the averages in blank form No II, using subscripts as follows: 0, admission ; 1, cut-off ; 2, release ; 3, compression ; *c*, clearance.

Take from a steam-table the heat of liquid, internal latent heat, total latent heat, total heat, and specific volume, corresponding to each of the above pressures.

6. Compute the volumes in cubic feet for clearance, total volumes, including clearance, at admission, cut-off, release, and compression, and place the average results in the proper columns.

7. Compute the area corresponding to each period into which the diagram is divided and find the mean pressure for that period. Also find the work done in each period, expressed in foot-pounds and also in B. T. U. (It is to be noted that the work done during the return stroke is negative.) Enter the average of these results in the proper place, noting the use of the subscripts *a*, *b*, *c*, and *d*.

8. Calculate the heat-losses as indicated on Form III, which is an account of the heat used during 100 strokes of the engine.

The weight of steam, M, in pounds is 100 times the amount used for one stroke as given on Form I. The weight of steam in clearance is to be calculated for admission, pressure, and volume, and with x equal 1.00. M_0, to be calculated in the same manner. Calculate from known weights and temperatures the heat exhausted from the engine in the condensed steam K' and in the condensing water K.

Calculate by the formulæ, as explained, the heat supplied the engine, and the sensible and internal heat, at each event in the stroke of the engine.

9. Calculate the cylinder-loss at admission as the difference between that supplied added to that already in the clearance, and that remaining at cut-off added to that used in work. If the heat is flowing from the metal, the sign will be negative, otherwise positive.

10. Perform the same operation for each period of the engine; the difference between the heat at the beginning of each period and that at the end, taking into account the work done, is the loss.

11. Take the algebraic sum of these losses and of the heat equivalent of the external work, and if no error has been made in the calculations, this sum, which is the total transformation, will equal the difference between the heat supplied and that exhausted. That is, using the symbols of the analysis, $D = D.'$ It is also evident that this quantity is the loss by radiation.

The importance of this check on the accuracy of the computations should not be overlooked. If no errors of computation are made, in each case the value of D will equal that of D'.

12. Make the remaining calculations as on Form IV; these give the quality which the steam must have at various portions of the stroke to correspond with the foregoing calculations. The quality is calculated from the volume remaining in the cylinder. Compute the various efficiencies.

Note that the heat lost during admission is in some respects a measure of the initial cylinder-condensation.

The following forms are given partially filled out with the results of a test made by application of Hirn's analysis.

428. Forms for Hirn's Analysis.

MECHANICAL LABORATORY, SIBLEY COLLEGE, CORNELL UNIVERSITY.

Test of engine built by..... ....., *N. Y.*, ...189..

LOG OF TEST.

Number.	Time.	Revolutions.		Gauge-readings.						Temperatures.										Weights.				Head.		Crank.			Brake.		
		Continuous Counter.	Speed-indicator.	Pounds.			Inches Hg.			External Air.	Engine-room.	Condensed Steam.	Feed-water.	Injection-water.	Discharge-water.	Calorimeter.				Condensed Steam.	Feed-water.	Injection-water.		M. E. P.	I. H. P.	M. E. P.	I. H. P.	I. H. P. Total.	Load.	D. H. P.	Scale of Spring.
				Boiler.	Steam-pipe.	Steam-chest.	Exhaust.	Condenser.	Barometer.							Steam-pipe.	Steam-chest.	Cylinder.	Exhaust.												

Clearance, head, lbs. water	Diam. piston-rod, inches.....	Kind of engine.....	*Test made by*
" crank, " "	Diam. crank-pin, inches.... ...	Piston area, sq. inch.....	....
Brake-arm.....	Length crank-pin	Steam-port area, sq. inch.....	....
Diam cylinder, inches.....	Diam. wrist-pin, inches.....	Exhaust-port area, sq. inch.....	.....
Length stroke	Travel of valve, inches.....	Diam. fly-wheel, inches.....	.....
	Lap of valve, inches....		

FORM NO. I.

APPLICATION OF HIRN'S ANALYSIS TO SIMPLE CONDENSING ENGINE.

DATA AND RESULTS.

Test of steam-engine made by ..... at Cornell University.

Kind of engine, slide-valve throttling.	Diameter cylinder....	6.06 inches.	
Length stroke..... 8 inches.	Diameter piston-rod..	$1\frac{1}{16}$	"
Volume cylinder.....crank end, 0.12921 cu. ft.; head end,		0.13354	cu. ft.
Volume clearance, cubic foot, head.....		0.01744	
Clearance in per cent of stroke.....		13.06	
Volume clearance, cubic foot, crank.....		0.01616	
Clearance in per cent of stroke.....		12.51	
Boiler-pressure by gauge..... 69.4.	Barometer.....	29.276	
Boiler pressure absolute, pounds.....		83.7	
Boiling temperature, atmospheric pressure, deg. F.....		210.7	
Revolutions per hour.....		11898	
Steam used during run, pounds.....		716.424	
Quality of steam in steam-pipe.....		0.99	
Quality of steam in steam-chest.....		0.9941	
Quality of steam in compression.....		1.001	
Quality of steam in exhaust.....		0.9021	
Weight of condensed steam per hour.....		259.92	
Pounds of wet steam* per stroke.....head, 0.0109707; crank,		0.0109383	
Temperatures condensed steam.....		103.47	deg. F.
Temperatures condensing water.....cold, 42.758 deg. F.; hot,		92.219	"
Pounds of condensing water, per hour.....		5044.878	
" " " " " revolution.....		0.42429	
" " " " " stroke-head.....		0.212016	
" " " " " crank		0.212274	

SYMBOLS.

To denote different portions of the stroke, the following subscripts are used: Admission, *a*; expansion, *b*; exhaust, *c*; compression, *d*.

To denote different events of the stroke, the following sub-numbers are used: Cut-off, 1; release, 2; compression, beginning of, 3; admission, beginning of, 0; in exhaust, 5. Quality of steam denoted by *X*.

Cut-off, crank end, per cent of stroke...	20.544.	Release, crank end..	93.958
Cut-off, head end, per cent of stroke....	18.963.	Release, head end...	94.971
Compression, crank end, per cent of stroke.....			52.341
Compression, head end, per cent of stroke.....			39.770
Pounds of steam per I. H. P.....			39.351
Pounds of steam per brake H. P.....			55.314
I. H. P. Head..... 3.3152.	Crank..... 3.3054.	Total.....	6.6206
Brake horse-power.....			4.71

* Wet steam is the steam uncorrected for calorimetric determinations.

FORM NO. II.

ABSOLUTE PRESSURES FROM INDICATOR-DIAGRAMS AND CORRESPONDING PROPERTIES OF SATURATED STEAM.

		Cut-off.	Release.	Beginning		Symbols.	
				Compression.	Of Admission.	Rankine.	Clausius.
Subscripts used		1	2	3	0		
Absolute pressure	Head					P	t
	Crank						
Heat of liquid	Head					S	q
	Crank						
Internal latent heat	Head					I	ρ
	Crank						
Latent-heat evaporation	Head					L	r
	Crank						
Total heat	Head					H	λ
	Crank						
Vol. 1 lb. cu. ft.	Head					C	v
	Crank						
Volumes symbols		$V_0 + V_1$	$V_0 + V_2$	$V_0 + V_3$	$V_0 + V_0$	V_0	
Volumes head, cu. ft.							
Volumes crank, cu. ft.							

MEAN PRESSURES AND HEAT EQUIVALENTS OF EXTERNAL WORK.

	Subscripts.	Head End.			Crank End.		
		Mean Pressures.	External Work.		Mean Pressures.	External Work.	
			Foot-lbs.	B. T. U.		Foot-lbs.	B. T. U.
Symbols		MP	W	AW*	MP	W	AW*
Admission	a						
Expansion	b						
Exhaust	c						
Compression	d						
Total							

* $A = \frac{1}{778}$. V_0 = volume in clearance-spaces.

FORM NO. III.

HIRN'S ANALYSIS—HEAT-TRANSFER PER 100 STROKES.

Quantities.	Symbols.	Formulæ.	Head.	Crank.
Steam from boiler, lbs	M		1.097	1.093
Steam at admission, lbs	M_0	$100(V_c+V_0)+v_0$	0.164	0.144
Steam, total, lbs	$M+M_0$		1.261	1.237
Heat of condensed steam	K'	Mq_5	78.062	78.181
Condensing water, lbs	G		21.201	21.227
Heat given to condensing water	K	$G(q_k-q_1)$	1048.652	1049.928
Heat supplied to engine	Q	$M(xr+q)$	1285.274	1281.478
Sensible heat at admission	H_0	M_0q_0	37.998	33.457
Internal heat at admission	H_0'	$100\frac{V_c+V_0}{v_0}\rho_0$	143.550	125.579
Sensible heat at cut off	H_1	$(M+M_0)q_1$	338.348	328.216
Internal heat at cut-off	H_1'	$100\frac{V_c+V_1}{v_1}\rho_1$	545.502	528.169
Sensible heat at release	H_2	$(M+M_0)q_2$	254.408	254.030
Internal heat at release	H_2'	$100\frac{V_c+V_2}{v_2}\rho_2$	701.118	706.586
Sensible heat, beginning of compression	H_3	M_0q_3	21.392	19.082
Internal heat, beginning of compression	H_3'	$100\frac{V_c+V_3}{v_3}\rho_3$	113.914	103.631
Cylinder-loss during admission	Q_a	$Q+H_0+H_0'-H_1-H_1'-AW_a$	551.135	549.824
" " " expansion	Q_b	$H_1+H_1'-H_2-H_2'-AW_b$	−135.861	−163.178
" " " exhaust	Q_c	$H_2+H_2'-H_3-H_3'-(K+K')-AW_c$	−303.364	−285.382
" " " compression	Q_d	$H_3+H_3'-H_0-H_0'-AW_d$	− 29.727	− 18.603
Heat discharged, and work	B	$K+K'+AW$	1203.093	1198.818
Loss	D	$Q-B$	82.181	82.659
Loss	D'	$Q_a+Q_b+Q_c+Q_d$	82.181	82.659

Special symbols, V_c = volume clearance, t = measured temperature. Subscript 5 applies to exhaust, i to injection, k to discharge, g to air-pump discharge.

FORM NO. IV.

HIRN'S ANALYSIS—SUMMARY AND RESULTS.

Quantities.	Symbols.	Formulæ.		Head.	Crank.
Quality of steam entering	x	Per calorimeter,	per cent.	99.41	99.41
Quality of steam at cut-off	x_1	$100\frac{V_0+V_1}{(M+M_0)C_1}$	"	52.34	51.50
Quality of steam at release	x_2	$100\frac{V_0+V_2}{(M+M_0)C_2}$	"	65.34	65.26
Quality of steam at compression	x_3	$100\frac{V_0+V_3}{M_0C_3}$	"	71.75	77.16
Quality of steam at admission	x_0	Per calorimeter,	"	102.05	102.05
Quality of steam in exhaust	x_5	$\left(\frac{K+K'}{M}-q_5\right)+r_5$	"	90.214	90.195
Heat lost, admission	a	Q_a+Q	"	42.881	42.905
Heat restored, expansion	b	Q_b+Q	"	10.571	12.733
Heat rejected, exhaust	c	Q_c+Q	"	23.603	22.270
Heat lost, compression	d	Q_d+Q	"	− 2.313	− 1.452
Heat utilized, work	w	$\frac{W}{778}+\zeta$	"	5.518	5.518
Heat lost, radiation	R	$D+Q$	"	6.394	6.450
Ratio, radiation to work		$R+w$		1.1588	1.1689
Ratio, cylinder-condensation to work		$a+w$		7.7711	7.7757
Thermodynamic efficiency	E	$(t-t_3)+(461+t)$	per cent.	19.921	19.031
Actual efficiency	E_1'	$\frac{W}{778}+Q$	"	5.518	5.518
Efficiency compared with ideal	E	E_1+E	"	27.67	28.49

In the above test, a calorimeter was arranged on the engine to obtain quality of the steam in compression. A slight correction for the steam used, 0.0049 lb., is made.

429. Hirn's Analysis applied to Non-condensing Engines.—In this case: 1. Determine the weight of water used by weighing that supplied the boiler, taking precautions to prevent loss of steam between the engine and the boiler by leaks. Apply the calorimeter and ascertain the quality near the engine. The heat in one pound of steam above 32° Fahr. will be represented by the formula $xr + q$, as previously explained. This quantity multiplied by the weight, M, is the heat supplied. M may be taken for 1 or for 100 strokes, as convenient.

2. Determine the quality of the exhaust-steam by attaching a calorimeter in the exhaust-pipe, close to the engine. The heat discharged by one pound will be, as explained in Article 311, $x_e r_e + q_e$; in which the symbols denote quantities taken at exhaust-steam pressure. This quantity multiplied by the weight, M, is the heat discharged, and is equal to $K + K'$ in the Form III, page 543.

3. With these exceptions, the method is exactly as explained for the condensing engine, and the same forms are to be used.

In obtaining the quality of the exhaust-steam, a separating calorimeter (see Art. 337) through which the steam is drawn by suction, can be used with success.

430. Application of Hirn's Analysis to Compound Engines.—Compound engines are usually run condensing, and the special directions are for that case; but in case the engine is run non-condensing the method of Article 429 can be applied.

Directions.—With calorimeter between the cylinders:

1. Attach a calorimeter in the exhaust of the high-pressure cylinder, and determine the heat exhausted from the high-pressure cylinder as explained for non-condensing engines.

Treat the high pressure cylinder as a simple non-condensing engine, as explained in Article 429.

2. Determine by the calorimeter between the cylinders the heat supplied to the low-pressure engine. This quantity will be the same as that exhausted from the high-pressure, corrected for steam used by the calorimeter and for radiation from the connecting pipes.

3. Fill out the forms for each cylinder as a separate engine.

By using two calorimeters between cylinders the same method can be applied to a triple-expansion engine.

In case the pressure of the steam between the cylinders is less than atmospheric a calorimeter can be used by attaching a special air-pump and condenser, so as to secure a flow of steam through the calorimeter.

Without calorimeter between the cylinders:

1. Determine the weight of steam, M, for both cylinders from the condensed steam of the low-pressure cylinder. This will give the quantity M.

2. For the high-pressure cylinder compute the quantities as in Form III, omitting those terms containing K and K', the heat exhausted.

3. Determine K and K' as follows: $K + K'$ is evidently equal to the heat supplied the high-pressure engine, less the heat transformed into work, expressed in B. T. U., less the loss by radiation. The total loss by radiation in the whole engine is equal to the heat supplied the first cylinder, less the work done by all the cylinders, less the heat discharged from the last one. As an approximation, divide this total radiation-loss equally between the cylinders, assuming that the lower temperature of the low-pressure cylinder will offset its increased size. This will give us in Form III the value of $D = Q - B$. Compute B, substitute this value in the equation $B = K + K' + AW$. Compute $K + K'$ and complete the analysis for the high-pressure cylinder.

4. *For the low-pressure cylinder*, determine the entering heat as that discharged from the high-pressure cylinder, $K+K'$. plus the assumed radiation as given above.

Make a complete analysis for each cylinder as explained for a simple engine.

431. Hirn's Analysis applied to a Triple-expansion Engine.—When the quality of the steam between the cylinders can be determined, treat the engine as three separate engines as explained.

When the quality cannot be determined, treat the case as explained for a compound engine, as follows:

1. Find the entire loss as equal to the difference between that supplied to the first cylinder and that discharged from the last, increased by the work done in the whole system reduced to thermal units. Divide this by the number of cylinders to find the assumed radiation-loss from each.

2. Take the cylinders in series, and assume the discharged heat to equal the heat supplied, diminished by that transformed into external work, and make a separate analysis for each cylinder as explained for a simple engine.

The following is an application of Hirn's analysis to a triple-expansion engine by Prof. C. H. Peabody at the Massachusetts Institute of Technology.

The main dimensions of the engine are as follows:

Diameter of the high-pressure cylinder	9	inches.
Diameter of the intermediate cylinder	16	"
Diameter of the low-pressure cylinder	24	"
Diameter of the piston-rods	$2\frac{3}{16}$	"
Stroke	30	"

Clearance in per cent of the piston displacements:

High-pressure cylinder,	head end,	8.83;	crank end,	9.76
Intermediate	"	"	10.4	"	10.9
Low-pressure	"	"	11.25	"	8.84

The following table gives the data and results of a test with Hirn's analysis, made by the graduating class:

Duration of test, minutes	60
Total number of revolutions	5299
Revolutions per minute	88.3
Steam-consumption during test, pounds:	
Passing through cylinders	1193
Condensation in high-pressure jacket	57
" in first receiver jacket	61
" in intermediate jacket	85
" in second receiver jacket	53
" in low-pressure jacket	89
Total	1538

Condensing water for test, pounds..	22847
Priming, by calorimeter	0.013
Temperatures, Fahrenheit:	
Condensed steam	95.4
Condensing water, cold	41.9
Condensing water, hot	96.1
Pressure of the atmosphere, by the barometer, lbs. per sq. in.	14.8
Boiler-pressure, lbs. per sq. inch, absolute	155.3
Vacuum in condenser, inches of mercury	25.0
Events of the stroke:	
High-pressure cylinder—	
Cut-off, crank end	0.192
" head end	0.215
Release, both ends	1.00
Compression, crank end	0.05
" head end	0.05
Intermediate cylinder—	
Cut-off, both ends	0.29
Release, both ends	1.00
Compression, crank end	0.03
" head end	0.04
Low-pressure cylinder—	
Cut-off, crank end	0.38
" head end	0.39
Release, both ends	1.00
Quality of the steam in the cylinder—(at admission and at compression the steam was assumed to be dry and saturated:)	
High-pressure cylinder—	
At cut-off x_1	0.785
At release x_2	0.899
Intermediate cylinder—	
At cut-off x_1	0.899
At release x_2	0.994
Low-pressure cylinder—	
At cut-off x_1	0.978
At release x_2	superheated
Interchanges of heat between the steam and the walls of the cylinders, in B. T. U. Quantities affected by the positive sign are absorbed by the cylinder-walls; quantities affected by the negative sign are yielded by the walls.	
High-pressure cylinder—	
Brought in by steam Q	132.92
During admission Q_a	23.54
During expansion Q_b	− 18.69
During exhaust Q_c	− 8.36

During compression	Q_d	0.45
Supplied by jacket	Q_j	4.56
Lost by radiation	Q_e	1.50
First intermediate receiver—		
Supplied by jacket	Q_{jR}	4.92
Lost by radiation	Q_{eR}	0.58
Intermediate cylinder—		
Brought in by steam	Q'	131.89
During admission	Q_a'	13.62
During expansion	Q_b'	− 18.65
During exhaust	Q_c'	0.22
During compression	Q_d'	0.44
Supplied by jacket	Q_j'	6.82
Lost by radiation	Q_e'	2.45
Second intermediate receiver—		
Supplied by jacket	Q_{jR}	4.20
Lost by radiation	Q_{eR}	1.20
Low-pressure cylinder—		
Brought in by steam	Q''	132.14
During admission	Q_a''	5.85
During expansion	Q_b''	− 9.51
During exhaust	Q_c''	2.53
During compression	Q_d''	0.00
Supplied by jacket	Q''	7.08
Lost by radiation	Q''	4.34
Total loss by radiation:		
By preliminary test	ΣQ_e	10.07
By equation (49)		11.68

Absolute pressures in the cylinder, lbs. per sq. inch:

High-pressure cylinder—	
Cut-off, crank end	145.9
" head end	143.2
Release, crank end	41.3
" head end	41.5
Compression, crank end	43.7
" head end	48.7
Admission, crank end	64.5
" head end	75.3
Intermediate cylinder—	
Cut-off, crank end	37.2
" head end	35.0
Release, crank end	13.6
" head end	13.4
Compression, crank end	16.3
" head end	17.9

Admission, crank end	20.4
" head end	21.1
Low-pressure cylinder—	
Cut-off, crank end	12.1
" head end	12.0
Release, crank end	5.6
" head end	5.4
Compression and admission, crank end	3.7
" " " head end	4.3
Heat equivalents of external work, B. T. U., from areas on indicator-diagram to line of absolute vacuum :	
High-pressure cylinder—	
During admission, AW_a, crank end	5.71
" " head end	6.61
During expansion, AW_b, crank end	10.65
" " head end	10.81
During exhaust, AW_c, crank end	7.73
" " head end	8.08
During compression, AW_d, crank end	0.43
" " head end	0.62
Intermediate cylinder—	
During admission, AW_a, crank end	7.53
" " head end	7.43
During expansion, AW_b, crank end	9.54
" " head end	9.22
During exhaust, AW_c, crank end	9.27
" " head end	9.27
During compression, AW_d, crank end	0.39
" " head end	0.60
Low-pressure cylinder—	
During admission, AW_a, crank end	7.75
" " head end	7.99
During expansion, AW_b, crank end	6.83
" " head end	6.87
During exhaust, AW_c, crank end	5.08
" " head end	5.08
During compression, AW_d, crank end	0.00
" " head end	0.00
Power and economy :	
Heat equivalents of work per stroke—	
High-pressure cylinder AW	8.44
Intermediate cylinder AW'	7.12
Low-pressure cylinder AW''	9.64
Total	25.20
Total heat furnished by jackets	27.58

Distribution of work:	
High-pressure cylinder	1.00
Intermediate cylinder	0.84
Low-pressure cylinder	1.14
Horse-power	104.9
Steam per horse-power per hour	14.65
B. T. U. per horse-power per minute	258.3

THE SATURATION-CURVE.—By drawing on the indicator-diagram a curve corresponding to the volume of an equal weight of dry and saturated steam, the quality may be determined at any point during the expansion, and by calculations similar to those used in Hirn's analysis the heat existing in the cylinder may be computed. The method of drawing the saturation-curve may be explained as follows: first, determine the weight of steam per stroke by the usual methods of engine-testing. Second, find the corresponding volume for dry and saturated steam by multiplying the weight of steam per stroke by the volume corresponding to one pound as obtained from the steam tables, for several points in the expansion-curve. Third, draw in connection with the indicator-diagram a clearance-line and a vacuum-line in accordance with the scale of volume and pressure, from which initial measurements can be taken.

Fourth, determine the volume occupied by the steam caught in the clearance-space when compressed to the steam-line; for this operation we can assume with little error that the steam is dry and saturated at the end of compression, and that it remains in this condition during compression. Thus in Fig. 283 the compression-line is produced from a_1 to a by drawing a saturation-curve, which is drawn by taking ordinates proportional to pressures and abscissa proportional to volumes as given in the steam table, those for a_1 being known. This curve may be considered the curve of volume for dry and saturated compression. Very little error would be made by assuming the compression-curve hyperbolic. By producing the saturation-curve aa_1 downward the quality during compression could be determined.

Fifth, lay off from the compression-curve for saturated steam horizontal distance corresponding to the volume of dry and saturated steam at different pressures, obtained as explained above. Through the various points so determined draw a curve; such a curve will be the saturation-curve.

To obtain the quality of the steam at any point on the expansion-lines divide the horizontal distance measured from the clearance-line to the expansion-line by the corresponding distance to the saturation-curve. Thus in Fig. 283 the

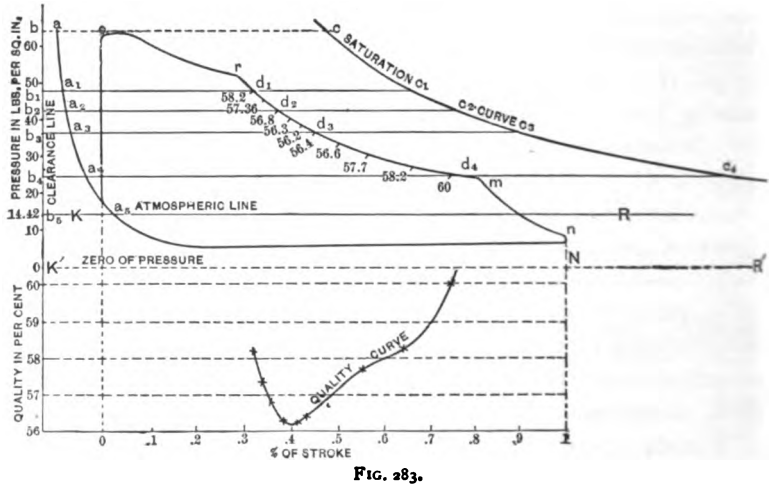

FIG. 283.

quality at d_1 is equal to b_1d_1/b_1c_1—that is, the quality is the ratio of the actual volume of the steam to that of dry and saturated steam, and this is true provided the volume occupied by the condensed steam, which is exceedingly small in every case, is neglected. The quality at different points during expansion can be determined in a similar manner, and a curve showing the variation of quality may be laid off as shown in the lower portion of Fig. 283.

The comparative quality during compression can be obtained in a similar manner by comparing the volume during compression with that of an equal volume of dry and saturated steam.

The error involved in the above construction is the same as that made in Hirn's analysis, since in both cases the quality of the steam at end of compression is assumed and the

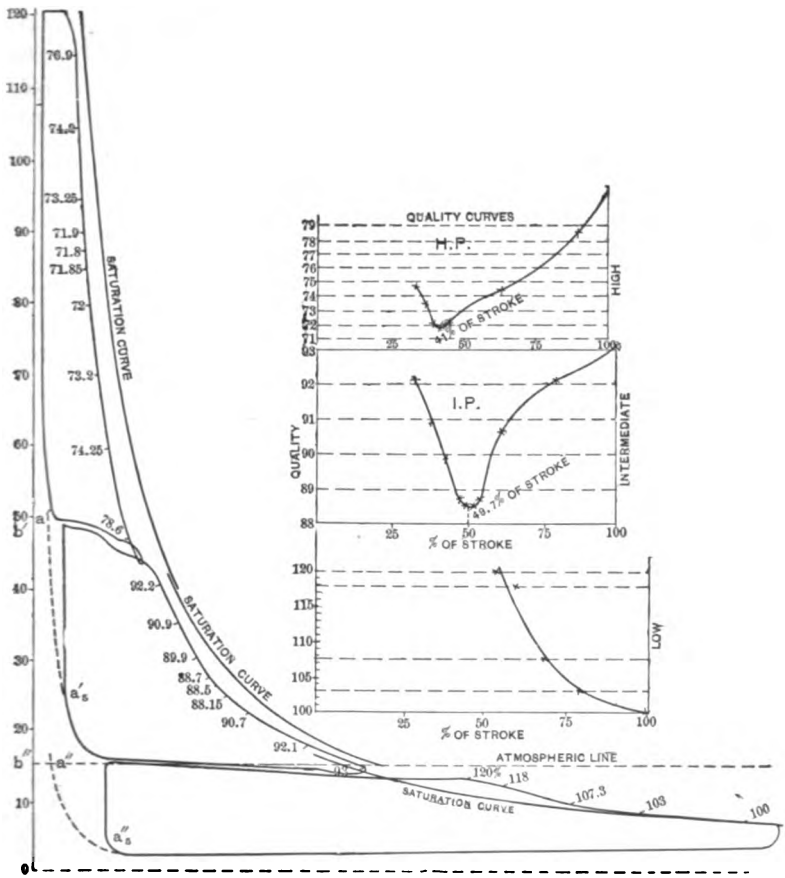

FIG. 284.

volume of water entrained is neglected; such errors are, however, exceedingly small. Fig. 284 shows the saturation-curves of a combined diagram reduced from cards taken on the Sibley College experimental engine. It will be noticed that the saturation-curve is not continuous for the three

cylinders, which is due to the fact that clearance and compression of the different cylinders is not uniform.

To calculate the interchanges of heat in an engine during expansion and compression, first determine the quality as explained. Also determine the weight of steam used per stroke, the weight of and the rise in temperature of the condensing water. Using the same symbols as for Him's analysis, the heat supplied to the engine will be

$$Q = M(xr + q);$$

that discharged from the engine is equal to the heat of the condensed steam above 32° F., Mq_g plus that absorbed by the injection-water $G(q_k - q)$ that utilized in work AW. The

HEAT-INTERCHANGES CALCULATED BY SATURATION-CURVE.

QUANTITY PER 100 STROKES.

Obtain by measurement:		*Heat transformed into work:*
Weight of steam, in pounds	M	Admission (a) $AW_a = a$
Weight of injection water, in pounds	G	Expansion (b) $AW_b = b$
Temperature of condensed steam above 32° F.	q_g	Exhaust (c) $AW_c = c$
Rise in temperature injection-water	$q_k - q_i$	Compression (d) $AW_d = d$
Wt. of steam in clearance	M_0	*Heat-interchanges:*
Quality steam entering	x	Admission $H - (H_1 + a)$
Quality cut-off, release, and compression	x_1, x_2, and x_3	Expansion $H_1 - (H_2 + b)$
Quality end of compres'n, %	100	Exhaust $H_2 - (K + K_1 + c + H_3)$
Obtain by computation:		Compression $H_3 - (d + H_4)$
Total heat $M(xr + q)$	H	
Heat at cut-off, $(M + M_0)(x_1\rho_1 + q_1)$	H_1	Total loss equals algebraic sum of heat-interchanges, and this affords a check on the numerical work.
Heat at release, $(M + M_0)(x_2\rho_2 + q_2)$	H_2	
Heat at compression, $M_0(x_3\rho_3 + q_3)$	H_3	
Heat discharged, condensed steam	$Mq_g = K$	
Heat discharged, injection water	$M(q_k - q_i) = K_1$	
Heat loss, total	$H - (K + K_1)$	

difference between that received and that discharged is the total loss due to radiation.

The heat remaining in the steam at any point can be obtained by multiplying the weight of steam used per stroke, increased by that caught in the clearance, by the sum of sensible heat and product of internal latent heat and quality. Thus

$$H = (M + M_0)(q + x\rho).$$

The work done while the piston is passing from point to point under consideration may be obtained by integrating the diagram and reducing to heat-units by dividing by 778. The table on the foregoing page indicates the operations to be performed in calculating the heat-interchanges by the saturation-curve.

NOTE.—The method of determining the heat interchanges in a steam engine which have been given apply directly to the use of saturated or wet steam only. The same general method is applicable when superheated steam is used, but for that case the relation of volume and weights to heat values will be essentially different.

CHAPTER XIX.

METHODS OF TESTING PUMPING ENGINES AND STEAM LOCOMOTIVES.

432. Special Methods of Engine-testing.—Engines employed for certain specific purposes, as for pumping water or for locomotive service, are constructed with peculiar features rendered necessary by the work to be accomplished. In such cases it is frequently difficult to arrange to make all the measurements in the manner prescribed for the tests of the general type of the steam-engine; further, it is often of importance that the amount and character of the work accomplished be taken into consideration. To secure results that can safely be compared, it is essential that certain methods of testing be adopted and that the results be expressed in the same form and referred to the same standards.

433. Method of Testing Steam Pumping-engines.—A standard method of testing steam pumping-engines has been adopted by the American Society of Mechanical Engineers (see Vol. XI. of the Transactions). The method is as follows:

(1) TEST OF FEED-WATER TEMPERATURES.

The plant is subjected to a preliminary run, under the conditions determined upon for the test, for a period of three hours, or such a time as is necessary to find the temperature of the feed-water (or the several temperatures, if there is more than one supply) for use in the calculation of the duty. During this test observations of the temperature are made every fifteen minutes. Frequent observations are also made of the speed, length of stroke, indication of water-pressure gauges, and other

instruments, so as to have a record of the general conditions under which this test is made.

Directions for obtaining Feed-water Temperatures.—When the feed-water is all supplied by one feeding instrument, the temperature to be found is that of the water in the feed-pipe near the point where it enters the boiler. If the water is fed by an injector this temperature is to be corrected for the heat added to the water by the steam, and for this purpose the temperature of the water entering and of that leaving the injector are both observed. If the water does not pass through a heater on its way to the boiler (that is, that form of heater which depends upon the rejected heat of the engine, such as that contained in the exhaust-steam either of the main cylinders or of the auxiliary pumps), it is sufficient, for practical purposes, to take the temperature of the water at the source of supply, whether the feeding instrument is a pump or an injector.

When there are two independent sources of feed-water supply, one the main supply from the hot-well, or from some other source, and the other an auxiliary supply derived from the water condensed in the jackets of the main engine and in the live-steam reheater, if one be used, they are to be treated independently. The remarks already made apply to the first, or main, supply. The temperature of the auxiliary supply, if carried by an independent pipe either direct to the boiler or to the main feed-pipe near the boiler, is to be taken at convenient points in the independent pipe.

When a separator is used in the main steam-pipe, arranged so as to discharge the entrained water back into the boiler by gravity, no account need be made of the temperature of the water thus returned. Should it discharge either into the atmosphere to waste, to the hot-well, or to the jacket-tank, its temperature is to be determined at the point where the water leaves the separator before its pressure is reduced.

When a separator is used, and it drains by gravity into the jacket-tank, this tank being subjected to boiler-pressure, the

temperature of the separator-water and jacket-water are each to be taken before their entrance to the tank.

Should there be any other independent supply of water, the temperature of that is also to be taken on this preliminary test.

Directions for Measurement of Feed-water.—As soon as the feed-water temperatures have been obtained the engine is stopped, and the necessary apparatus arranged for determining the weight of the feed-water consumed, or of the various supplies of feed-water if there is more than one.

In order that the main supply of feed-water may be measured, it will generally be found desirable to draw it from the cold-water service-main. The best form of apparatus for weighing the water consists of two tanks, one of which rests upon a platform-scale supported by staging, while the other is placed underneath. The water is drawn from the service-main into the upper tank, where it is weighed, and it is then emptied into the lower tank. The lower tank serves as a reservoir, and to this the suction-pipe of the feeding apparatus is connected.

The jacket-water may be measured by using a pair of small barrels, one being filled while the other is being weighed and emptied. This water, after being measured, may be thrown away, the loss being made up by the main feed-pump. To prevent evaporation from the water, and consequent loss on account of its highly heated condition, each barrel should be partially filled with cold water previous to using it for collecting the jacket-water, and the weight of this water treated as tare.

When the jacket-water drains back by gravity to the boiler, waste of live steam during the weighing should be prevented by providing a small vertical chamber, and conducting the water into this receptacle before its escape. A glass water-gauge is attached, so as to show the height of water inside the chamber, and this serves as a guide in regulating the discharge-valve.

When the jacket-water is returned to the boiler by means of a pump, the discharge-valve should be throttled during the test, so that the pump may work against its usual pressure,

that is, the boiler-pressure as nearly as may be, a gauge being attached to the discharge-pipe for this purpose.

When a separator is used and the entrained water discharges either to waste, to the hot-well, or to the jacket-tank, the weight of this water is to be determined, the water being drawn into barrels in the manner pointed out for measuring the jacket-water. Except in the case where the separator discharges into the jacket-tank, the entrained water thus found is treated, in the calculations, in the same manner as moisture shown by the calorimeter-test. When it discharges into the jacket-tank, its weight is simply subtracted from the total weight of water fed, and allowance made for heat of this water lost by radiation between separator and tank.

When the jackets are drained by a trap, and the condensed water goes either to waste or to the hot-well, the determination of the quantity used is not necessary to the main object of the duty trial, because the main feed-pump in such cases supplies all the feed-water. For the sake of having complete data, however, it is desirable that this water be measured, whatever the use to which it is applied.

Should live steam be used for reheating the steam in the intermediate receiver, it is desirable to separate this from the jacket-steam, if it drain into the same tank, and measure it independently. This, likewise, is not essential to the main object of the duty trial, though useful for purposes of information.

The remarks as to the manner of preventing losses of live steam and of evaporation, in the measurement of jacket-water, apply to the measurement of any other hot water under pressure, which may be used for feed-water.

Should there be any other independent supply of water to the boiler, besides those named, its quantity is to be determined independently, apparatus for all these measurements being set up during the interval between the preliminary run and the main trial, when the plant is idle.

(2) THE MAIN DUTY-TRIAL.

The duty-trial is here assumed to apply to a complete plant, embracing a test of the performance of the boiler as well as that of the engine. The test of the two will go on simultaneously after both are started, but the boiler-test will begin a short time in advance of the commencement of the engine-test, and continue a short time after the engine-test is finished. The mode of procedure is as follows:

The plant having been worked for a suitable time under normal conditions, the fire is burned down to a low point and the engine brought to rest. The fire remaining on the grate is then quickly hauled, the furnace cleaned, and the refuse withdrawn from the ash-pit. The boiler-test is now started, and this test is made in accordance with the rules for a standard method recommended by the Committee on Boiler Tests of the American Society of Mechanical Engineers. This method, briefly described, consists in starting the test with a new fire lighted with wood, the boiler having previously been heated to its normal working degree; operating the boiler in accordance with the conditions determined upon; weighing coal, ashes, and feed-water; observing the draught, temperatures of feed-water and escaping gases, and such other data as may be incidentally desired; determining the quantity of moisture in the coal and in the steam; and at the close of the test hauling the fire, and deducting from the weight of coal fired whatever unburned coal is contained in the refuse withdrawn from the furnace, the quantity of water in the boiler and the steam-pressure being the same as at the time of lighting the fire at the beginning of the test.

Previous to the close of the test it is desirable that the fire should be burned down to a low point, so that the unburned coal withdrawn may be in a nearly consumed state. The temperature of the feed-water is observed at the point where the water leaves the engine heater, if this be used, or at the point where it enters the flue-heater, if that apparatus be employed. Where an injector is used for supplying the water, a deduction

is to be made in either case for the increased temperature of the water derived from the steam which it consumes.

As soon after the beginning of the boiler-test as practicable the engine is started and preparations are made for the beginning of the engine-test. The formal commencement of this test is delayed till the plant is again in normal working condition, which should not be over one hour after the time of lighting the fire. When the time for commencement arrives the feed-water is momentarily shut off, and the water in the lower tank is brought to a mark. Observations are then made of the number of tanks of water thus far supplied, the height of water in the gauge-glass of the boiler, the indication of the counter on the engine, and the time of day; after which the supply of feed-water is renewed, and the regular observations of the test, including the measurement of the auxiliary supplies of feed-water, are commenced. The engine-test is to continue at least ten hours. At its expiration the feed-pump is again momentarily stopped, care having been taken to have the water slightly higher than at the start, and the water in the lower tank is brought to the mark. When the water in the gauge-glass has settled to the point which it occupied at the beginning, the time of day and the indication of the counter are observed, together with the number of tanks of water thus far supplied, and the engine-test is held to be finished. The engine continues to run after this time till the fire reaches a condition for hauling, and completing the boiler-test. It is then stopped, and the final observations relating to the boiler-test are taken.

The observations to be made and data obtained for the purposes of the engine-test, or duty-trial proper, embrace the weight of feed-water supplied by the main feeding apparatus, that of the water drained from the jackets, and any other water which is ordinarily supplied to the boiler, determined in the manner pointed out. They also embrace the number of hours' duration, and number of single strokes of the pump during the test; and, in direct-acting engines, the length of the stroke, together with the indications of the gauges attached to the

force and suction mains, and indicator-diagrams from the steam-cylinders. It is desirable that pump-diagrams also be obtained.

Observations of the length of stroke, in the case of direct-acting engines, should be made every five minutes; observations of the water-pressure gauges every fifteen minutes: observations of the remaining instruments—such as steam-gauge, vacuum-gauge, thermometer in pump-well, thermometer in feed-pipe; thermometer showing temperature of engine-room, boiler-room, and outside air; thermometer in flue, thermometer in steam-pipe, if the boiler has steam-heating surface, barometer, and other instruments which may be used—every half-hour. Indicator-diagrams should be taken every half-hour.

When the duty-trial embraces simply a test of the engine apart from the boiler, the course of procedure will be the same as that described, excepting that the fires will not be hauled, and the special observations relating to the performance of the boiler will not be taken.

Directions regarding Arrangement and Use of Instruments, and other Provisions for the Test.—The gauge attached to the force-main is liable to a considerable amount of fluctuation unless the gauge-cock is nearly closed. The practice of choking the cock is objectionable. The difficulty may be satisfactorily overcome, and a nearly steady indication secured, with cock wide open, if a small reservoir having an air-chamber is interposed between the gauge and the force-main. By means of a gauge-glass on the side of the chamber and an air-valve, the average water-level may be adjusted to the height of the centre of the gauge, and correction for this element of variation is avoided. If not thus adjusted, the reading is to be referred to the level shown, whatever this may be.

To determine the length of stroke in the case of direct-acting engines, a scale should be securely fastened to the frame which connects the steam and water cylinders, in a position parallel to the piston-rod, and a pointer attached to the rod so as to move back and forth over the graduations on the scale. The marks on the scale, which the pointer reaches at the two

ends of the stroke, are thus readily observed, and the distance moved over computed. If the length of the stroke can be determined by the use of some form of registering apparatus, such a method of measurement is preferred. The personal errors in observing the exact scale-marks, which are liable to creep in, may thereby be avoided.

The form of calorimeter to be used for testing the quality of the steam is left to the decision of the person who conducts the trial. It is preferred that some form of continuous calorimeter be used, which acts directly on the moisture tested. If either the separating calorimeter* or the wire-drawing† instrument be employed, the steam which it discharges is to be measured either by numerous short trials, made by condensing it in a barrel of water previously weighed, thereby obtaining the rate by which it is discharged, or by passing it through a surface-condenser of some simple construction, and measuring the whole quantity consumed. When neither of these instruments is at hand, and dependence must be placed upon the barrel calorimeter, scales should be used which are sensitive to a change in weight of a small fraction of a pound, and thermometers which may be read to tenths of a degree. The pipe which supplies the calorimeter should be thoroughly warmed and drained just previous to each test. In making the calculations the specific heat of the material of the barrel or tank should be taken into account, whether this be of metal or of wood.

If the steam is superheated, or if the boiler is provided with steam-heating surface, the temperature of the steam is to be taken by means of a high-grade thermometer resting in a cup holding oil or mercury, which is screwed into the steam-pipe so as to be surrounded by the current of steam. The temperature of the feed-water is preferably taken by means of a cup screwed into the feed-pipe in the same manner.

Indicator-pipes and connections used for the water-cylin-

* Vol. VII, p. 178, 1886, Transactions A. S. M. E. See page 430 of this volume.

† Vol. XI, 1890, p. 193, Transactions A. S. M. E. See page 419 of this volume.

ders should be of ample size, and, so far as possible, free from bends. Three-quarter-inch pipes are preferred, and the indicators should be attached one at each end of the cylinder. It should be remembered that indicator-springs which are correct under steam heat are erroneous when used for cold water. When such springs are used, the actual scale should be determined, if calculations are made of the indicated work done in the water-cylinders. The scale of steam-springs should be determined by a comparison, under steam-pressure, with an accurate steam-gauge at the time of the trial, and that of water-springs by cold dead-weight test.

The accuracy of all the gauges should be carefully verified by comparison with a reliable mercury-column. Similar verification should be made of the thermometers, and if no standard is at hand, they should be tested in boiling water and melting ice.

To avoid errors in conducting the test, due to leakage of stop-valves either on the steam-pipes, feed-water pipes, or blow-off pipes, all these pipes not concerned in the operation of the plant under test should be disconnected.

(3) LEAKAGE-TEST OF PUMP.

As soon as practicable after the completion of the main trial (or at some time immediately preceding the trial) the engine is brought to rest, and the rate determined at which leakage takes place through the plunger and valves of the pump, when these are subjected to the full pressure of the force-main.

The leakage of the plunger is most satisfactorily determined by making the test with the cylinder-head removed. A wide board or plank may be temporarily bolted to the lower part of the end of the cylinder, so as to hold back the water in the manner of a dam, and an opening made in the temporary head thus provided for the reception of an overflow pipe. The plunger is blocked at some intermediate point in the stroke (or, if this position is not practicable, at the end of the stroke), and

the water from the force-main is admitted at full pressure behind it. The leakage escapes through the overflow pipe, and it is collected in barrels and measured.

Should the escape of the water into the engine-room be objectionable, a spout may be constructed to carry it out of the building. Where the leakage is too great to be readily measured in barrels, or where other objections arise, resort may be had to weir or orifice measurement, the weir or orifice taking the place of the overflow-pipe in the wooden head. The apparatus may be constructed, if desired, in a somewhat rude manner, and yet be sufficiently accurate for practical requirements. The test should be made, if possible, with the plunger in various positions.

In the case of a pump so planned that it is difficult to remove the cylinder-head, it may be desirable to take the leakage from one of the openings which are provided for the inspection of the suction-valves, the head being allowed to remain in place.

It is here assumed that there is a practical absence of valve-leakage, a condition of things which ought to be attained in all well-constructed pumps. Examination for such leakage should be made first of all, and if it occurs and it is found to be due to disordered valves, it should be remedied before making the plunger-test. Leakage of the discharge-valves will be shown by water passing down into the empty cylinder at either end when they are under pressure. Leakage of the suction-valves will be shown by the disappearance of water which covers them.

If valve-leakage is found which cannot be remedied, the quantity of water thus lost should also be tested. The determination of the quantity which leaks through the suction-valves, where there is no gate in the suction-pipe, must be made by indirect means. One method is to measure the amount of water required to maintain a certain pressure in the pump-cylinder when this is introduced through a pipe temporarily erected, no water being allowed to enter through the discharge-valves of the pump.

The exact methods to be followed in any particular case, in determining leakage, must be left to the judgment and ingenuity of the person conducting the test.

(4) TABLE OF DATA AND RESULTS.

In order that uniformity may be secured, it is suggested that the data and results, worked out in accordance with the standard method, be tabulated in the manner indicated in the following scheme:

DUTY-TRIAL OF ENGINE.

Dimensions.

1. Number of steam-cylinders.....
2. Diameter of steam-cylinders..... ins.
3. Diameter of piston-rods of steam-cylinders..... ins.
4. Nominal stroke of steam-pistons..... ft.
5. Number of water-plungers.....
6. Diameter of plungers..... ins.
7. Diameter of piston-rods of water-cylinders..... ins.
8. Nominal stroke of plungers..... ft.
9. Net area of plungers..... sq. ins.
10. Net area of steam-pistons..... sq. ins.
11. Average length of stroke of steam-pistons during trial..... ft.
12. Average length of stroke of plungers during trial..... ft.

(Give also complete description of plant.)

Temperatures.

13. Temperature of water in pump-well..... degs.
14. Temperature of water supplied to boiler by main feed-pump. degs.
15. Temperature of water supplied to boiler from various other sources..... degs.

Feed-water.

16. Weight of water supplied to boiler by main feed-pump..... lbs.
17. Weight of water supplied to boiler from various other sources. lbs.
18. Total weight of feed-water supplied from all sources..... lbs.

Pressures.

19. Boiler-pressure indicated by gauge..... lbs.
20. Pressure indicated by gauge on force-main..... lbs.
21. Vacuum indicated by gauge on suction-main..... ins.
22. Pressure corresponding to vacuum given in preceding line..... lbs.
23. Vertical distance between the centres of the two gauges..... ins.
24. Pressure equivalent to distance between the two gauges..... lbs.

Miscellaneous Data.

25. Duration of trial..... hrs.
26. Total number of single strokes during trial.....
27. Percentage of moisture in steam supplied to engine, or number of degrees of superheating..... % or deg.
28. Total leakage of pump during trial, determined from results of leakage-test..... lbs.
29. Mean effective pressure, measured from diagrams taken from steam-cylinders..... M.E.P.

Principal Results.

30. Duty..... ft.-lbs.
31. Percentage of leakage..... %
32. Capacity..... gals.
33. Percentage of total frictions..... %

*Additional Results.**

34. Number of double strokes of steam-piston per minute.....
35. Indicated horse-power developed by the various steam-cylinders..... I. H. P.
36. Feed-water consumed by the plant per hour..... lbs.
37. Feed-water consumed by the plant per indicated horse-power per hour, corrected for moisture in steam..... lbs.
38. Number of heat-units consumed per indicated horse-power per hour..... B. T. U.
39. Number of heat-units consumed per indicated horse-power per minute..... B. T. U.
40. Steam accounted for by indicator at cut-off and release in the various steam-cylinders..... lbs.
41. Proportion which steam accounted for by indicator bears to the feed-water consumption.....

Sample Diagrams taken from Steam-cylinders.

[Also, if possible, full measurements of the diagrams, embracing pressures at the initial point, cut-off, release, and compression; also back-pressure, and the proportions of the stroke completed at the various points noted.]

42. Number of double strokes of pump per minute.....
43. Mean effective pressure, measured from pump-diagrams..... M. E.P.
44. Indicated horse-power exerted in pump-cylinders..... I. H. P.

* These are not necessary to the main object, but it is desirable to give them.

Sample Diagrams taken from Pump-cylinders.

.....
.....
.....

DATA AND RESULTS OF BOILER-TEST.

[IN ACCORDANCE WITH THE SCHEME RECOMMENDED BY THE BOILER-TEST COMMITTEE OF THE SOCIETY.]

1. Date of trial.....
2. Duration of trial..... hrs.

Dimensions and Proportions.

3. Grate-surface wide long Area..... sq. ft.
4. Water-heating surface..... sq. ft.
5. Superheating-surface..... sq. ft.
6. Ratio of water-heating surface to grate-surface.....
(Give also complete description of boilers.)

Average Pressures.

7. Steam-pressure in boiler by gauge..... lbs.
8. Atmospheric pressure by barometer..... lbs.
9. Force of draught in inches of water..... ins.

Average Temperatures.

10. Of steam..... degs.
11. Of escaping gases..... degs.
12. Of feed-water.....

Fuel.

13. Total amount of coal consumed* ..... lbs.
14. Moisture in coal ..... %
15. Dry coal consumed..... lbs.
16. Total refuse (dry)..... lbs.
17. Total combustible (dry weight of coal, item 15, less refuse, item 16)..... lbs.
18. Dry coal consumed per hour..... lbs.

Results of Calorimetric Test.

19. Quality of steam, dry steam being taken as unity.....
20. Percentage of moisture in steam..... %
21. Number of degrees superheated..... degs.

---

* Including equivalent of wood used in lighting fire. One pound of wood equals 0.4 of a pound of coal, not including unburned coal withdrawn from fire at end of test.

Water.

22. Total weight of water pumped into boiler and apparently evaporated * ..... lbs.
23. Water actually evaporated corrected for quality of steam..... lbs.
24. Equivalent water evaporated into dry steam from and at 212° F.†..... lbs.
25. Equivalent total heat derived from fuel, in British thermal units..... B.T.U.
26. Equivalent water evaporated into dry steam from and at 212° F. per hour..... lbs.

Economic Evaporation.

27. Water actually evaporated per pound of dry coal from actual pressure and temperature..... lbs.
28. Equivalent water evaporated per pound of dry coal from and at 212° F..... lbs.
29. Equivalent water evaporated per pound of combustible from and at 212° F..... lbs.
30. Number of pounds of coal required to supply one million British thermal units..... lbs.

Rate of Combustion.

31. Dry coal actually burned per square foot of grate-surface per hour..... lbs.

Rate of Evaporation.

32. Water evaporated from and at 212° F. per square foot of heating-surface per hour..... lbs.

To determine the percentage of surface moisture in the coal a sample of the coal should be dried for a period of twenty-four hours, being subjected to a temperature of not more than 212°. The quantity of unconsumed coal contained in the refuse withdrawn from the furnace and ash-pit at the end of the test may be found by sifting either the whole of the refuse, or

---

* Corrected for inequality of water-level and of steam-pressure at beginning and end of test.

† Factor of evaporation $= \frac{H - h}{965.7}$, H and h being, respectively, the total heat-units in steam of the average observed pressure corrected for quality, and in water of the average observed temperature of feed.

a sample of the same, in a screen having $\frac{3}{8}$-inch meshes. This, deducted from the weight of dry coal fired, gives the weight of dry coal consumed, for line 15.

Results of actual trial, as illustrated by the committee, would be computed by the use of the following formulæ:

1. Duty $= \dfrac{\text{Foot-pounds of work done}}{\text{Total number of heat-units consumed}} \times 1{,}000{,}000$

$$= \frac{A(P \pm p + s) \times L \times N}{H} \times 1{,}000{,}000 \text{ (foot-pounds)}.$$

2. Percentage of leakage $= \dfrac{C \times 144}{A \times L \times N} \times 100$ (per cent).

3. Capacity = number of gallons of water discharged in 24 hours

$$= \frac{A \times L \times N \times 7.4805 \times 24}{D \times 144}$$

$$= \frac{A \times L \times N \times 1.24675}{D} \text{ (gallons)}.$$

4. Percentage of total friction

$$= \left(\frac{I.H.P. - \dfrac{A(P \pm p + s) \times L \times N}{D \times 60 \times 33{,}000}}{I.H.P.} \right) \times 100$$

$$= \left[1 - \frac{A(P \pm p \times s) \times L \times N}{A_1 \times M.E.P. \times L_1 \times N_1} \right] \times 100 \text{ (per cent)};$$

or, in the usual case, where the length of the stroke and number of strokes of the plunger are the same as that of the steam-piston, this last formula becomes—

$$\text{Percentage of total frictions} = \left[1 - \frac{A(P \pm p + s)}{A_1 \times M.E.P.} \right] \times 100 \text{ (p.c.)}$$

In these formulæ the letters refer to the following quantities:

A = Area, in square inches, of pump-plunger or piston, corrected for area of piston-rod. (When one rod is used at one end only, the correction is one half the area of the rod. If there is more than one rod, the correction is multiplied accordingly.)

P = Pressure, in pounds per square inch, indicated by the gauge on the force-main.

p = Pressure, in pounds per square inch, corresponding to indication of the vacuum-gauge on suction-main (or pressure-gauge, if the suction-pipe is under a head). The indication of the vacuum-gauge, in inches of mercury, may be converted into pounds by dividing it by 2.035.

s = Pressure, in pounds per square inch, corresponding to distance between the centres of the two gauges. The computation for this pressure is made by multiplying the distance, expressed in feet, by the weight of one cubic foot of water at the temperature of the pump-well, and dividing the product by 144; or by multiplying the distance in feet by the weights of one cubic foot of water at the various temperatures.

L = Average length of stroke of pump-plunger, in feet.

N = Total number of single strokes of pump-plunger made during the trial.

A_1 = Area of steam-cylinder, in square inches, corrected for area of piston-rod. The quantity $A_1 \times M.E.P.$, in an engine having more than one cylinder, is the sum of the various quantities relating to the respective cylinders.

L_1 = Average length of stroke of steam-piston, in feet.

N_1 = Total number of single strokes of steam-piston during trial.

$M.E.P.$ = Average mean effective pressure, in pounds per

square inch, measured from the indicator-diagrams taken from the steam cylinder.

I.H.P. = Indicated horse-power developed by the steam-cylinder.

C = Total number of cubic feet of water which leaked by the pump-plunger during the trial, estimated from the results of the leakage-test.

D = Duration of trial, in hours.

H = Total number of heat-units [B. T. U.] consumed by engine = weight of water supplied to boiler by main feed-pump × total heat of steam of boiler-pressure reckoned from temperature of main feed-water + weight of water supplied by jacket-pump × total heat of steam of boiler-pressure reckoned from temperature of jacket-water + weight of any other water supplied × total heat of steam reckoned from its temperature of supply. The total heat of the steam is corrected for the moisture or superheat which the steam may contain. For moisture, the correction is subtracted, and is found by multiplying the latent heat of the steam by the percentage of moisture, and dividing the product by 100. For superheat, the correction is added, and is found by multiplying the number of degrees of superheating (i.e., the excess of the temperature of the steam above the normal temperature of saturated steam) by 0.48. No allowance is made for heat added to the feed-water, which is derived from any source, except the engine or some accessory of the engine. Heat added to the water by the use of a flue-heater at the boiler is not to be deducted. Should heat be abstracted from the flue by means of a steam-reheater connected with the intermediate receiver of the engine, this heat must be included in the total quantity supplied by the boiler.

The following example is one of those given by the com-

mittee to illustrate the method of computation. The figures are not obtained from tests actually made, but they correspond in round numbers with those which were so obtained:

EXAMPLE.—*Compound Fly-wheel Engine.*—High-pressure cylinder jacketed with live steam from the boiler. Low-pressure cylinder jacketed with steam from the intermediate receiver, the condensed water from which is returned to the boiler by means of a pump operated by the engine. Main steam-pipe fitted with a separator. The intermediate receiver provided with a reheater supplied with boiler-steam. Water drained from high-pressure jacket, separator, and reheater collected in a closed tank under boiler-pressure, and from this point fed to the boiler direct by an independent steam-pump. Jet-condenser used operated by an independent air-pump. Main supply of feed-water drawn from hot-well and fed to the boiler by donkey steam-pump, which discharges through a feed-water heater. All the steam-pumps, together with the independent air-pump, exhaust through the heater to the atmosphere.

DIMENSIONS.

Diameter of high-pressure steam-cylinder (one)	20 in.
Diameter of low-pressure steam-cylinder (one)	40 "
Diameter of plunger (one)	20 "
Diameter of each piston-rod	4 "
Stroke of steam-pistons and pump-plunger	3 ft.

GENERAL DATA.

1. Duration of trial (*D*)	10	hrs.
2. Boiler-pressure indicated by gauge (barometric pressure, 14.7 lbs.)	120	lbs.
3. Temperature of water in pump-well	60	degs
4. Temperature of water supplied to boiler by main feed-pump, leaving heater	215	"
5. Temperature of water supplied by low-pressure jacket-pump	225	"
6. Temperature of water supplied by high-pressure jacket, separator, and reheater-pump, that derived from separator being 340°, and that from jackets 290°	300	"

7. Weight of water supplied to boiler by main feed-pump	18,863	lbs.
8. Weight of water supplied by low-pressure jacket-pump	615	"
9. Weight of water supplied by pump for high-pressure jacket, separator, and reheater-tank, of which 210 lbs. is derived from separator	1,025	"
10. Total weight of feed-water supplied from all sources	20,503	"
11. Percentage of moisture in steam after leaving separator	1.5%	

DATA RELATING TO WORK OF PUMP.

12. Area of plunger minus ½ area of piston-rod (A)	307.88	sq. in.
13. Average length of stroke (L and L_s)	3	ft.
14. Total number of single strokes during trial (N and N_s)	24,000	
15. Pressure by gauge on force-main (P)	95	lbs.
16. Vacuum by gauge on suction-main	7.5	in.
17. Pressure corresponding to vacuum given in preceding line (p)	3.69	lbs.
18. Vertical distance between centres of two gauges	10	ft.
19. Pressure equivalent to distance between two gauges (s)	4.33	lbs.
20. Total leakage of pump during trial, determined from results of leakage-test (C)	3,078	cu. ft.
21. Number of double strokes of pump per minute	20	
22. Mean effective pressure measured from pump-diagrams	105	lbs.
23. Indicated horse-power exerted in pump-cylinders	117.55	I.H.P.

DATA RELATING TO WORK OF STEAM-CYLINDERS.

24. Area of high-pressure piston minus ½ area of rod (A_{s1})	307.88	sq. in.
25. Area of low-pressure piston minus ½ area of rod (A_{s2})	1,250.36	" "
26. Average length of stroke, each	3	ft.
27. Mean effective pressure measured from high-pressure diagrams ($M.E.P._1$)	59.25	lbs.
28. Mean effective pressure measured from low-pressure diagrams ($M.E.P._2$)	13.60	"
29. Number of double strokes per minute (line 21)	20	
30. Indicated horse-power developed by H.-P. cylinder	66.33	I.H.P.
31. Indicated horse-power developed by L.-P. cylinder	61.82	"
32. Indicated horse-power developed by both cylinders	128.15	"
33. Feed-water consumed by plant per indicated horse-power per hour, corrected for separator-water and for moisture in steam	15.60	lbs.
34. Number of heat-units consumed per indicated horse-power per hour	15,652.1	B.T.U
35. Number of heat-units consumed per indicated horse-power per minute	260.9	"

TOTAL HEAT OF STEAM RECKONED FROM THE VARIOUS TEMPERATURES OF FEED-WATER, AND COMPUTATIONS BASED THEREON.

36. Total heat of 1 lb. of steam at 120 lbs. gauge-pressure, containing 1.5% of moisture, reckoned from 0° F.= 1220.6 − (1.5% of 866.7)..... 1,207.6 B.T.U.
37. Ditto, reckoned from 215° temperature of main feed-water = 1207.6 − 215.9..... 991.7 "
38. Ditto, reckoned from 225° temperature of low-pressure jacket-water = 1207.6 − 226.1..... 981.5 "
39. Ditto, reckoned from 290° temperature of high-pressure jacket and reheater water = 1207.6 − 292.3 =.. 915.3 "
40. Heat of separator-water reckoned from 340° = 353.9 − 343.8..... 10.1 "
41. Heat consumed by engine (H) = (18.863 × 991.7) + (615 × 981.5) + (815 × 915.3) + (210 × 10.1) =..... 20,058,150 "

RESULTS.

Substituting these quantities in the formulæ, we have:

1. Duty $= \dfrac{\overset{A}{307.88} \times (95 + \overset{P}{3.69} + \overset{p}{4.33}) \times \overset{s}{3} \times \overset{L}{24,000} \times \overset{N}{1,000,000}}{\underset{H}{20,058,150}}$

$= 113,853,044$ foot-pounds.

2. Percentage of leakage $= \dfrac{\overset{C}{3078} \times 144}{\underset{A}{307.88} \times \underset{L}{3} \times \underset{N}{24,000}} \times 100 = 2.0\%$.

3. Capacity $= \dfrac{\overset{A}{307.88} \times \overset{L}{3} \times \overset{N}{24,000} \times 1.24675}{\underset{D}{10}}$

$= 2,763,716$ gallons.

4. Percentage of total frictions

$$= \left(1 - \frac{\overset{A}{307.88} \times (95 + \overset{P}{3.69} + \overset{p}{4.33})}{\underset{A_{s1}}{(307.88} \times \underset{M.E.P._1}{59.25}) + (\underset{A_{s2}}{1250.36} \times \underset{M.E.P._2}{13.6})}\right) \times 100$$

$= 9.0\%$.

In the use of a system like the preceding, every precaution should be observed in the adoption of methods, as well as in taking observations. The water discharged by a pumping-engine, for example, should never be obtained by computation from the measured dimensions of the pump and the observed number of strokes, but should be measured directly. A weir is commonly arranged for this purpose. Where the delivery of the pump has been actually measured, and the pump thus standardized, its use as a meter is less liable to error, but it is best avoided whenever possible.

434. Standard Method of Testing Locomotives.— The following is a reprint of a report of a committee on standard methods of testing locomotives appointed by the American Society of Mechanical Engineers, and submitted at the San Francisco meeting in 1892:

Locomotive-testing is conducted under such unfavorable circumstances and surroundings that many of the exact methods employed in testing stationary engines or boilers cannot be used. It is desirable, therefore, that locomotive-tests be always made with a special train when possible, so that the same cars shall be used for the different trips, and the weight of train be uniform. The speed of the train can also be under control, and the tests not hampered by the rules governing a regularly scheduled train. Special and peculiar apparatus is employed by nearly every different experimenter as having some extra merit of convenience or accuracy, and we have endeavored to ascertain the best practical instruments and methods for the various measurements, and to illustrate or explain them.

When a dynamometer-car is not used:

As a final basis of comparison of locomotives, we recommend as a unit the number of thermal units used per indicated horse-power per hour. The object in view in testing a locomotive will determine the methods employed and the extent and kind of data necessary to obtain. Some tests are made to ascertain the economy of a particular kind of boiler or fire-

box; others, the value of employing compound cylinders; others, to ascertain the relative merits of certain coals for locomotive use.

As a practical and commercial unit the amount of coal consumed per ton-mile may be used.

For a coal-test we give a separate method and test blanks, Form D, for tabulating results.

For a unit of comparison of boiler-test we recommend the number of thermal units F. taken up every hour by the water and steam in the boiler.

For a measurement of the resistance overcome in hauling a train, a dynamometer-car is essential, and we give a method of operating a dynamometer-car and of recording results.

For a uniform method of recording results of indicator-tests, we recommend the blank Form A.

For tabulating general results, Form B is presented.

The waste from the injector should be ascertained by catching it in a vessel conveniently attached, or by starting the injector several times in the engine-house and catching the overflow in a tub.

The total weight of the water caught divided by the number of applications of the injector gives the average waste. The observer in the cab should keep a record of the number of times the injector is applied during the trips, and thus obtain data for estimating the total waste.

FUEL MEASUREMENTS.

The measurement of fuel in locomotive-tests is not difficult so far as a determination of the total amount shovelled into the fire is concerned. A weighed amount may be shovelled into the tank, and the amount remaining, after a given run, be weighed to determine the amount used, provided no water is used to wet down the coal. But it is next to impossible to determine the amount of coal used at any particular portion of a run when the coal is put in the tender in bulk. If coal is put in sacks containing 125 pounds each, with a small amount of weighed coal on the foot-plate, even with heavy firing it is

found quite possible for the fireman to cut open the bags, and dump the coal on the foot-plate as needed. In this way the rate of consumption on difficult portions of the run could readily be estimated. The use of water-meters and of coal in sacks obviates any need of weighing the tender, and thus removes one of the largest inaccuracies incident to the ordinary locomotive-tests. To determine the amount of coal used during the trip, it is only necessary to count the number of bags which have been emptied. However, the determination of the amount of fuel used during a run is not all that is necessary for a test. The measurement of the fire-line before and after a test is very essential and extremely difficult. If the run is a long one, then the errors in the determination of the fire-line may not be great; but for short runs there seems to be no way of measuring the difference between the heat-value of coal in the fire before the test and after with sufficient accuracy to give reliable data. In tests made on a heavy grade, one trip closely succeeding another, it is of course impracticable to drop the fire and measure the amount of fuel in the ashes remaining. Such measurements are unsatisfactory and inaccurate in any case, because it is not practicable to draw the fire without wetting it, as the ashes rise into the machinery, and they are too hot to handle. When one run succeeds another within a short space of time, some other method is necessary for measuring fuel used than by dumping the coal.

The test is commenced with a good fire in the furnace, and the height of coal estimated by two or more assistants engaged in the trial. At the end of the run the fire should be in the same condition as near as possible. No raw coal should be in the box and steam-pressure and pyrometer-pressure falling.

APPLICATION OF THE INDICATOR.

If the power of the engine is to be determined, the action of the valve-gear examined, or the coal and water used per unit of power in a unit of time, the indicator must be used.

This instrument should be attached to a three-way cock just at the outer edge of the steam-chest, in order that the connecting pipes (which should be ¼ inch in diameter) can go directly in a diagonal direction to holes tapped into the sides of the cylinder rather than into the heads (Fig. 285). By this arrangement the pipes are shorter than when they pass over

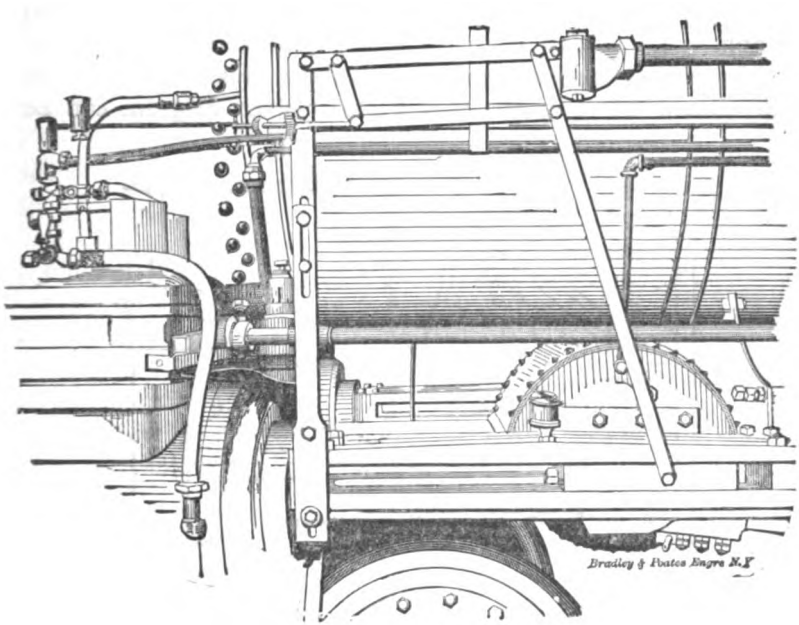

FIG. 285.—REDUCING-MOTION FOR LOCOMOTIVES.

the steam-chest into the heads, and have but short horizontal portions, thus facilitating the rapid draining of the pipes. Moreover, if a cylinder-head is knocked out the pipes are not dragged off, and the operator and indicator escape injury. The indicator should not be placed on horizontal pipes on a level with the axis of the cylinder-heads.

The indicator-pipes and three-way cock should be covered with a non-conductor, wrapped with canvas and painted. The indicator itself should be wrapped as high as the vent-holes in its steam-cylinder.

The indicator-gear may be a rigid, true pantograph motion, either fixed or adjustable in height (Fig. 286); or it may be a simple pendulum connected by link to the cross-head with a wooden quadrant 2 inches thick, and having a radius such as will make the indicator-card 3 inches long.

The cord of the indicator should be 8 or 10 inches long, and connected with a rod reaching forward from the pantograph.

In order to determine the steam-chest pressure, the indicator should be so piped that a steam-chest diagram can be

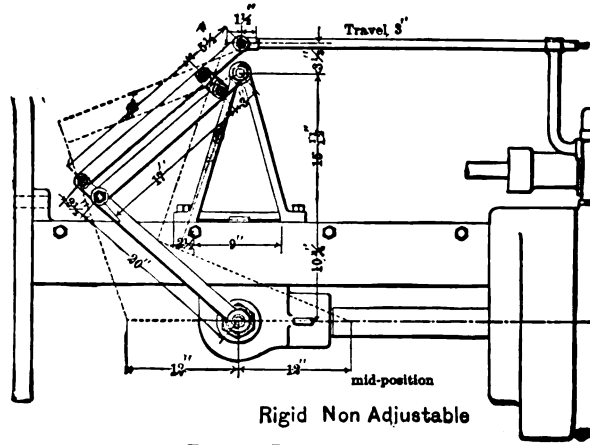

FIG. 286.—REDUCING-MOTION.

drawn by it. A steam-gauge on the chest is inaccurate and difficult to use.

Indicator-diagrams should be taken at equal distances instead of at equal time-intervals, in order to properly average the power. They should therefore be taken at mile-posts. The signal for taking diagrams should be given by the observer in the cab, who can pull a cord and ring a bell at the front of the engine, or blow the whistle.

For the safety of the operator at the indicator, it is recommended that the seat be on a piece of boiler-plate above the cylinder, and so arranged that a piston or cylinder-head can pass out without injuring him.

The person who takes the indicator-diagrams should be thoroughly sheltered by a temporary box containing a seat placed on the front end of the engine. Besides the usual indicator, there should be located near the observer a revolution-counter, which should be so arranged that after starting out the instrument will continue to record the revolutions for a period of exactly one minute, starting every time from zero and when the minute has elapsed the counter will stop. Such an instrument is already in existence for taking the continuous revolutions of dynamos and high-speed engines, and little or no difficulty would be experienced in obtaining an instrument capable of taking the revolutions from some reciprocating part of the machinery.

It is desirable also to have an electric connection between the indicator and the recording apparatus in the dynamometer-car, so that at the instant an indicator-diagram is taken, the fact may be registered on the dynamometer-diagram, see Article 181, page 246; and the cards should be numbered consecutively, and the record likewise.

Besides the person taking the indicator-diagrams, another person should be located in the cab of the engine, whose duty it should be to observe the point of cut-off given by the position of the reverse-lever, the position of the throttle-lever, and the boiler-pressure, all of which conditions should be recorded in a log-book for this purpose.

Besides recording on the dynamometer-diagram the fact that an indicator-card is being taken, a bell should be rung at the same time, so as to call the attention of the observers in the dynamometer-car to this fact.

LOCOMOTIVE-BOILER TESTS.—GENERAL DIRECTIONS.

First. The drawing of the boiler to accompany the report of tests should be particular in specifying the construction in detail, with reference to coal-burning and generating steam, such as heating surface, grate area and the distribution of openings through the grate, volume of fire-box, size and thickness of

flues, size of smoke-box, and the arrangement for draught, together with the thickness of walls between the heated gases and the water in the boiler; the weight of the boiler itself should be given, and the number of cubic feet of water-space and of steam-space in the boiler, the division between the two to be taken at the middle of the range of the gauges.

Second. Boilers for tests should be thoroughly cleaned on both sides of the heating surface, by a removal of the flues, before any test is commenced, and these surfaces should be kept clean by frequent washing during the test.

Exception.—When it is desired to make a comparison of boilers for the purpose of determining a difference between them as to incrustation, they should first be tested as above when clean, and then tested again without cleaning further than the ordinary washing out of the boilers after the lapse of some months' service. The results are to be reduced to evaporation per square foot of heating surface; both boilers using the same water during the period of testing.

Third. In case the measure of the capacity of the locomotive boiler for generating steam be desired, without reference to the engines forming the locomotive, this capacity should be measured by the number of British thermal units, taken up per hour by the water and steam in the boiler, which may be readily determined from the observed data of temperature of water fed to the boiler, pounds of water evaporated per hour, and steam-pressure under which this evaporation occurs. Use any good set of steam-tables, such as Peabody's or Porter's, found in Appendix, or in Richard's Steam-engine Indicator. In such cases it will be necessary to specify all the pertinent conditions under which such measure of the capacity of the boiler is made, so that in comparing with the capacity of another boiler all such conditions may be made as nearly alike as possible. It is, however, believed that a measure of the capacity of a locomotive boiler, without any reference to the capacity or efficiency and method of working of the engines on the locomotive which such boiler feeds, will not be of particular value in comparison of boilers, unless the conditions

under which the engines are worked with different boilers are identical, or nearly so.

Fourth. On account of the important influence which the temperature, and especially the moisture of the atmosphere, has upon the results obtained in a boiler-test, it is necessary to compare two or more boilers at the same place and at the same time, to get results which may be strictly comparable. The temperature of the air should then be noted for record.

Fifth. To properly determine the amount of water fed to a locomotive boiler in service on a locomotive during any test, it is necessary to use a good water-meter, which should have its maximum error determined by previous tests and given with the report.

Sixth. The coal used should be dry when weighed, and placed in sacks, each containing 100 or 125 lbs., care being taken to insure that all scales used are accurate. When an unusually large amount of coal is needed, a weighed quantity of coal may be placed in the front of the tender and used first, and the test finished with coal from the sacks. An analysis of the coal used should accompany the report, which should show the volatile matter, the fixed carbons, etc., the moisture, and the ash contained in the coal. The ashes should be dried if they contain any moisture, and carefully weighed and recorded after each test-run.

Seventh. The temperature of the smoke-box gases should be measured by a good pyrometer, located near enough to the flues in the smoke-box to get the average temperature of the gases after they have passed the heating surface, and before they are mixed with the exhaust steam. It is suggested that pyrometers, such as that offered by Schaeffer & Budenberg, or Weiskopf, are suitable for this purpose.

The location of pyrometers is shown in Fig. 288. These instruments cost about thirty-five dollars. They should register up to 1000° F. See Article 296.

Eighth. The degree of exhaustion in the smoke-box should be measured and recorded by means of a simple manometer-gauge. See Article 273.

Ninth. The quality of the steam furnished by the boiler to the engines should be determined by the most approved methods: See Chapter XIII.

Tenth. Samples of gases passing from the flues to the smoke-box should be analyzed and results reported. The

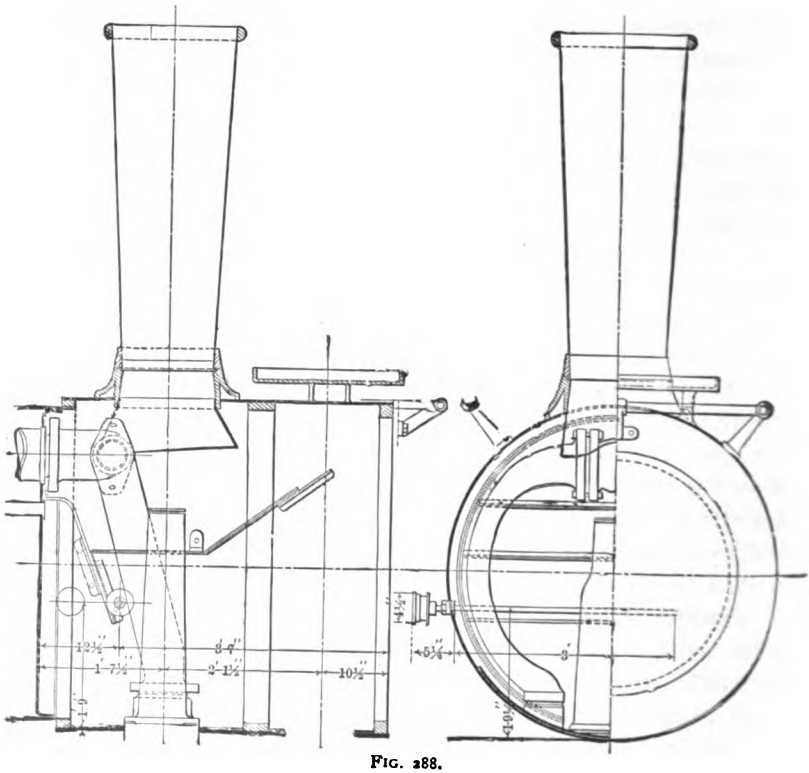

FIG. 288.

means of taking such gases so as to insure perfect samples is to be further considered, and definite means prescribed. See Article 358, page 473.

COAL TESTS.

Directions to be observed in Supervising and Conducting Coal-trials.—The locomotive selected should be in good condition,

and either a new engine or one that has lately undergone repairs.

The boiler should be washed before commencing the trial, the steam-gauge tested, the flues cleaned, and the exhaust nozzles cleaned and measured, which operations should be performed also whenever the kind of coal is changed. Instructions should be given to round-house foremen that no repairs or alterations of any sort be made to the engine without the approbation of the conductor of the trial. The same engineman and fireman should operate the engine throughout the trial, and the same methods of firing and running should be strictly adhered to. The run selected should be one in which the same distance is covered on each trip. The trains should be through trains and unbroken from end to end of the run, and the same number of cars and same lading should be provided each trip. The same speed should, if possible, be preserved on all trips.

The conductor of the trial should be familiar with correct methods of firing and running locomotives, and should insist that the fireman adhere to approved methods of firing, and that the same methods be preserved throughout the duration of the trial, so that all coals shall receive the same treatment. (See Chapter XIV, on Heating Values of Fuels, and Chapter XV, on Steam-boiler Trials.)

He should also see that the coal supplied at coaling points is of the proper kind, and should weigh the coal personally, and keep an accurate record of the following items:

The coal consumed.
The amount of ash.
The amount of cinders in smoke-box.
The water evaporated.
The number of cars in train.
The weight of cars as marked thereon.
The weight of lading.
The state of the weather.
The direction and estimated velocity of wind.
The temperature of the atmosphere.

The temperature of the feed-water.
The time on road.
The steam-pressure.
The exhaust-nozzles.

The conductor should enter the above observations in a log-book, together with notes of repairs to engine, and any other items that might be of import.

REPORT OF COAL-TRIALS.

In order that coal-trials may be similar and consequently comparative, the following data should be observed (see Article 343, page 443):

First.

Dates between which trials were conducted.
Class of locomotive.
Service in which trials were made, mentioning locality, etc.
Name of conductor of trial.

Second.

COAL A.

Kind of coal.
Name of mine and operator.
Location of mine.
Physical quality of coal (appearance).
Steaming quality of coal.
Kind of fire made.
Clinkers and ashes.
Cinders in smoke box.
Cleaning ash-pan and smoke-box.
Labor involved in firing.

COAL B.

Same as above.

GENERAL REMARKS.

Comparison of evaporation (pounds of water evaporated per pound of coal).

Comparison of coal consumed per 100 tons hauled one mile.
Value coal A, 100%.
Value coal B.
Comparative value.
Coal A is 100% more or less valuable than coal B.

A table of engine-performance and a table of general results of engine-performance for each coal must accompany the report. (See Form D, page 646.)

WATER-MEASUREMENTS.

It has been found during the last year or two that meters are reliable and accurate within less than one per cent for measuring the water used by a locomotive. (The experience of the author does not accord with this statement—see Article 214, page 284.) The meters should be specially made for the purpose and, if possible, free from any material that is injured by contact with hot water. They should be placed so as to be read from the cab.

In mounting these meters, all pipes should be thoroughly cleaned before they are put into position, and a sufficiently large strainer should be placed between the meter and the tank. A most essential feature is to have a good flap check-valve between the injector and the meter; otherwise the hot water may flow backward and ruin the rubber recording-disks in the meter. As a check upon the meter, however, other means of measuring the water should be employed. The most convenient method is to use a float attached to a wooden bar which slides upon a graduated rod, the lower end of which rests upon the bottom of the tank. This rod is graduated to show 1000 lbs., and subdivided to 250 lbs.

The method of graduating the rod is as follows: Fill the tank, place the bar and float in the proper position for reading, and mark the stationary rod zero at a level with the top of the float bar. Draw from the tank 1000 lbs., place the measuring device in position again and mark the rod, calling this mark 1. Again draw off 1000 lbs., mark the rod 2, and so continue until the water is all drawn. If the tank has a uni-

FORM D.

LOCOMOTIVE PERFORMANCE—COAL-TRIAL.

TRAINS NOS. o AND o. R. R. LOCOMOTIVE CLASS No..... BOILER-PRESSURE, ooo LBS.

Distance, ooo miles. *Between A and B.* *Fuel..... Coal.*

DATE.

Number of Round Trip.	Date.	Weather.	Temperature of Atmosphere. Average.	Temperature of Feed-water. Average.	Steam-pressure. Average.	Time on Road. H. M.	Running Time. H. M.	Average Running Speed in Miles per Hour.	Number of Cars in Train.	Lbs Coal consumed per Trip.	Lbs. Water evaporated per Trip.	Lbs. Water evaporated per lb. Coal.	Coal per Car per Mile.	Total Weight of Train in Tons.	Tons hauled One Mile.	Coal consumed per 100 Tons per Mile.	Remarks.
1																	
2																	
3																	
4																	
5																	
6																	
7																	
8																	
9																	
10																	
Totals.....																	
Averages...																	

form horizontal section, several thousand pounds can be drawn off at once and the rod subdivided accordingly.

In general the float is placed in the man-hole of the tank; but as this is not in the centre of gravity of the water-space, its readings are not quite correct if the two ends of the tank change their relative heights. This can be overcome by having a special small opening made at the centre of gravity of the tank, or as near it as possible, and using a small float.

Another but less convenient way is to place a glass tube, on each side of the tank opposite the centre of gravity of the water-space, and to graduate scales behind them by the same method as above described. The objections to this method are the inconvenience in reading the scales (especially at way stations where there is but little time), their liability to freezing in cold weather, and the possibility of injuring them at any time.

The float is always convenient and serviceable.

When locomotive boilers are being fired hard, the water rises above the normal level, and a measurement of water just after the injectors have been throwing comparatively cold water into the boiler is not an accurate one; the water shrinks and swells according as the firing is hard or as the locomotive is being worked. Hence measurements taken under these variable conditions are necessarily approximations. There is also a continuous movement of the water in the water-glass, and a mean of the oscillations is not quite satisfactory. Although the amount of water fed into the boiler can be determined exactly by the use of meters, yet the inaccuracies of the location of the water-line render water-measurements on short runs almost impracticable. The six-hour test for a stationary engine is considered satisfactory when successive tests will give the same results; but in locomotive work, unless the engine be kept quiet, as it would be when tested in a shed, a short test is of little or no value. It may be accepted that a determination of the water-line by the sound of the gauge-cocks is too uncertain to be admissible in locomotive-tests unless the run is a long one. In such cases the total amount of water used is so large

that any errors in estimating the water-level at the beginning or the end of the trip practically disappear.

A locomotive which is undergoing a test should have a water-glass on the boiler. Behind this should be a strip of wood graduated, and surrounding the glass and fastened to the wood should be a copper wire at the height at which the water should be left at the end of every trip. The tank-measurement should not be taken at the end of the trip until the water in the boiler is at the standard height. The temperature of the water should be taken as it enters the tank at every station where water is taken, and tank reading should be taken before and after each filling.

Leakage of Boiler.—To test for leakage, keep up the pressure to be carried, as nearly as possible, without blowing off, and note the fall of water in the water-glass in a given time, say four hours. Of course the injector must not be applied during this interval. The water-meter can then be used to determine the amount lost by leakage by reading the dial, applying the injector until the water reaches the original level, and then taking a second reading. The difference will be the amount of water lost. All boilers lose more or less from this cause, and if the test is to be a comparison between two different styles, the necessity for this information is obvious.

* * * * * * *

Before beginning a test, the pistons and the slide and throttle valves of the engine should be made tight. The point of cut-off for each notch of the quadrant should be ascertained, and the cut-off should be painted in white on the quadrant, or on boiler-jacket, with pointer or lever. All leaks about the engine should be stopped.

A graduated scale and index should be attached to the throttle-rod to indicate its opening.

A special steam-gauge with a long siphon should be used for the boiler-pressure and attached to the front of the cab at the left side, so that it will not become incorrect from overheating. Readings of the gauge, reverse quadrant, throttle-scale, and boiler-height-scale should be taken frequently, the first as often

as once in two and one-half, five, or ten minutes, depending on length and character of run, and all with each indicator-diagram, if the latter are being taken.

Just before beginning a trip the water in the boiler should be at the standard height and the tank reading taken in order to ascertain the amount of water used while running, or per indicated horse-power per hour.

Extraordinary efforts should be made to prevent blowing off before train time and while running. The number of times and the length of time safety-valve is blowing off should be recorded.

No water should be taken from the tank for any purpose except supplying the boiler, and the boiler should not be blown off during a test if it can be avoided. If it cannot be avoided, the water should be at the standard height before and after blowing.

DYNAMOMETER RECORDS.

The dynamometer for measuring the resistance of the train, exclusive of the engine and tender resistance, should be able to record the following data:

"A."—The pull upon the draw-bar.

"B."—The speed at which the train is running.

"C."—The location of any point along the line used for reference stations; and possibly

"D."—The wind-resistance.

"A."—THE PULL UPON THE DRAW BAR.

The force required to move the train or the pull upon the draw-bar should be registered upon a strip of paper travelling at a definite rate per mile of distance travelled over by the train. The scale upon which this diagram is drawn should be as large as is possible within reasonable limits; a scale of $\frac{1}{4}$ inch per 1000 lbs. pull is probably as suitable as any that can be devised, and the maximum registered pull need hardly exceed 28,000 or 30,000 lbs. The height of the diagram should be

measured from a base-line drawn upon the paper by a stationary pen so located that when no force is exerted upon the draw-bar the base-line should coincide with zero pull.

"B."—THE SPEED AT WHICH THE TRAIN IS RUNNING.

This record should, if possible, be obtained in two ways:

First.—By an accurate time-piece, preferably a chronometer furnished with an electric circuit-breaking device. It is of considerable importance that the time-piece should have its circuit-breaking device very carefully made, to produce exact intervals-of-time marks, because, when the matters of acceleration or retardation of speeds enter into the data required, it is important that the time-record should be correct. The question of length of intervals of time required is open to discussion. In most cases of ordinary work, five-second intervals, or twelve to the minute, are probably as satisfactory as can be decided upon; for very careful work it would probably be advisable to have an auxiliary apparatus, something like the Boyer speed-recorder.

Boyer Speed-recorder.—This instrument is constructed in such a manner that its accuracy and reliability are without question when it is properly mounted and cared for. It is not a delicate machine, and only needs ordinary attention. Its principle of operation is as follows: It consists of an oil-pump which works against a fixed resistance in the shape of an aperture through which the oil flows. The faster the pump runs, the greater is the pressure in the oil-cylinder. A piston in the oil-cylinder which moves against a spring rises in proportion to the increase of pressure. As the piston rises, a metallic pencil marks the movement on a roll of prepared paper, which moves in proportion to the longitudinal movement of the engine. In the cab is a dial which indicates at all times the speed of the engine with only a small error. The diagrams record all stops and make an accurate record of the rate of acceleration.

Second.—It would be well to have, in addition to the

apparatus just described, another one which produces a continuous curve upon the diagram paper, the ordinate of which, measured from a base-line, would give the speed in feet per second, or any other convenient measurement; this could be obtained by modification of the Boyer speed-indicator.

"C."—THE LOCATION OF ANY POINT ALONG THE LINE USED FOR REFERENCE STATIONS.

These location-marks are most easily produced by having, at various convenient parts of the car, electric press-buttons, and having a pen upon the dynamometer which will be deflected sidewise when the circuit is made or broken; this pen to be operated by an observer whose special duty it is to attend to this part of the work.

"D."—WIND-RESISTANCE.

Very little attention has so far been given to measurements of wind-resistance, or the relation it bears to the frictional resistance of journals and wheels, and few experiments on this subject are recorded. The subject is very complex, owing to the fact that it is generally supposed, and we think with good reason, that the train is so very largely surrounded by eddies of air, and that it will be very difficult to obtain any reliable data, especially when it is remembered that the clearances of a railroad are greatly circumscribed and reduced to a minimum, so that it will be impossible to put any apparatus which measures resistance of this kind far enough out from the car to get reliable data. The apparatus for measuring this resistance would probably be subdivided into three separate disks, one facing front and two facing toward the sides of the car, all three connected together to produce a single resultant curve drawn upon the diagram paper, and the scale upon which this is drawn could probably be best subdivided into ten points, as practised by the United States Government.

GENERAL.

It is of very great advantage to have more than one relative speed on the paper upon which the diagrams are recorded, and the length of the paper consumed per mile run should bear some convenient relation to the distance travelled over.

We would suggest that the rates of travel of paper per mile be such that 1 inch measured upon the diagrams shall represent 100 feet as the maximum, and that this distance be further subdivided so that $\frac{1}{2}$ inch shall represent 100 feet of track, and $\frac{1}{4}$ inch shall represent 100 feet of track. It is of course also necessary to have all of the registering pens located upon one line transverse to the direction of the movement of the paper, as in that way only can simultaneous data be recorded.

The staff required to work the dynamometer is as follows:

One chief, who has general supervision over the force, and whose duty it is to see that the records are properly obtained, and that all the location stations are properly marked upon the diagrams.

One outlook, whose duty it is solely to observe the location stations, and to locate them upon the diagrams by means of an electrically moved pen.

Besides this it is of considerable advantage to have a third person who is familiar with all the mechanism in the car, and who looks after the proper working of the mechanical parts of the apparatus, and assists the general observer.

TABLE OF ENGINE-PERFORMANCE.

The following forms are recommended for tabulating the results of a locomotive-test, and in order to make the test complete each test item should be entered. It is particularly important that the "equivalent evaporation from and at 212° per pound of coal" be entered, as it is only by this that evaporative comparisons can be made.

FORM A.

RESULTS OF INDICATOR-TESTS OF LOCOMOTIVE. No.....

Dimensions.....Railroad Co.

.....Bound. .....189..

CYLINDER-PERFORMANCE.

| | | |

FORM B.

LOCOMOTIVE-TESTS.—GENERAL RESULTS.

..... Railroad Co.

.....Tests of locomotive No....., between..... and.....

.....Bound. ....., 18...

Distance, ...miles. Train No...

Kind of coal..... Coal analysis..... Calorimetric value of coal.....

	Date				
	Left..... at				
	Arrived "				
1	Weather				
2	Mean temperature of atmosphere				
3	Direction of wind				
4	Velocity of wind, miles per hour				
5	Condition of rail				
6	Size of exhaust-nozzle, single or double				
7	Weight of train in tons of 2000 lbs., including locomotive, tender, passengers, and freight				
8	Weight of train in tons of 2000 lbs., exclud. the locomotive and tender				
9	Equivalent number of standard cars at ...tons each				
10	Maximum boiler-pressure by gauge				
11	Minimum " " "				
12	Average " " "				
13	Prevailing position of throttle				
14	" " " reverse-lever				
15	" points of cut-off				
16	Schedule time in motion				
17	Actual " " "				
18	Time made up in minutes				
19	Aggregate intermediate stops, minutes				
20	Time during which power was developed, or throttle open				
21	Average speed, miles per hour				
22	Maximum number of revolutions per minute				
23	" rate of speed, miles per hour				
24	Minimum number of seconds per mile				
25	Actual weight of coal used				
26	" " " wood "				
27	Average weight of coal burned per square foot of grate per hour				
28	Number of miles run per ton (2000 lbs.) of coal				
29	Number of pounds of coal used per mile				
30	Weight of ashes and unconsumed coal in fire-box and ash-pan				
31	" " unconsumed coal in fire-box and ash-pan				
32	" " cinders (sparks) in smoke-box				
33	" " combustible utilized				
34	Percentage of ashes and unconsumed coal in fire-box and ash-pan				
35	" " unconsumed coal in fire-box and ash-pan				
36	" " cinders in smoke-box				
37	" " combustible consumed				
38	Average temperature of feed-water				
39	Weight of water drawn from tender				
40	Waste of injector				
41	Weight of water evaporated (39–40)				
42	Actual evaporation per pound of total coal				
43	Equivalent evaporation from and at 212° per pound of coal				
44	" " " " " " " " " combustible				
45	Coal used per ton of train per 100 miles				
46	" " " car-mile				
47	Water used per ton of train per 100 miles				
48	" " " car mile				
49	" " " hour while developing power				
50	" " " " per square foot of heating surface				
51	" " " " " " " " grate "				
52	Maximum indicated horse-power developed				
53	Average " " "				
54	Total coal per indicated horse-power developed per hour				
55	Water evaporated per indicated horse-power per hour				
56	Dry steam used per I. H. P. per hour, per indicator-diagram				
57	Percentage of moisture in steam				
58	Average number of sq. ft. of heating surface per indicated horse-power.				
59	" " " indicated horse-power per sq. ft. of grate surface				
60	Average temperature in smoke-box while using steam				
61	Prevailing vacuum " " " " "				

STEAM CALORIMETERS.

There is little doubt that the throttling calorimeter will fulfil all requirements for testing the dryness of steam in locomotives. It cannot measure quantitatively more than about 5 per cent of moisture, but it appears probable that locomotive boilers develop steam which either contains a fraction of 1 per cent of moisture, or the priming is a sudden temporary action, causing water to mix with the steam to such an extent that no quantitative measurement of its amount is practicable. Under these circumstances all that is desired of a calorimeter is to indicate the temporary occurrence of this sudden excessive priming, and a throttling calorimeter has been shown by Mr. D. L. Barnes to be capable of doing this, provided the thermometer has its bulb in direct contact with the steam flowing through the calorimeter. Such an arrangement is shown in the accompanying figure, of which the following is a description abstracted from the *Railroad Gazette* of November 27, 1891 (see Article 330):

Calorimeter.—This instrument (see Fig. 289) consisted of two pieces of brass pipe, one inside of the other, leaving an air-space between the outer and the inner. The outer pipe was screwed into the dome and extended within the dome to the throttle. At this interior end the two pipes were joined together by a cap which had a perforation $\frac{3}{32}$ of an inch in diameter. On the outer end of the inner pipe was placed a globe-valve, and next to this and outside of it a tee in which was a stuffing-box and a thermometer, as shown in Fig. 289. Beyond this tee was another globe-valve and a short pipe of large diameter to carry the steam-jet away from the man in charge.

With this device the point of most rapid movement of the steam was located next to the throttle, and any water coming near it would immediately pass through the opening because of the high velocity. The thermometer-bulb was bared to the steam, and no cups were used. It was found possible to shut off the outer globe-valve and expose the thermometer to a full

boiler-pressure without blowing the thermometer from the stuffing-box. In this way it was determined that the thermometer recorded a steam-temperature which corresponded to the steam-gauge in the cab.

With this instrument priming was shown whenever the

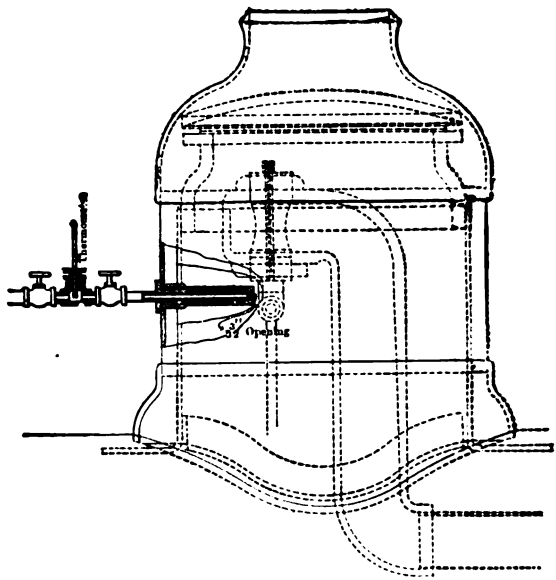

FIG. 289.—THROTTLING CALORIMETER ATTACHED TO LOCOMOTIVE.

boiler was filled to a point where water could be seen coming from the stack. Immediately when the boiler foamed, the thermometer in the second calorimeter dropped to 212°. It is believed that this calorimeter is more accurate for locomotive work, because it often happens that the locomotive primes only at starting and not for a sufficient length of time to enable the throttling instrument to make a true record. And again, there are in a locomotive rapid changes in the rate of steam consumption which must cause rapid changes in the quality of the steam.

435. **Experimental Engines.**—During the last few years many of the engineering schools have been provided with en-

gines designed especially for experimental purposes. These engines do not resemble each other in any particular feature, but they do generally differ from the engines designed for commercial uses in the provision that is made for adjustment of the various working parts, and for varying the conditions under which the engine can be operated. Such engines are usually supplied with all the known devices for measuring the heat transmitted, the power received and that delivered from the whole or any part of the system.

Space cannot be spared for the detailed description of any of these engines, but the following are the principal dimensions of the Sibley College experimental engine, shown as the frontispiece of the present work.

GENERAL DIMENSIONS OF SIBLEY COLLEGE EXPERIMENTAL ENGINE.

Diameter of high-pressure cylinder		9	inches
" " intermediate-pressure cylinder		16	"
" " low-pressure cylinder		24	"
Length of stroke		36	"
Revolutions per minute, 90.			
Diameter of fly-wheels	10 feet		
Width of face of fly-wheels		17	"
Number of fly-wheels, 3.			
Diameter of brake-wheels	4 feet		
Width of face of brake-wheels		10	"
Number of brake-wheels, 3.			
Diameter of high-pressure crank-pin		3½	"
Diameter of intermediate-pressure crank-pin		7	"
Diameter of low-pressure crank-pin		3½	"
Length of crank-pin		3½	"
Length of connecting-rods	9 feet		
Diameter of main bearings		7	"
Length of main bearings		13	"
Length of pillow-block bearings		10½	"
Distance between centre lines of high-pressure and intermediate-pressure engines	14 feet		
Distance between centre lines of intermediate-pressure and low-pressure engines	12 feet	6	"

Rated horse-power, 175.

Floor-space occupied, 23 feet 9 inches × 31 feet 7 inches.

HIGH-PRESSURE CYLINDER.

Steam-ports	$\frac{5}{8}$ in.	× 12	inches
Exhaust-ports	$1\frac{1}{8}$ "	× 12	"
Diameter of steam-valve seats		$3\frac{1}{4}$	"
Diameter of exhaust-valve seats		$3\frac{1}{4}$	"
Thickness of steam-space in jacket		$\frac{1}{2}$	"
Diameter of piston-rod		$2\frac{5}{16}$	"
Diameter of steam-inlet		3	"
Diameter of exhaust-outlet		5	"

INTERMEDIATE-PRESSURE CYLINDER.

Steam-ports	1 in.	× 20	inches
Exhaust-ports	$1\frac{3}{4}$ "	× 20	"
Diameter of steam-port		5	"
Diameter of exhaust-port		5	"
Thickness of steam-space in jacket		$1\frac{1}{8}$	"
Diameter of piston-rod		$2\frac{5}{16}$	"
Diameter of steam-inlet		6	"
Diameter of exhaust-outlet		5	"

LOW-PRESSURE CYLINDER.

Steam-ports	$1\frac{3}{8}$ in.	× 28	inches
Exhaust-ports	$2\frac{1}{2}$ "	× 28	"
Diameter of steam-ports		$6\frac{1}{2}$	"
Diameter of exhaust-ports		$6\frac{1}{2}$	"
Thickness of steam-space in jacket		$\frac{3}{4}$	"
Diameter of piston-rod		$2\frac{5}{16}$	"
Diameter of steam-inlet		6	"
Diameter of exhaust-outlet		8	"

All the moving parts were weighed before they were put in place.

The weights are as follows:

Fly-wheels	20,807	pounds
Brake-wheels	5,264	"
Crank-shaft and eccentrics complete	9,958	"
Total weight of crank-shaft, fly-wheels, brake-wheels, and eccentrics	36,029	"
Weight of high-pressure piston and cross-head	$378\frac{1}{2}$	"
Weight of intermediate-pressure piston and cross-head	503	"
Weight of low-pressure piston and cross-head	790	"
Weight of high-pressure connecting-rod	281	"
Weight of intermediate-pressure connecting-rod	341	"
Weight of low-pressure connecting-rod	282	"

The connecting-rods were suspended on knife-edges, and the time of their vibration was taken as follows:

	End on knife-edge.	Time of 100 vibrations
Low-pressure	Crank end	4 min. 45 sec
	Cross-head end	4 " 44⅜ "
Intermediate-pressure	Crank end	4 min. 57⅜ sec.
	Cross-head end	4 " 41⅛ "
High-pressure	Crank end	4 min. 44⅜ sec.
	Cross-head end	4 " 45 "

RECEIVER DIMENSIONS.

HIGH-PRESSURE RECEIVER.		INTERMEDIATE-PRESSURE RECEIVER.	
Length	11 ft. 7 in.	Length	11 ft. 7 in.
Diameter	14 "	Diameter	20 "
Number of tubes	15	Number of tubes	19
Diameter of tubes	1¼ "	Diameter of tubes	2¼ "
Receiver volume	8.2 cu. ft.	Receiver volume	15.8 cu. ft.
Heating surface	62.34 sq. ft.	Heating surface	119.8 sq. ft.

The methods of testing experimental engines do not differ in any essential feature from those for testing any engine of the same general class.

CHAPTER XX.

EXPERIMENTAL DETERMINATION OF EFFECTS OF INERTIA ON THE STEAM-ENGINE.

436. Inertia and its Effects.*—The effect of inertia of the moving parts of the steam-engine is to modify to a considerable extent the resultant pressures which are transmitted by the connecting-rod to the crank-pin. The exact solution of this problem, including the effects of friction and gravity, has been accomplished by Prof. Jacobus and is published in the Trans. Am. Society of Mechanical Engineers, Vol. XI. Complete discussions of the effects of inertia will be found in various works devoted to the steam-engine; also approximate methods, usually graphical, are given in these treatises which are sufficiently accurate for practical purposes.

Prof. Jacobus gives the following formula for the approximate calculation of the inertia-effects when friction and gravity are neglected, and when the rod is symmetrical about its centre line, and the path of motion of the wrist-pin passes through the centre of the crank-shaft.

Let R equal radius of crank-circle; nR, length of connecting-rod; θ, the crank-angle measured from its position when parallel to the centre line of the cylinder; M, mass of the piston, piston-rod, and cross-head; m, the mass of the connecting-rod; τ, angular velocity of crank-shaft; δ, connecting-rod angle; P_n and P_c, forces exerted by the connecting-rod upon wrist-pin and crank-pin, respectively; P_a, pressure of steam on the piston; T, tangential component of the force P_c acting on

* See Thurston's Manual of the Steam-engine, Vol. II., page 425.

the crank-pin; N, radial component of the force P_c acting at the crank-pin; Z and P_b, auxiliary quantities. We have

$$Z = \frac{n^2 \cos^2\theta - n^2 \sin^2\theta + \sin^4\theta}{(n^2 - \sin^2\theta)^2};$$
$$P_b = (M + m)\tau^2 R(\cos\theta + Z);$$
$$T = (P_a - P_b) \sec\beta \sin(\theta + \beta);$$
$$N = (P_a - P_b) \sec\beta \cos(\theta + \beta);$$
$$P_c = (P_a - P_b) \sec\beta.$$

When the accelerating forces are not included,

$$T = P_a \sec\beta \sin(\theta + \beta);$$
$$P_c = P_a \sec\beta.$$

In this work is discussed only the experimental method of determining the inertia of an engine as developed by Mr. E. F. Williams of Buffalo, N. Y., and published in the *American Machinist* in 1884 and '5.

437. **The Williams Inertia-indicator.**—This instrument draws a curve (see Fig. 290) closely resembling the theoretical inertia-diagram, and similar in kind to an indicator-card. The horizontal length of the diagram corresponds to the stroke. The abscissa of any point of the curve identifies the position of the piston at a corresponding point in its travel, and its ordinate measures to a known scale the force required to give to a mass of known weight (one or two pounds) the acceleration, positive or negative, of the piston at that point of its stroke. The product of this force into the weight of the reciprocating parts, in pounds, gives for that point of stroke the positive or negative horizontal force at the crank-pin due to the inertia of the parts. The instrument is shown in Fig. 290 attached to the cross-head of an engine, and in Fig. 292 in plan.

The frame P is rigidly attached to the cross-head A by two studs j and r, the former serving also as a pivot for the arm B. The upper end of B is pivoted to one end of a horizontal bar y whose other end is attached by a pin to some fixed support. In this way B swings back and forth, its lower end, together

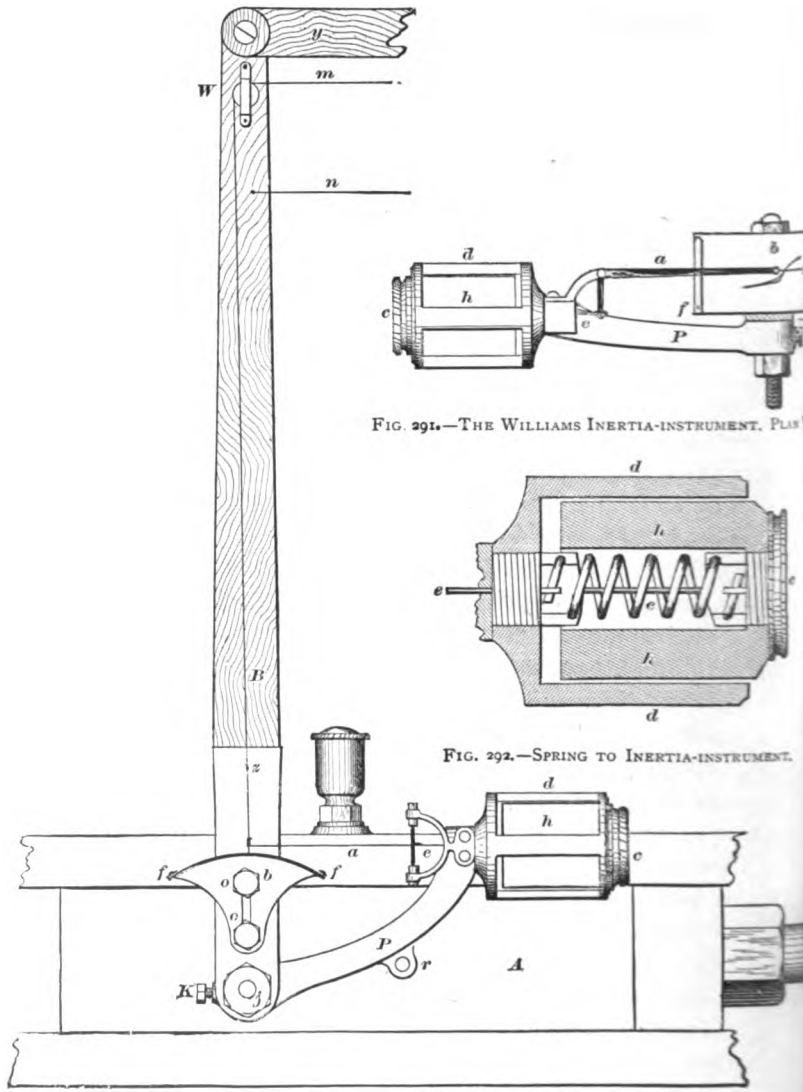

FIG. 290.—THE WILLIAMS INERTIA-INDICATOR.

FIG. 291.—THE WILLIAMS INERTIA-INSTRUMENT. PLAN

FIG. 292.—SPRING TO INERTIA-INSTRUMENT.

with the frame *P* and the parts carried by it, travelling with the cross-head. Within the case or cage *d* (shown in section in Fig. 292) the weight *h* is free to slide horizontally on steel friction rollers, except as controlled by the spring. This spring, whose tension is known by calibration, is the only means by which the motion of the cross-head is communicated to the weight *h*, and it must therefore be extended or compressed by an amount which measures the force needed to overcome the inertia of the weight.

For convenience *h* may be made to weigh, including the parts moving with it, exactly one pound. It is joined by a light rod *e* to the bent lever *a* which moves a pencil in a direction at right angles to that of the cross-head motion. By the vibration of the arm *B* the paper is carried under the pencil on the curved platform *b* shown in Figs. 290 and 291. This can at pleasure be drawn upward by the cord *m*, and kept in contact with the pencil for one or more revolutions while the engine is in motion. The paper is put in place while the engine is at rest, and the neutral line *x*, Fig. 291, is drawn by swinging the arm *B* back and forth by hand. As soon as the engine is running under the conditions desired, contact may be made and the diagram drawn.

In using the instrument so as to make a diagram from 2 to 3 inches long, the arm *B* may be varied in length to suit the stroke of the engine. To maintain a given average length of ordinates for widely differing speeds, the scale may be changed by changing the spring, or the weight, or both.

For obtaining the effect per pound weight of the reciprocating masses, determine the scale as follows: The force exerted by an 80-lb. indicator-spring when it is compressed or extended $\frac{1}{4}$ inch, causing a pencil-movement of one inch, is 80 lbs. per square inch of indicator piston-area. The latter being one-half square inch, the actual force on the spring is 40 lbs. If, then, an 80-lb. spring with a 2-lb. weight be used, a 1-inch ordinate, will mean 40 lbs. exerted by the spring in total, or a force of 20 lbs. per pound of the mass it moves.

Thus a scale 20 means a force, for each inch of ordinate measured from the neutral line, equal to twenty times the weight of the moving body under investigation. In other words, each twentieth of an inch in length of ordinate represents a force equal to the weight of the reciprocating masses.

An	80-lb.	spring	with a	1-lb.	weight,	scale 40
"	80-lb.	"	" "	2-lb.	"	" 20
"	40-lb.	"	" "	1-lb.	"	" 20
"	20-lb.	"	" "	1-lb.	"	" 10

438. The Inertia-diagram drawn by the Instrument.—In interpreting the diagram several points are to be noted:

1. The evenness and general form of the diagram are largely influenced by the smoothness of running of the engine, which depends on the accuracy of bearing surfaces, and the degree in which the weight of reciprocating parts, their velocities, and the varying steam-pressures are suited to each other.

2. The curvature of the lines traced depends chiefly on the ratio of crank-length to that of connecting-rod; this ratio should be determined by measurement.

3. In combining the diagram with an indicator-card the ordinates should represent forces in pounds per square inch of piston-area, and in the same scale as that of the indicator-card. For this we determine by independent measurement (1) the force exerted by the spring for a given length of ordinate from the neutral line; (2) the ratio of the weight of the reciprocating parts of the engine to that of the parts of the instrument moved by the spring; and (3) the area of the engine-piston.

4. The difference in length of the corresponding ordinates in the inertia and indicator diagrams, the latter corrected for back pressure or compression, represents the net horizontal force transmitted to the crank-pin.

For combination with a steam indicator-card, the force per square inch of piston-area is required. This is best obtained by getting the *weight-ratio* or the weight of reciprocating parts per square inch of piston-area. This multiplied by the scale of the inertia-diagram gives the *engine-scale* or scale of pounds per

square inch at the speed at which the diagram was taken. An example will make this clear. The inertia-diagram in Fig. 234, taken from a very smooth-running engine, was obtained with an

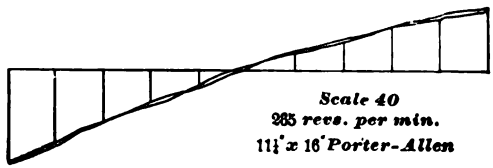

FIG. 293.—INERTIA-DIAGRAM.

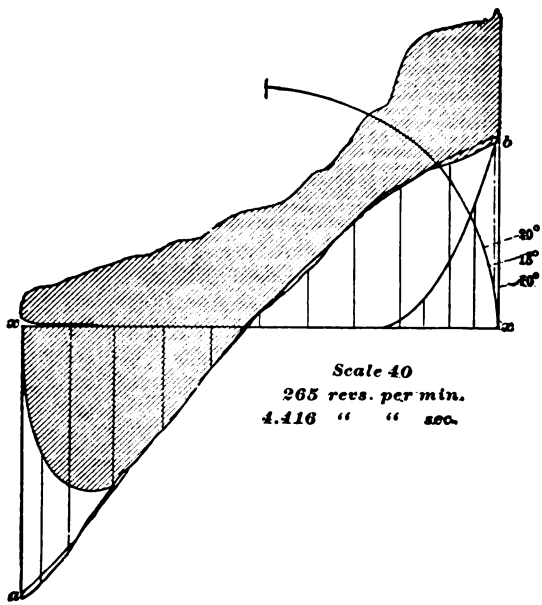

FIG. 294.—INERTIA AND INDICATOR DIAGRAMS.

80 spring and a one-pound weight. Hence the *diagram-scale* is 40. But for this engine the *weight-ratio* was 3. Hence $40 \times 3 = 120$ is the *engine-scale.*

Having, now, this inertia-diagram (Fig. 234) whose engine-scale is 120, suppose we are to combine it with an indicator-diagram (Fig. 235) from the same engine at same speed, and taken with a 40 spring. The scale of the inertia-diagram can

be changed from 120 to 40 by drawing it with the ordinate of each point increased three times, giving the curve *ab* in Fig. 294. The ordinates to the compression curve on the back stroke can be deducted from the corresponding ordinates of the inertia curve *ab*, and the included area shaded, thus exhibiting the modification of the steam-forces by the inertia of the reciprocating parts. By vertical measurement of the shaded portion, the true distribution of horizontal forces on the crank-pin during the backward stroke may be obtained.

Important Features of the Experimental Diagram.—Suppose that in Fig. 295 *p* and *c* are the positions respectively

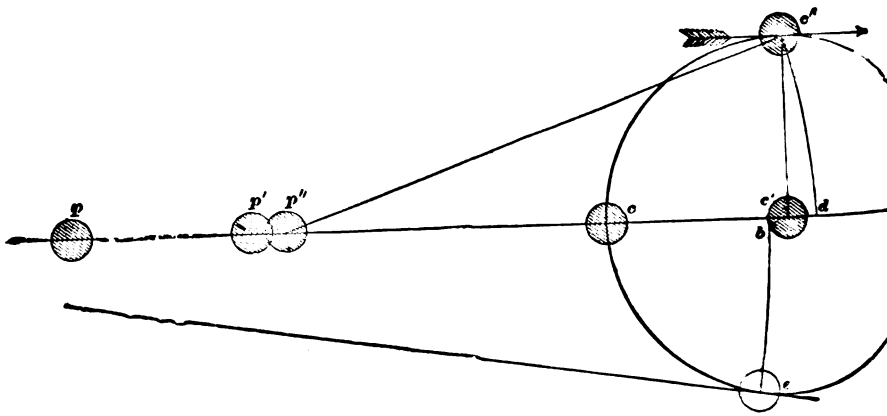

FIG. 295.—RELATIVE MOTION OF CRANK-PIN AND PISTON.

of the cross-head and crank-pins with crank on its centre. Then, were it not for the angle of the connecting-rod, the cross-head pin would go to p' when the crank has moved to c'', pp' being equal to cc'.

But its true place is at p'': thus in the quarter-turn of the crank from c to c'' the cross-head has gone a distance $p'p''$ past its mid-stroke, and is then moving at the same speed as the crank-pin, while its maximum speed was attained before reaching mid-stroke. Again, on the return-stroke, when the crank is lowest, the piston has not gone half-way. This shows that the acceleration is greater when the piston is at the head

end of cylinder. The same thing is shown in Fig. 296, xy being much greater than $x'y'$, while the fact that point of crossing of yy' and xx' is at the left of the centre shows that the

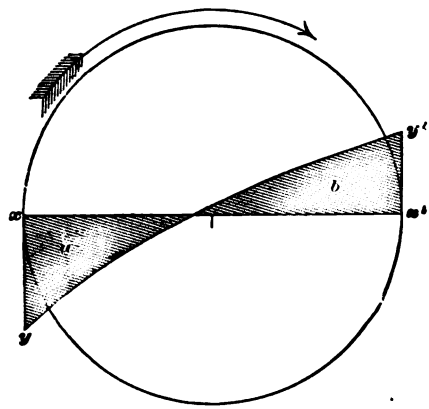

FIG. 296.—INERTIA-DIAGRAM.

zero of acceleration, which of necessity corresponds with maximum velocity, falls where it should.

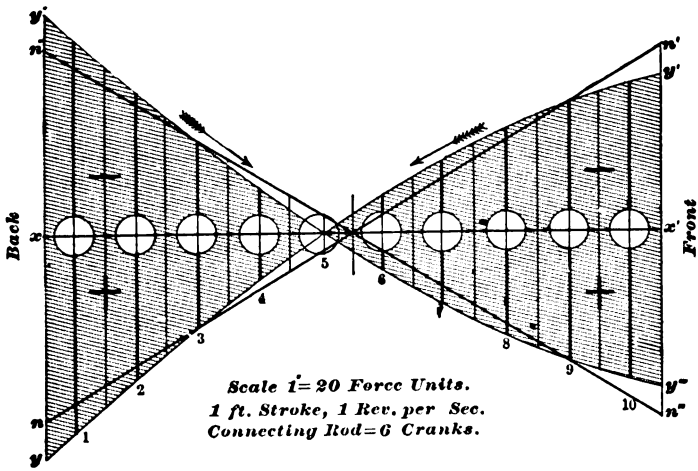

FIG. 297.—INERTIA-DIAGRAMS.

All this is revealed in the same way in the experimental inertia-diagram Fig. 293, page 665, and the accuracy of the dia-

gram may be further tested by comparing the area below the neutral line with that above it by means of a planimeter.

In Fig. 297 the inertia-diagrams for forward and backward strokes have been separated. The negative and positive signs show respectively where the inertia opposes and assists the steam-pressures. The curve $y''y'''$ belongs to the forward stroke and $y'y$ to the return.

In practical use the diagram should be divided into ten or more equal spaces, and the ordinate at the centre of each space being numbered, the crank-positions corresponding, may be found as shown in Fig. 298, and the relative velocity of

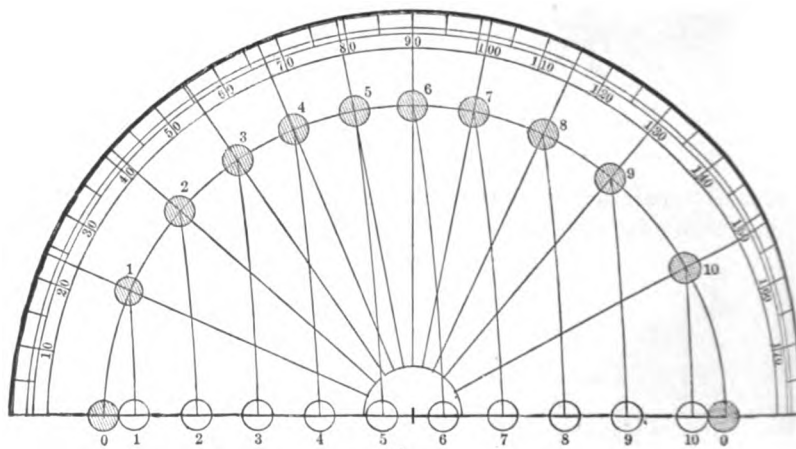

FIG. 298.—CRANK-POSITIONS CORRESPONDING TO GIVEN PISTON-POSITIONS.

piston and crank obtained. The method of dividing the diagram shown in Fig. 297 is convenient in transferring the curve to a steam indicator-card similarly divided. Care being taken to draw both to the same scale and in pounds per square inch of piston, the inertia curves may be drawn on an indicator-card arranged as shown in Fig. 299. Here the back-stroke steam-card has been drawn inverted and in contact with the forward card in its normal position, the two back-pressure lines being made coincident and used as the neutral inertia line.

The ordinate lines are then produced to cut the line $X'X'$, which serves as a base-line from which to lay off ordinates of the net horizontal forces at the crank-pin. The actual forces

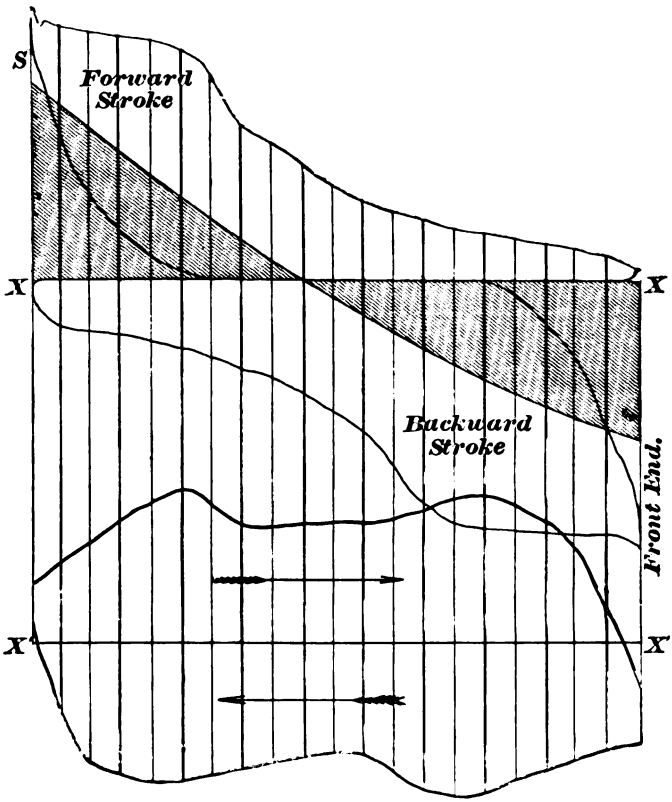

FIG. 299.—COMBINED DIAGRAMS.

at the crank-pin are thus more clearly revealed for both strokes, and the areas above and below $X'X'$ respectively, give the actual work on the crank-pin for forward and return strokes.

CHAPTER XXI.

THE STEAM-INJECTOR—THE PULSOMETER.

439. Description of the Injector.—The steam-injector is an instrument designed for feeding water to steam-boilers, although it can be and often is used as a pump to raise water from one level to another.* It has been used as an air-compressor, and also for receiving the exhaust from a steam-engine,

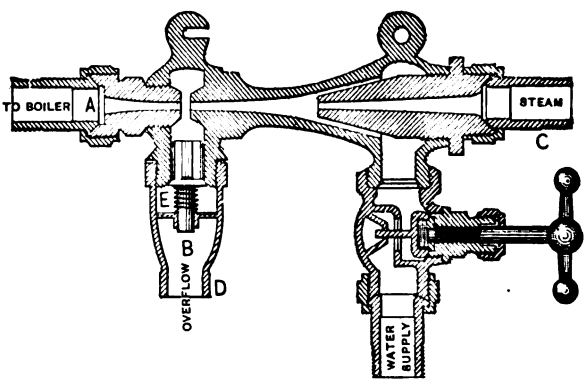

FIG. 300.—THE MACK NON-LIFTING INJECTOR.

taking the place in that case of both condenser and air-pump. It was designed by Henri Jacques Giffard in 1858.

In its most simple form (see Fig. 300) it consists of a steam-nozzle, the end of which extends somewhat into a chamber or converging tube called the combining or suction-tube; this

* See Cassier's Magazine, January and February, 1892; Thermodynamics by D. Wood, page 279; Thermodynamics, by C. H. Peabody, page 152.

connects with, or rather terminates in, a third nozzle or tube, *A* (Fig. 300), termed the "forcer." At the end of the *combining tube*, and before entering the forcer, is an opening connecting the interior of the nozzle at this point with the surrounding area. This area is separated from the outside air by a check-valve, *E*, opening outward in the automatic injectors, and by a globe valve termed the overflow-valve in the non-automatic injector. The injector-nozzles are tubes with ends rounded to conform to the form of the "vena contracta" as nearly as possible, and thus receive and deliver the fluids with the least possible loss by friction and eddies.

Some of the injectors are quite complicated, and adjust

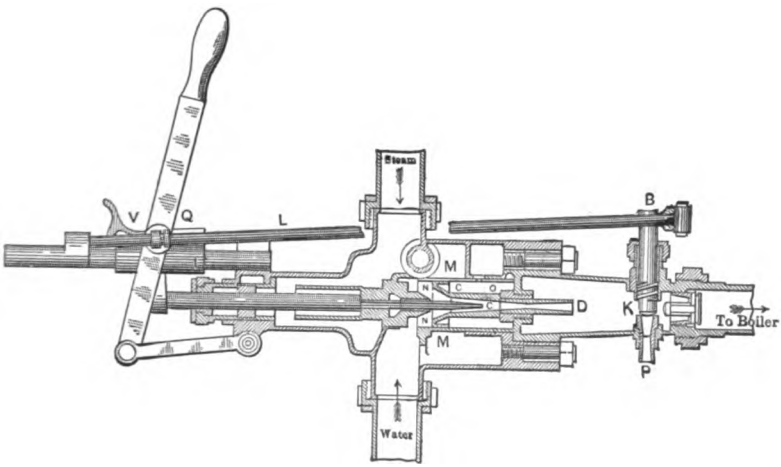

FIG. 301.—THE SELLERS INJECTOR.

themselves automatically by varying the openings through the tubes to suit changes in steam-pressure.

Fig. 301 is a section of the Sellers injector of 1876; in this injector the steam-nozzle *C* can be inserted a greater or less distance, as required, into the combining-chamber *NN*. The overflow *P* is closed by a valve *K* operated by a rod *L* connected to the starting-lever *T*. The tube *NNCO* moves

automatically to vary the opening at C with change of steam-pressure.

In some of the injectors the tubes are so arranged that the discharge of one injector is made the feed for a second injector. This makes what is termed a double injector, of which familiar illustrations are to be seen in the Hancock, Park, and World injectors.

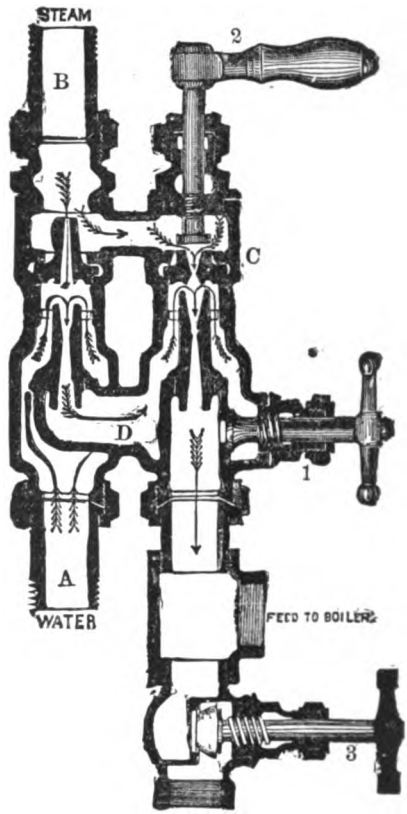

FIG. 302.—THE HANCOCK INSPIRATOR.

440. Thermodynamic Theory of the Steam-injector.—As a thermodynamic machine the injector is nearly perfect, since all the heat received by it is returned to the boiler, ex-

cepting a very small part that is lost by radiation; consequently the thermal efficiency should be in every case nearly 100 per cent. Its mechanical efficiency, or work done in lifting water, compared with the heat expended, is small, because its heat-energy is principally used in warming up the cold water as it enters the injector.

Let r equal the heat of evaporation in B. T. U. of a pound of dry steam; x, its quality; q, heat of the liquid of the entering steam in thermal units above 32°; q_2, heat of discharge-water in thermal units above 32°; h, the total heat in a pound of wet steam; w, the weight of steam per hour uncorrected for calorimeter-determinations; W, the weight of water supplied; t, the temperature of the feed-water; t', the temperature of the delivery. Then we have, as the heat in one pound of the steam supplied, above 32°,

$$h = xr + q. \quad . \quad . \quad . \quad . \quad . \quad . \quad . \quad (1)$$

If the mechanical work consist of W pounds of water lifted n feet by pressure and s feet by suction, the heat equivalent F of the mechanical work is

$$F = [(n + s)W + wn]A, \quad . \quad . \quad . \quad . \quad . \quad (2)$$

if delivered from the end of the discharge-pipe without sensible velocity. In case there is a velocity of v_1 feet per second at delivery from discharge-pipe, the additional energy L, in heat-units, is

$$L = A(W + w)v_1^2 \div 2g. \quad . \quad . \quad . \quad . \quad . \quad (3)$$

The heat-units taken up by the feed-water are

$$K = W(t' - t). \quad . \quad . \quad . \quad . \quad . \quad . \quad . \quad (4)$$

The thermal efficiency E, if the injector is used for feeding boilers, is

$$E = \frac{F + L + K}{w(h - q_2)}. \quad . \quad . \quad . \quad . \quad . \quad . \quad (5)$$

If used as a pump, the heat K received by the discharge-water is to be neglected, and the efficiency E_p is

$$E_p = \frac{F + L}{w(h - q_s)}. \quad . \quad . \quad . \quad . \quad . \quad . \quad (6)$$

441. Mechanical Action of the Injector.—In this case we consider only the impact of the jet of steam at high velocity against the mass of water. The case being similar to that of a small inelastic ball, moving at high velocity, impinging on a large ball.

Denote the velocity of the steam by v, that of the water before impact by V_1, and after impact by V; then by the principles of impact of inelastic bodies,

$$\frac{wv}{g} + \frac{WV_1}{g} = \frac{(W + w)V}{g}. \quad . \quad . \quad . \quad . \quad . \quad (7)$$

When water is supplied the injector under pressure, the sign of V_1 is positive, otherwise it is negative. The use of this equation requires the velocity of the steam, v; that of the supply, V_1; and of the discharge, V, to be given.

The *velocity of the steam*, v, will not differ essentially from 1400 feet per second for the conditions in which it is used in the injector (see Article 230, page 301).

The velocity of the water discharged, V, from the injector may be found by dividing the volume that is delivered in cubic feet per second, c, by the area of the discharge in square feet, A; that is,

$$V = \frac{c}{A} = \frac{C}{3600} \times \frac{144}{a} = \frac{C}{25a}; \quad . \quad . \quad . \quad . \quad (8)$$

in which C represents the discharge in cubic feet per hour, and a the area of the discharge-nozzle in square inches.

The *velocity of the water supplied*, V_1, in the suction-pipe may be found by ascertaining the equivalent head, n_1, that will produce the same velocity. If p be the absolute pressure per square inch in the combining-chamber; b, the pressure per square inch, as shown by a barometer or pressure-gauge, on the water-supply; w'', the weight of a cubic foot of water at the temperature of the supply; s, the suction-head in feet,—then

$$n_1 = \frac{144(b-p)}{w''} - s; \quad . \quad . \quad . \quad . \quad . \quad . \quad (9)$$

$$V_1 = \sqrt{2gn_1}.$$

The velocity of the suction is, however, expressed more conveniently by considering a body of water with a head, s, acting to accelerate or retard the whole mass of water in the injector. Let A be the smallest section of the water-jet, w'' the weight of a unit of water; then the pressure due to s feet of water will be saw''. As this acts on a mass of water $Vaw'' \div g$, the velocity imparted would be

$$\frac{saw''}{\frac{Vaw''}{g}} = \frac{sg}{V}.$$

The total momentum produced by the suction would be

$$\frac{W+w}{gw}\left(\frac{sg}{V}\right) = \left(1+\frac{W}{w}\right)\frac{s}{V} = (1+y)\frac{s}{V}, \quad . \quad . \quad (10)$$

in which

$$y = W \div w.$$

The momentum produced by the suction would be negative, unless water was delivered to the injector under pressure.

As shown in equation (7) the momentum of the suction is $\frac{WV_1}{g}$, which for one pound of steam would be $\frac{W}{w}\frac{V_1}{g} = y\frac{V_1}{g}$.

Substitute this value for the momentum of the suction in equation (7), representing $W \div w$ by y. We have

$$\frac{v}{g} + (1+y)\frac{s}{V} = \frac{(1+y)V}{g},$$

or

$$v = (1+y)\left(V - \frac{sg}{V}\right). \quad \ldots\ldots \quad (11)$$

From which

$$1+y = \frac{vV}{V^2 - sg}. \quad \ldots\ldots\ldots \quad (12)$$

The plus sign to be employed before s when the suction-water is supplied under pressure; otherwise the negative sign is to be used.

If the friction in the pipe be neglected,

$$V = \sqrt{2gn},$$

and we have

$$y = \frac{v\sqrt{2gn}}{2gn - sg} - 1. \quad \ldots\ldots \quad (13)$$

442. **Limits of the Injector.**—*Maximum Amount of Water Lifted.*—This may be obtained from equation (12) or (13), but it can be obtained with sufficient accuracy by neglecting the momentum $\frac{WV'}{g}$ due to the suction-water in equation (7); in this case

$$wv = (W+w)V,$$

from which

$$y = \frac{W}{w} = \frac{v}{V} - 1 = \frac{v}{\sqrt{2gn}} - 1 = \frac{1400}{\sqrt{2gn}} - 1, \text{ nearly.} \quad (14)$$

The maximum ratio of water to steam is shown by the following table:

Delivery Pressure above that on Injector.	Maximum Ratio of Water to Steam by Weight.	Delivery Pressure above that on the Injector.	Maximum Ratio of Water to Steam by Weight.
10	36.5	55	15.5
15	29.8	60	14.7
20	25.6	65	14.3
25	23.8	70	13.7
30	20.9	75	13.3
35	19.5	80	12.9
40	17.87	85	12.6
45	17.0	90	12.1
50	16.2	100	11.5

The *minimum amount of water required* must be sufficient to condense the steam, in which case

$$y = \frac{W}{w} = \frac{h - q_1}{t' - t}, \quad \ldots\ldots\ (15)$$

in which h is the heat in one pound of entering steam; q_1, the heat of the liquid in the delivery, both reckoned from 32°; t', the temperature of the delivery; t, that of the feed-water, so that the ratio cannot be greater than shown in equation (14) nor less than that shown in equation (15).

Temperature of Feed-water.—As the temperature of the feed-water increases vapor is given off which increases the pressure, b, in equation (9) on the surface of the supply-water, and reduces the height through which the water can be lifted.

If the temperature of the feed-water is greater, the amount required to condense the steam must also be greater; but as the amount lifted by a given amount of steam cannot exceed the approximate value given in equation (14), we shall have at the extreme limit at which the injector works, the values of y as given in equations 14 and 15 equal to each other, from which the maximum temperature of feed-water becomes

$$t = t' - \frac{(h - q_1)v}{v - V} = t' - \frac{(h - q_1)(1400)}{1400 - \sqrt{2gn}}, \text{ nearly.}$$

The following table gives approximately the limiting values of suction-head in feet and temperature of feed-water:

LIMIT OF SUCTION-HEAD IN FEET.

Temperature of Feed-water. Degs. Fahr.	Pressure of Vapor. Pounds per sq. inch.	Limit of Suction-head in case of Vacuum. Feet.	Steam-pressure 100 lbs. Absolute.	
			Delivery 212° Fahr. Number of Pounds of Water to condense one of Steam.	Delivery 180° Fahr. Number of Pounds of Water to condense one of Steam.
70	0.36	32.96	7.04	8.81
80	0.50	32.6	7.57	9.61
90	0.69	32.2	8.19	10.76
100	0.94	31.4	8.92	12.11
110	1.26	30.9	9.80	13.84
120	1.68	29.7	10.87	16.15
130	2.22	27.3	12.20	19.32
140	2.87	25.9	13.89	24.22
150	3.70	24.8	16.13	32.3
160	4.72	22.5	19.23	48.45
170	5.98	19.6	23.81	96.90
180	7.50	16.9	31.25	
190	9.33	9.9	45.46	
200	11.52	9.3	83.33	
210	14.12	1.1	500.9	

MAXIMUM TEMPERATURE FEED-WATER.

Gauge Pressure. Pounds per sq. inch.	Maximum Temperature of Feed-water. Degrees Fahr.		Gauge Pressure. Pounds per sq. inch.	Maximum Temperature of Feed-water. Degrees Fahr.	
	Discharge 180° Fahr.	Discharge 212° Fahr.		Discharge 180° Fahr.	Discharge 212° Fahr.
20	142	173	70	109	139
25	137	168	75	107	137
30	133	164	80	105	134
35	129	160	90	99	129
40	126	156	100	95	125
45	123	153	110	91	121
50	120	150	120	87	117
55	117	147	130	83	113
60	114	144	140	80	110
65	111	141	150	77	107

A series of carefully conducted experiments* made at Sibley College, Cornell University, to determine the efficiencies of different steam injectors, confirm the results expressed in the preceding computations.

443. Directions for Handling and Setting Injectors.—Injectors are of two general classes, lifting and non-lifting. In the first class water is drawn in by suction and then discharged against a pressure; in the second class water flows in under pressure and is discharged against a greater pressure.

As there is a limit to the temperature at which water will be handled by the injector, variations in steam-pressure will affect the discharge and may cause it to stop altogether. This may be regulated to a certain extent by manipulating the valves of the steam and water supply; some injectors are self-adjusting in this respect and are termed *automatic*.

The *general directions for starting an injector* are to open the overflow, turn on steam until the water appears at the overflow, and the temperature of the injector is sufficiently low to condense the steam. Then close the overflow and the injector should discharge against a pressure equal to or greater than the steam-pressure. In many of the injectors the overflow valve will open whenever the pressure in the injector becomes greater than that of the atmosphere. In several kinds the overflow is closed by a valve regulated independently or connected by a lever to the starting handle so as to be opened and closed at the proper time by the simple operation of admitting steam.

Injectors will not work with oily or dirty water, and are liable to be stopped by anything that will not pass the nozzles. In general they are to be connected by pipe-fittings made up without red lead and arranged so as to deliver water into a pipe leading to the boiler, in which is placed a check-valve to remove the boiler-pressure when starting the injector.

444. Directions for Testing.—For testing the injector use two tanks, both of which are to rest on weighing-scales.

---

* See Cassier's Magazine, Feb. 1892.

Fill one of the tanks with water, and locate the injector any convenient distance above or below this tank, and arrange it so as to deliver water into the second tank.

If the water that escapes at the overflow is arranged to run into the tank from which the water is taken, no correction will be required; otherwise it must be caught and weighed.

Place a valve in the delivery-pipe, some distance from the injector or beyond an air-chamber, and regulate the delivery head by partly opening or closing this valve. The delivery-pressure, which can be reduced to head in feet of water, can be measured by a pressure-gauge in the delivery-pipe; the suction-pressure is observed in a similar manner by using a vacuum-gauge or a manometer.

The water received, W, is that taken from the first tank; the amount delivered, $W + w$, is that weighed in the second tank; the difference is w, the steam used.

Arrange thermometers to take the temperature of the water as it enters and leaves the injector.

Make runs with discharge-pressures equal respectively to one-fourth, one-half, three-fourths, once, and one and one-fourth times that on the boiler. During each run take observations, as required by the blank log furnished, once in two minutes.

Determine the limits at which the injector stops working, for temperature of feed-water, suction-head and delivery-head.

Careful trials show that the thermodynamic efficiency of any injector is 100 per cent; by assuming this as true the second tank may be dispensed with, and the amount of steam computed from its heating effect and known quality on the water passing through the injector.

In the report, describe the injector tested, explain method of action, and submit a graphical log, with time as abscissa, as well as an efficiency curve for varying pressures of discharge, also for varying temperatures of discharge.

Fill out the log and make complete report, after the standard form.

445. Form for Data and Results of Injector-test.

Made by.....

Injector..... No. of Injector.....

Manufacturer..... Date of Test.....189..

Diam. suction-pipe..... Diam. discharge-pipe..... Diam. steam-orifice..... Diam. water-orifice .....

Area " ..... Area " ..... Area " ..... Area " .....

LOG OF TEST.

Quantities.	1	2	3	4	5	6	7	8	9	10	11	12	13	14	15	16	Average.	Corrected.
Time.....																		
Injector-gauge, lbs. pressure.....																		
Delivery-gauge, lbs.																		
Suction-gauge, inches.....																		
Delivery in feet, n.....																		
Suction in feet, s																		
Temperature of supply, t.....																		
Temperature of delivery, t'.....																		
Liquid-heat of delivery, q.....																		
Temperature of calorimeter.....																		
Temperature of room																		
Water supplied.....																		
Water delivered																		
Time of ending.....																		
Duration of run.....																		

Barometer-gauge, inches.....Boiling point.....Fahr.

DATA AND RESULTS.

Quantities.	Symbol.	Formula.
Discharge-head	n	
Suction-head	s	
Water per hour supplied	W	
Water per hour delivered	$W+w'$	
Wet steam per hour	w'	
Quality of steam	x	
Dry steam per hour	w'	xw
Pounds of water to one of wet steam	y'	$\frac{W}{w'}$
Pounds of water to one of dry steam	y	$\frac{W}{w}$
Steam-pressure on injector, absolute	p	
Steam-pressure on orifice, absolute	p_1	$.6p$
Cubic feet steam per hour	c	w(vol. one lb.)
Cubic feet water per hour delivered	C	$(W+w')$(vol. one lb.)
Velocity steam in nozzle, ft. per sec.	v	Adiabatic flow
Velocity water in nozzle, ft. per sec.	V	$\frac{C}{25\text{ (area)}}$
Velocity suction-lift	V_1	$\frac{sg}{V}$
Velocity of discharge, ft. per sec	v_1	$\frac{C}{25\text{ (area dis. pipe)}}$
Momentum, one lb. steam	m	$\frac{v}{g}$

Quantities.	Symbol.	Formula.
Momentum $(1+y')$ lbs. delivered	M	$\frac{V}{g}(1+y')$
Momentum suction	M'	$\pm(1+y')\frac{s}{V}$
Efficiency impact	e	$\frac{M+M'}{m}$
Work delivered, B. T. U. per hour	F	$[(n+S)W+wn]\div 778$
Heating injection-water, B. T. U. per hour	K	$W(t-t')$
Energy of discharge, B. T. U., from pipe	L	$A\frac{(W+w')v_1^2}{2g}$
Energy from steam, B. T. U. per hr.	R	$[w(h-q_2)]+(F+L)$
Thermal efficiency	E	$\frac{F+K+L}{R}$
H. P per 34½ lbs. of steam	H	$\frac{(W+w')f}{34\frac{1}{2}}$
H. P delivered per hour	F'	$\frac{FJ}{60\times 33000}$
Ft.-lbs. per 1000 lbs. of steam	D'	$\frac{1000FJ}{w}$
Ft.-lbs. per 1,000,000 B. T. U.	D	$\frac{1{,}000\,000FJ}{(h-q_2)w}$
Pounds of steam per H. P.		$\frac{w}{F'}$

Remarks [illegible] factor of evaporation.

446. The Pulsometer.—This is a pump consisting of two bottle-shaped cylinders joined together with tapering necks, into which a ball *C* is fitted so as to move in the direction of least pressure, with a slight rolling motion, between seats formed in the passages. These chambers connect by means of openings fitted with clack-valves, *E E*, into the induction-chamber *D*.

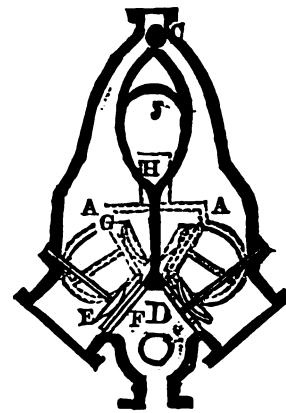

FIG. 303.—THE PULSOMETER.

The water is delivered through the passage *H*, which is connected to the chamber by openings fitted with valves *G*. Between the chambers is a vacuum-chamber *J* which connects with the induction-passage *D*. Air is supplied the chambers by small air-valves moving inward, which open when the pressure is less than atmospheric.

The method of working is as follows: Conceive the left chamber full of water, and a vacuum in the right chamber; steam enters to the left of the valve *C*, presses directly on the surface of the water, and forces it past the check-valve *G* into the delivery-passage *H* and air-chamber *J*; at the same time the right chamber is filling with water, which rushes in and by its momentum moves the valve *C* to the left. The steam in the left chamber condenses, forming a vacuum, and the operation described is repeated, except that the conditions in the two chambers are reversed.

All the steam entering is condensed and forced out with the water, increasing its temperature.

The analysis is very similar to that of the injector, except that the steam acts by pressure instead of by impact. The theory is fully stated in "Thermodynamics," by Prof. De Volson Wood, page 293. Thus: if w equal the weight of steam, W the weight of water raised, t the temperature of the supply, t_1 that of the delivery, r the latent heat of evaporation of the

steam, T the temperature of the steam, n the delivery-head, n_1 the suction-head, $n + n_1$ the total head,—no allowance being made for variation,—we have

$$w(T + r - t_1) = W(t_1 - t).$$

The heat equivalent of the mechanical work done,

$$U = A[Wn_1 + (W + w)n].$$

The heat expended, in thermal units,

$$h = w(T - t + r).$$

The efficiency,

$$E = \frac{U}{h} = \frac{A[Wn_1 + (W + w)n]}{w(T - t + r)}.$$

Neglecting the work of lifting the condensed steam,

$$E = \frac{A(n_1 + n)}{t_1 - t}, \text{ nearly.}$$

The following form for data and results of test is used by the Massachusetts Institute of Technology:

447. Form for Data and Results of Test on Pulsometer.

No...... *Date*, ..., 189..

Number.	Time.	Flow of Steam.				Water.					Heads.				Calorimeter.			Counter	
		Boiler-pressure.	Orifice-pressure.	Pressure at Pulsometer.	Temp. at Pulsometer.	Depth on Weir in Ins.	(Depth on Weir)$^{\frac{3}{2}}$.	Temp. at Weir, Degrees F.	Temp. of Suction, Degrees F.	Temp. of Discharge, Degrees F.	Suction-gauge, Ins. of Hg.	Discharge-gauge, Lbs. per Sq. In.	Actual Suction, in Ft.	Actual Head, in Ft.	Boiler-pressure.	Calorimeter-pressure.	Temp., Degrees F.	Reading.	Difference.
Total																			
Av.																			
Cor.																			

Diameter suction and discharge pipes.....ins.
Transverse area of pipe.....sq. ft.
Distance between pressure-gauges.....ft.
Barometer (cor.) ... .ins.; .....lbs.
Number of pulses per minute.....
Width of weir. ... .ft. Area steam-orifice.....sq. ft.
Steam used in.....mins. .....lbs.
Water over weir in ... .mins. ....lbs.
Head due to velocity in discharge-pipe..... .....ft.
Total lift = pressure-heads + velocity-head + distance between gauges.....ft.
Total work done by pulsometer .....ft.-lbs.; .....E. T. U.
Total heat given up by steam.....B. T. U.
Efficiency.....per cent.
Duty (ft. lbs. per 1,000,000 B. T. U.).....

CHAPTER XXII.

THE STEAM-TURBINE.

448. General Principles of Operation.—The steam-turbine has come into extensive commercial use for the production of power during the last five years, and for that reason its theory and economic operation are matters of considerable importance.

The steam-turbine is defined by Neilson as a machine in which a rotary motion is obtained by the gradual change of momentum of the working fluid.

As constructed, the steam-turbine consists essentially of a rotating part carrying buckets against which the steam acts either by pressure or impulse or both, as with water-turbines as described on p. 316. The energy of the moving mass of steam is taken up by the rotating part and utilized to drive machinery.

Dry steam if expanded adiabatically, and without doing work on anything but itself, through a divergent nozzle or one which does not interfere with its lateral expansion, will convert all the energy disappearing into velocity. If Q represent the heat per pound of entering, q_1 that of the discharge steam, and $A = 778$, the velocity produced may be calculated from the formula

$$\frac{V^2}{2g} = A(Q - q).$$

As an example, for the condition in which the steam enters at an absolute pressure of 285 pounds and is discharged at 0.6 pounds absolute, the velocity of the steam calculated from the

preceding formula would be 4370 feet per second. The circumference of the rotating part should move about one half that of the current of the steam which impinges on it, if the steam act on a single row of buckets, in order that it may be discharged with the least velocity and consequently with the least energy, which is a condition of maximum efficiency. If, however, there are a number of rows of buckets on the moving part which alternate with rows of fixed buckets on the stationary part of such shape as to deflect the current of steam in a direction to propel the wheel at highest velocity, the circumference of the rotating part may move much slower than one half the velocity of the current of steam flowing at a rate which produces maximum efficiency.

The steam-turbines of all types show a greater gain due to superheated steam than does the ordinary steam-engine; the Parsons turbine showing an increase in efficiency of about 1 per cent, due to an increase of superheat of 8 or 9 degrees up to at least 200° superheat. For best results the steam-turbines also require a high vacuum, and the specifications for steam-turbine installations generally require a high vacuum and a considerable degree of superheat.

A large number of different types of steam-turbines * have been produced and many are in successful commercial use, but the limits of available space for this work permit the consideration of only two or three types in a brief manner.

449. Steam-turbine of the Impulse Type.—The De Laval steam-turbine is an example of the impulse type. In this turbine a single wheel carrying a row of buckets near its periphery is acted upon by one or more jets of steam which are conveyed to the wheel through one or more expanding nozzles. (See Fig. 304.) The wheel revolves in a case which is maintained at the pressure of the exhaust so that the steam expands very nearly adiabatically from the steam pressure to the exhaust pressure in the diverging nozzle, and before coming in contact with the

* See Steam-turbines by Prof. Carl Thomas. New York, John Wiley & Sons.

buckets of the wheel. This velocity frequently reaches 4000 feet per second.

The De Laval turbine, with steam entering at 4000 feet per second and with the nozzle set at an angle of 20° to the plane of

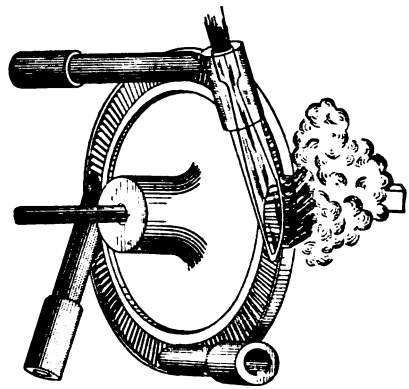

FIG. 304.—THE DE LAVAL TURBINE WHEEL AND NOZZLES.

motion of the buckets, should have theoretically a peripheral velocity for maximum efficiency equal to about 47 per cent of the velocity of the steam. The velocity of discharge for that condi-

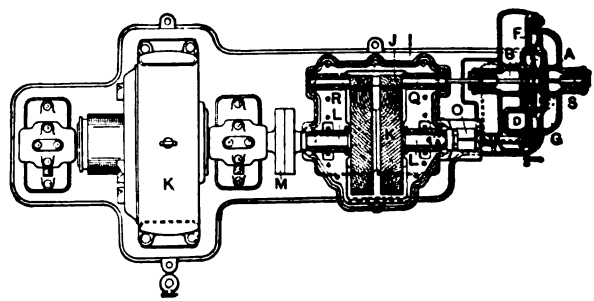

FIG. 305.—SECTIONAL PLAN OF THE DE LAVAL TURBINE GENERATOR.

tion it is claimed is 34 per cent of the initial velocity, and the energy absorbed by the turbine wheel is theoretically 88 per cent of that expended, making the steam consumption per theoretical horse-power 9.1 pounds per hour.

Theoretically the peripheral speed of the De Laval turbine for highest efficiency should be about 1880 feet per second, but practically it is generally operated at 1350 feet per second, for best results, giving a horse-power for a theoretical steam consumption of 9.8 pounds per hour. On account of the high velocity of the steam-wheel of the De Laval turbine, it is necessary in applying the power to use a reducing-gear to lessen the speed of rotation. The diagram Fig. 305 shows a plan, partly in section, of the De Laval turbine with the steam-wheel near A, the reducing-gear wheels J and L, and couplings at M, which may connect it to a generator or other machine which may be driven at a high rotative speed.

450. Steam-turbine of the Reaction Type.—The Parsons steam-turbine, shown in Fig. 307 in section, is an excellent illustration of a machine of the reaction type. In this turbine the rotating part consists of a steel drum which carries numerous rows of blades which move between stationary rows of blades supported by the casing surrounding the rotating part.

The general arrangement of the blades is shown in Fig. 306. The steam is deflected by the stationary blades, P, so as to strike

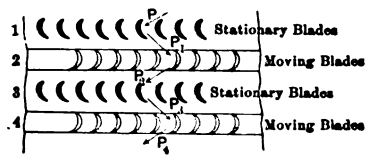

FIG. 306.—BLADES OF THE PARSONS TURBINE.

the moving blades, P_1, at the most effective angle, thence the steam is deflected to a row of stationary blades and thence again to a row of moving blades as shown by the arrows. Steam enters at A (Fig. 307) and passes in succession through the various rows of buckets on the parts F, G, H, and K. The last series of buckets are on an enlarged portion of the drum, O, which increases the volume and produces great expansion. From the rotating part it passes into the chamber, B, connected with the condenser.

To take the lateral thrust off the bearings, pistons or rotating collars, *P*, are arranged so as to receive the steam pressure and balance the thrust.

The turbine is provided with a governor, *L*, which acts to turn the steam entirely on or off as may be necessary to maintain constant speed.

The driving-shaft is extended for direct connection for an

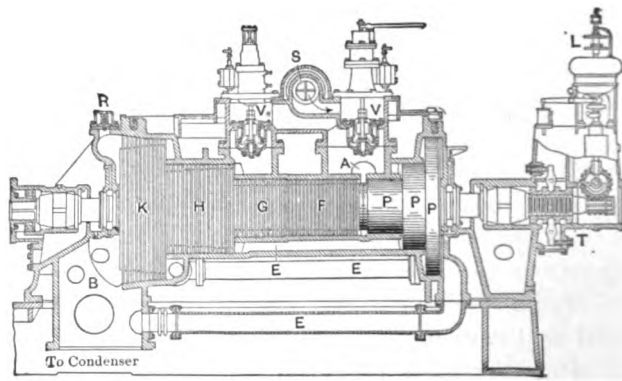

FIG. 307.—PARSONS STEAM-TURBINE.

electrical generator for which the power generated by the turbine is generally used. The Parsons' steam-turbine is built by the Westinghouse Machine Co. and by the Allis-Chalmers Co.

451. Steam-turbine of Combined Reaction and Impulse Type.—The Curtis turbine as built by the General Electric Co. is a good illustration of a combined impulse and reaction turbine.

In this turbine the steam passes through a set of nozzles arranged in multiple; it then strikes the first row of blades, after which it reacts on alternate rows of moving and stationary blades as in the Parsons turbine. The general arrangement of the buckets in this turbine appears in Fig. 308, which shows the valves connecting the steam-chest with the supply nozzles, the development of moving and stationary blades, and the nozzle diaphragm through which the steam flows against another set of moving blades on a wheel of larger diameter.

The number of stages may be made as great as necessary, there usually being four stages in large wheels.

The large-size Curtis turbines are made of vertical form with a generator above the turbine and carried on the same vertical shaft, being supported below by a rotating collar resting on oil or water under pressure. The general arrangement is shown in Fig. 309, the generator being at *G*, the turbine at *T*. The steam-pipe is connected at *S*, the exhaust-pipe at *E*.

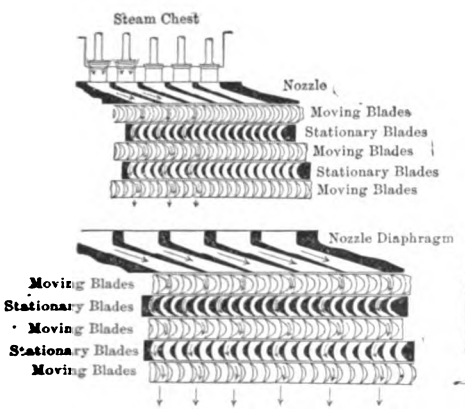

FIG. 308.—NOZZLES AND BUCKETS, CURTIS TURBINE.

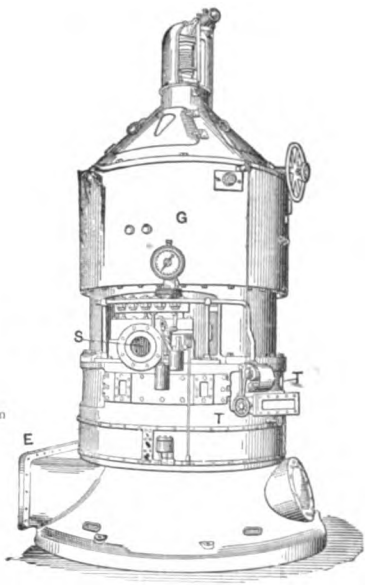

FIG. 309.—THE CURTIS TURBO-GENERATOR.

452. Testing of Steam-turbines.—Since there is a continuous flow of steam through the steam-turbine, at a uniform pressure and temperature for any one condition, there is no opportunity for taking a diagram similar to the indicator card, and consequently there is no means for measuring the mechanical work done by the entering steam on the rotating part.

There may be, however, if the construction warrants, an opportunity of measuring the temperature and pressure at the

various stages in a multiple-stage turbine, and these quantities if possible should be observed.

Most of the steam-turbines are constructed for direct connection to an electrical generator, and as usually built do not permit the attachment of intermediate thermometers and pressure-gauges. The test for that reason must generally consist in the measurement of the total steam and heat supplied and the work done by the generator. This latter is measured by means of various electrical instruments. If the efficiency of the generator is known, the work delivered (D.H.P.) from the turbine can be computed.

From the heat input and the electrical output measured as described the efficiency can be computed on the basis of delivered or electrical horse-power. The heat (B.T.U.) per electrical or delivered horse-power supplied per minute can also be computed. These quantities are usually sufficient for all commercial requirements and serve for a comparison of the results obtained with those of reciprocating engines, which are already well known from numerous tests.

453. **Log-sheets.**—A log-sheet which suggests quantities to be observed and results to be computed in the test of a steam-turbine directly connected to an electrical generator is printed on the following page. The input H.P. is computed by adding all generator losses, reduced to horse-power units, to the output H.P. computed from the K.W. The thermodynamic efficiency is the ratio of the difference of temperature of steam entering and discharging, divided by the absolute temperature of the entering steam. The thermal efficiency is the ratio of the work, expressed in thermal units, AW, to the total heat supplied, Q. A perfect engine is assumed to be one that converts the difference between the heat entering, Q, and that discharging, q, into work.

REPORT OF DIRECT-CONNECTED STEAM-TURBINE TEST.

Made by..... *Date*.....

Kind of Turbine..... *Mfg. by*.....

Duration of run.....Hours.....
Revolutions per minute.....
Temperature of condensing water cold.....
Temperature of condensing water warm.....
Temperature of condensed steam.....
Temperature of the engine-room.....
Steam-chest pressure-gauge.....
Barometer.....inches Hg.....
Condenser pressure..... " " .....
Boiling temp. Exh. pressure.....
Total steam per hr. condensed.....lbs.....
Total condensing water per hr..... " .....
Wt. condensing water per lb. steam..... " .....
Total heat supplied.....B.T.U.—Q.....
Total heat exhausted..... " —q.....
Volts.....
Amperes.....
Series-field heat loss.....
Shunt-field heat loss.....
Armature heat loss.....
Iron and friction loss.....
K.W. hrs. useful output.....
Total generator losses reduced to B.T.U.....
Total input—H.P. (Calculated from K.W.) output.....
Total D.H.P.....
Efficiency of the plant.....
Moisture in steam.....per cent.....
Steam per input H.P. hr. (wet)..... lbs.....
Steam per input H.P. hr. (dry)..... " .....
Steam per D.H.P. hr. (dry)..... " .....
Thermodynamic Eff.....$(T-T') \div T$.....
Thermal Eff.....$AW \div Q$.....
Steam per H.P. hr. of perfect engine (dry).....lbs.—$(Q-q) \div 2545$ ....
Ratio actual to theoretical water consumption.....
Heat supplied per minute.....B.T.U.....
Heat utilized per min..... " .....
Heat discharged per min..... " .....
Heat radiated per minute..... " .....

CHAPTER XXIII.

HOT-AIR AND GAS ENGINES.

454. Hot-air Engines.—Hot-air engines consist of engines in which the piston is driven backward and forward by the alternate expansion and contraction of a body of air caused by heating and cooling. Those now on the market are used prin-

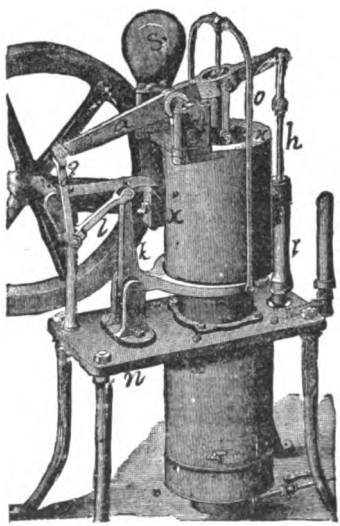

FIG. 311.

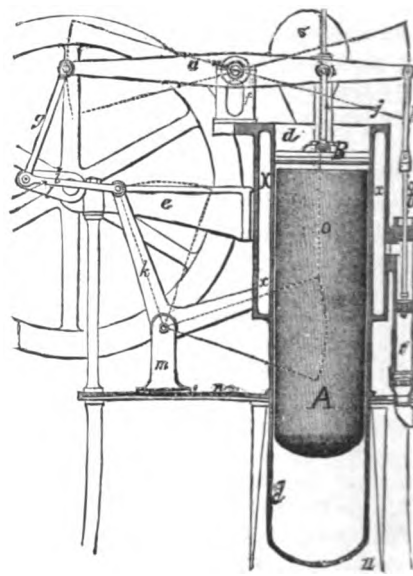

FIG. 312.

ERICSSON HOT-AIR PUMPING-ENGINE.

cipally for pumping-engines, and are arranged to use either coal or gas as fuel.

455. Ericsson Hot-air Engine.—This engine is shown in Fig. 311 in elevation, and in Fig. 312 in section.

The method of operation is as follows: There are two pistons, viz., *A*, the displacing piston or *plunger*, and *B*, the *driving-piston*. The driving-piston is connected to the mechanism as shown. The displacing-piston, *A*, is a vessel made of some non-conducting substance, and its office is to move a body of air alternately from the space above to that below it. As shown in the figure, the piston *A* is at the upper end of its stroke, and the piston *B* is moving rapidly upward, being driven by the expansion of the air in the lower part of the receiver *d*. The air in the upper part of the receiver is cooled by water which has been raised by the pump *r*, and which circulates in the annular space *xx*.

On the return stroke of the piston *B* the plunger *A* at first descends somewhat faster, and thus by transferring air maintains a nearly uniform pressure upon the piston. When the piston *B* reaches the position shown in Fig. 312 on its downward stroke, the plunger *A* will be at the bottom of its stroke, and all the working air will have been transferred above and its temperature maintained at its lower limit, while it is compressed by the completion of the downward stroke of the piston *B*, after which the plunger will rise to the position shown in the figure and the temperature and volume are both increased at nearly constant pressure. The mass of air in the engine remains constant.

456. The Rider Hot-air Engine.—In this engine the compression-piston *A* and the power-piston *C* work in separate cylinders, which are connected together by a rectangular passage *D* in which are placed a large number of thin metallic plates, forming the *regenerator*, whose office is to alternately abstract from and return to the air the heat in its passage backward and forward. The same air is used continuously; it may be admitted to the cylinders by a simple check-valve *O*, opening inward. The engine is used entirely as a pumping-engine, and the water so raised circulates around the compression-chamber *B*.

The operation of the engine is briefly as follows:

The compression-piston *A* first compresses the cold air in

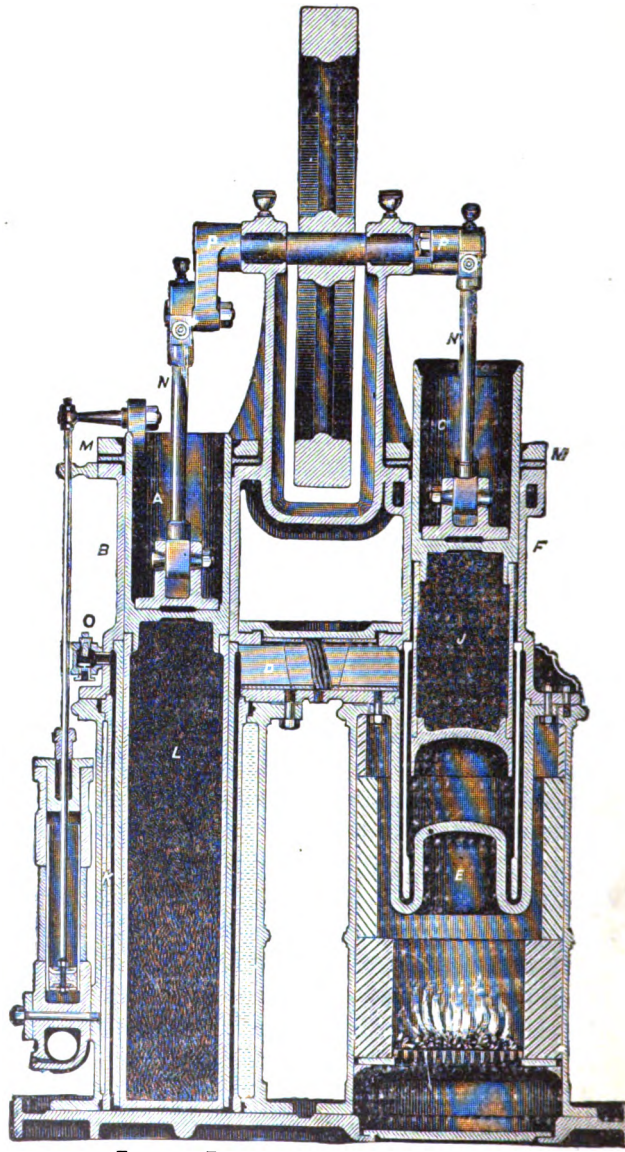

FIG. 313.—THE RIDER HOT-AIR PUMPING-ENGINE.

the lower part of the compression-cylinder B, when, by the advancing or upward motion of the power-piston C and the completion of the down stroke of the compression-piston A, the air is transferred from the compression-cylinder B through the regenerator D and into the heater E without appreciable change of volume. The result is a great increase of pressure, corresponding to the increase of temperature, and this impels the power-piston up to the end of its stroke. The pressure still remaining in the power-cylinder and reacting on the compression-piston A forces the latter upward till it reaches nearly to the top of its stroke, when, by the cooling of the charge of air, the pressure falls to its minimum, the power-piston descends, and the compression again begins. In the mean time, the heated air, in passing through the regenerator, has left the greater portion of its heat in the regenerator-plates to be picked up and utilized on the return of the air towards the heater.

457. Thermodynamic Theory. — The thermodynamic theory of the hot-air engine will be found fully discussed in Rankine's Steam-engine and in Wood's Thermodynamics, from which it is seen that these engines may work under the conditions of change of temperature with either constant pressure or constant volume, or under the condition of receiving and rejecting heat at constant pressure.

The thermodynamic efficiency is found by dividing the range of temperatures of the fluid by the absolute temperature of the heated fluid.

458. Method of Testing.—The method of testing hot-air engines does not differ essentially from that for the steam-engine. An indicator is to be attached so as to measure the pressures. Knowing the pressures and volumes, the corresponding temperatures can be computed from the formula

$$\frac{pv}{T} = R = 53.21,$$

in which p is the pressure in pounds per square foot, v the

corresponding volume in cubic feet, and T the absolute temperature. From this

$$T = \frac{pv}{R}.$$

The quantities which should be taken in each test are shown on the following blank for data and results:

459. Forms for Data and Results of Test of Hot-air Engine.

MECHANICAL LABORATORY, SIBLEY COLLEGE, CORNELL UNIVERSITY.

Test of.....Hot-air pumping-engine. Fuel.....

At..... By { .....

Date.....189.. { .....

LOG OF TRIAL.

Symbol.		h'	W	P	p				t	t'	t''		N		G		w
		Water.		Pressures.				Temperatures.				Revolutions.		Fuel.		Leakage	
Number.	Time.	Weir-reading.	Weight per Hour.	Pressure-gauge.	Suction-Gauge.	Gas.	M. E. P.	Room.	Water at Weir.	Jacket. Entering.	Jacket. Leaving.	Total per Counter.	Per Minute.	Total.	Per Hour.	Total.	Per Hour.

	Symbol.	Determination.		
		1	2	3
Head pumped against, feet	H			
Average head over weir	h			
Water delivered, cu. ft. per sec.	Q			
" " lbs. per hr.	Q'			
" " gals. per 24 hrs.	Q''			
" " per hr. plunger-displacement	Q'''			
Percentage slip	X			
Thermal units per lb. of fuel	k			
Average fuel-consumption per hour	G			
Heat from combustion per hour	B. T. U.			
Duty per weir	Duty			
Duty per plunger-displacement				
Average M. E. P.	M. E. P.			
" indicated H. P.	I. H. P.			
" effective "	D. H. P.			
Efficiency, mechanical	E			
Total efficiency	E'			
Expenditure of heat per hour				
Indicated work, B. T. U.				
Heating jacket-water				
Radiation, etc.				
Total.				

REMARKS.

.....

.....

The indicator-diagram obtained from the hot-air engine will depend largely on the principle of operation. The form of the

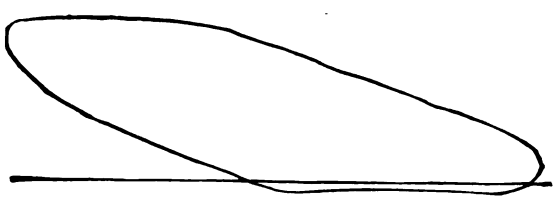

FIG. 314.—DIAGRAM FROM ERICSSON HOT-AIR ENGINE.

one obtained from the Ericsson engine in which there is change of temperature at constant pressure is well shown in Fig. 314.

SPECIAL DIRECTIONS FOR EFFICIENCY-TESTS OF THE RIDER AND THE ERICSSON ENGINE.

Rider Engine.

Apparatus.—Steam-engine indicator with 16-pound spring; thermometers; low-pressure gauge.

Operation.—Build a fire in the heater; fill the jacket with water by priming the pump; attach indicator; place gauge behind the delivery-valve, and thermometers to obtain temperatures of water in supply and discharge pipes; open delivery-valve and start engine by hand.

Make five half-hour runs, increasing the head five pounds each time, and taking data every five minutes. To stop the engine, open fire-door and blow-off cock.

Submit graphical log and plot efficiency-curve, using heads as ordinates and efficiencies as abscissæ.

Ericsson Engine.

Apparatus.—Indicator with 10-pound spring; low-pressure gauge.

Operation.—Light the gas under the heater; place pressure-gauge behind delivery-valve, and attach indicator; proceed with test and report as in efficiency-test of Rider compression-engine, beginning with a head of five pounds and increasing by five pounds up to twenty-five pounds.

460. The Gas-engine.—The gas-engine is in many respects similar to a hot-air engine in which the furnace is included in the working-cylinder.

There are many types of these engines now constructed, differing from each other in form, in methods of igniting the gas, and in the number of strokes required to complete a cycle of operations. In all these engines a mixture of gas and air, in such proportions as to be readily exploded, is drawn into the cylinder; this is then exploded by firing either with an electric spark or with a lighted gas-taper, after which the piston is impelled rapidly forward, and the gas expanded; the burned ga-

is then expelled from the cylinder before the introduction of a new charge.

Gas-engines are usually single-acting, but a few have been made that were double-acting like a steam-engine.

Dugald Clerk makes the following classification of gas-engines:*

A. Engines igniting at constant volume but without previous compression, and of which the working cycle consists in—

1. Charging the cylinder with explosive mixture.
2. Exploding the charge.
3. Expanding after explosion.
4. Expelling the burned gases.

Many of the early engines were of this type, of which may be mentioned those of Lenoir, Hugon, and Bisschof.

A type of gas-engine in which the cycle is changed a little from that given was successfully introduced by Otto and Langen in 1866. In this engine the piston is shot forward by the force of the explosion in a long cylinder, while disconnected from the motor-shaft, but on the return stroke it engages with the motor-shaft and completely expels the burned gases.

The cycle is as follows:

1. Charging the cylinder.
2. Exploding the charge.
3. Expanding after explosion while disconnected from the motor.
4. Compressing the burned gases after some cooling.
5. Expelling the burned gas. Work is done only on the return stroke.

B. Engines igniting at constant pressure with previous compression, and of which the working cycle consists—

1. Charging the pump-cylinder with the explosive mixture.
2. Compressing the charge into an intermediate receiver.
3. Admitting the charge to the motor-cylinder in the state of flame, at the pressure of compression.

* The Gas-Engine, Dugald Clerk; N. Y., J. Wiley & Sons.

4. Expanding after admission.
5. Expelling the burned gases.

To carry out this process perfectly the following conditions are required:

(*a*) No throttling or heating from the air during admission to the pump.

(*b*) No loss of heat of compression to the pump and receiver-walls.

(*c*) No throttling as the charge enters the motor-cylinder or the receiver.

(*d*) No loss of heat to the iron of the motor-cylinder.

(*e*) No back pressure during the exhaust-stroke.

The most successful engines of this type are Brayton's and Diesel's.

C. Engines igniting at constant volume with previous compression, of which the usual cycle of operations is—

1. Charging the motor-cylinder with the explosive mixture.
2. Compressing the charge in the motor-cylinder.
3. Igniting the charge after admission to the motor.
4. Expanding the hot gases after ignition.
5. Expelling the burned gases.

To carry out this process perfectly the gases should not be heated until ignition, and they should not lose heat to the cylinder-walls during expansion; these are conditions in a measure contradictory and impossible to fulfil completely. The most successful engines now in use belong to this class, which is commonly known as the "four-stroke-cycle type," as it requires four strokes for each cycle of operation; it was first proposed by Beau de Rochas in 1860 and first practically applied by Otto in 1874. A modified form of the above type, known as the "two-stroke-cycle engine," requires but two strokes for the cycle of operation, the events taking place in the following order: 1 (out-stroke): Ignition; expansion; commencement of exhaust. 2 (in-stroke): Completion of exhaust simultaneous with charging; compression.

Compression engines were patented by Barnett in 1838 and by Million in 1840 with a different cycle from that described.

Gas suitable for use in gas-engines is manufactured in a variety of ways and from a considerable number of substances. A mixture of hydro-carbon vapor and air is obtained by volatilizing some of the light hydro-carbon oils.

The following table gives the composition and heating value of several different kinds of gases:

COMPOSITION AND HEATING VALUE OF GASES.

	Natural Gas. (Pa.)	Coal Gas.		Water Gas.		Producer Gas.	
		A.	B.	Enriched.	Normal.	Anthracite.	Bituminous.
CO, per cent....	0.50	8.18	6.00	23 6	45.00	27.0	27.0
H, "	2.18	46.2	46.0	35.9	45.0	12.0	12.0
CH_4, "	92.6	34.0	40.0	20.9	2.0	1.2	2.5
C_2H_4, "	0.31	3.76	4.0	12.8	.....	.....	0.4
CO_2, "	0.26	8.88	0.5	0.3	4.0	2.5	2.5
N, "	3.61	2.15	1.5	3.9	2.0	57.0	56.2
O, "	0.24	0.65	0.5	0.01	0.5	0.3	0.3
Vapor, "	.....	1.5	.....	1.5			
Weight per 100 cu. ft., lbs....	4.56	3.2	3.2	4.6	4.56	6.56	6.59
B.T.U. per cu.ft.	1100	577	735	688	322	137	157
B.T.U. per lb...	24150	17900	23100	14900	7120	2100	2385

Ignition in gas-engines is made to take place very nearly at the time of greatest compression. The various methods in use are (1) the open flame, (2) the hot tube, and (3) electric ignition of the contact and jump-spark variety. The ignition with open flame is accomplished by an auxiliary gas-jet which is constantly kept burning in a chamber adjacent to the cylinder, and which is put in alternate communication at suitable intervals with the atmospheric air and with the cylinder by means of a valve actuated by the engine. This method was used on the Barnett and the early Otto engines, but is seldom employed at the present time.

The ignition with the hot tube is performed by connecting a closed tube, which is kept hot by an external flame, to the cylinder in such a manner that it will be filled during compression by the charge in the clearance. The charge is

fired by the heat communicated through the tube. Fig. 315 illustrates the usual arrangement of a hot-tube ignition device. In this figure *A* is the cylinder, *H* the tube, *G* a gas-jet which plays around the tube *H*, discharging the products of combustion at *B*. In some constructions communication between the hot tube and the cylinder is closed by a valve except at the time of ignition.

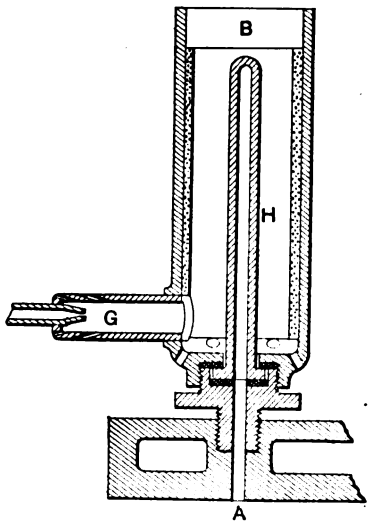

FIG. 315.—IGNITION BY THE HOT TUBE.

Electric ignition is of two kinds: the contact method, in which two terminals connected through a battery and spark coil are brought into contact within the cylinder and separated rapidly, causing a bright spark by the self-induction of the coil. One form of this method of ignition is shown in Fig. 315*a*, in which the igniter terminal, *a*, is an arm mounted on a shaft, *b*, and

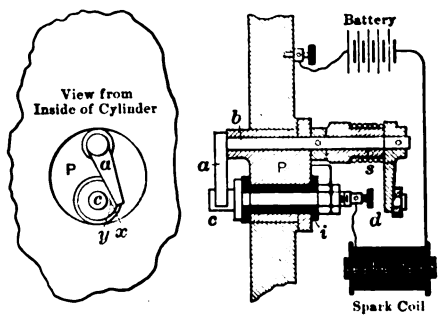

FIG. 315*a*.—WIPE-SPARK IGNITION.

arranged to be worked by a suitable cam rod attached to the outer crank *d*. The terminal, *e*, is stationary and insulated from the cylinder-wall. The two terminals may be mounted

in a removable plug *P*. The extremities of the terminals should be of some metal, as platinum, that will resist the action of the electric current. Other forms of this method of ignition have a rubbing motion of the terminals before ignition.

The other electric-ignition arrangement is illustrated

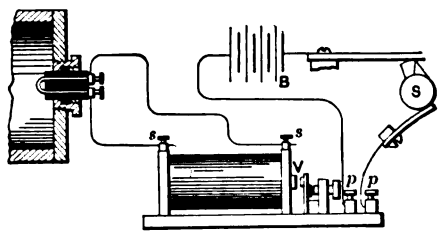

FIG. 316.—JUMP-SPARK IGNITION.

by Fig. 316. Both igniter terminals are stationary and mounted in a plug of insulating material, usually porcelain or lava. These are connected to the secondary terminals, *s*, *s*, of an induction-coil. The primary circuit of this coil is connected to a battery, *B*, at the proper moment by a contact cam on the secondary shaft, *S*.

The primary circuit of the coil includes a vibrator, *V*, in many cases. With this arrangement a succession of sparks passes between the igniter terminals while the circuit-closing cam is in contact with its brush. In some cases, however, the vibrator is omitted, the circuit being broken only once, at the cam contact.

The cut, Fig. 317, shows the construction of a recently designed four-stroke-cycle engine for gas or hydro-carbon vapor. In this engine, which is shown in section, the gas and air enter, through separate inlets, the mixing-chamber *M*, from which the mixture flows through the port *N* and inlet-valve *J* into the cylinder as the piston is beginning a downward stroke at the commencement of a cycle of operation. The inlet-valve is opened once in two revolutions by the motion of the cam *B*, which makes one half as many revo-

lutions as that of the main shaft of the engine. The charge is then drawn into the cylinder by suction. During the up-

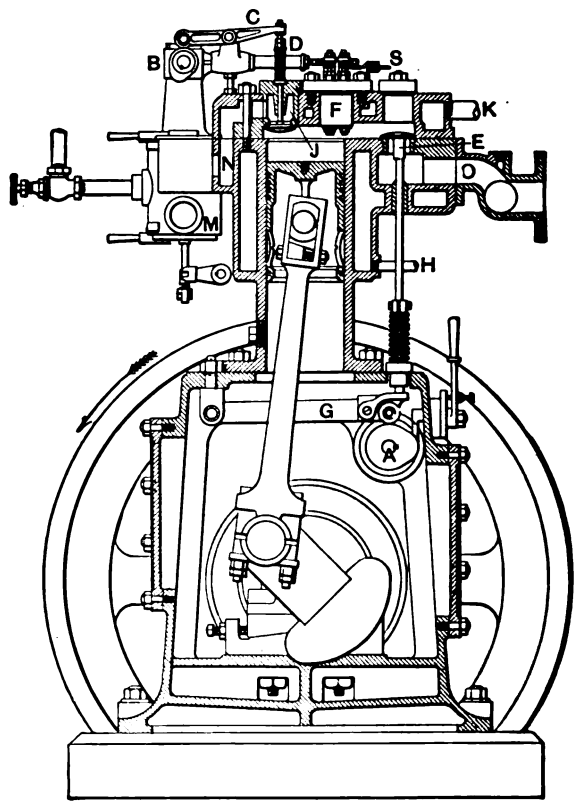

FIG. 317.—SECTION THROUGH WESTINGHOUSE ENGINE.

stroke of the piston, the charge of gas and air is compressed in the cylinder. The charge is ignited by an electrical spark at about the time the compression is maximum and when both inlet- and exhaust-valves are closed. The ignition is performed by an igniter-cam arranged so as to bring two igniter-terminals into contact, completing the electric circuit, and then suddenly separating them by the energy in a coiled

spring located in the guide *D*. The rise of pressure following ignition drives the piston downward to the end of its stroke.

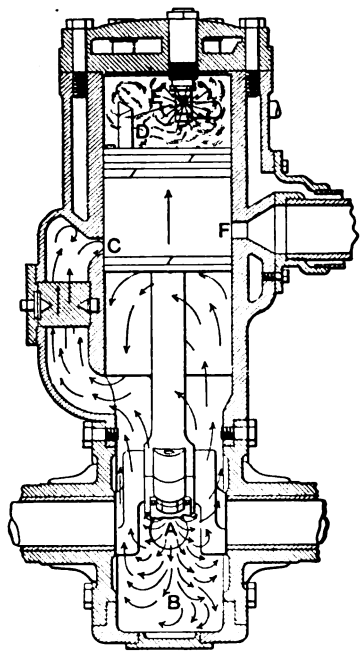

FIG. 318.—SECTION OF LOZIER ENGINE.

On its return-stroke the exhaust-cam *A* opens the exhaust-valve *E* and the burned gases are expelled by the rising piston into the exhaust-pipe *O*. One cycle of operation is then complete and requires, as thus described, four strokes of the piston or two revolutions of the engine.

For the purpose of cooling, a jacket is provided through which water is made to circulate, entering at *H* and discharging at *K*. In the engine above described the speed is regulated by a governor, not shown in the cut, which throttles the mixture of gas and air.

A two-stroke-cycle engine is shown in Fig. 318, in which the cycle of operation is completed in two strokes or one revo-

lution of the engine, although the number of operations is the same as in the case of the four-stroke cycle. In the engine as shown in the figure, the mixed charge of gas and air is drawn into a chamber in the crank-case through the opening A, and is prevented from going backward by a check-valve opening inward which is located on the pipe supplying the charge. No valve other than the piston is employed to control either the admission- or the exhaust-port. The admission-port is in the lower part of the cylinder, at C, the exhaust-port is at the opposite side of the cylinder, at F. The charge enters when the piston is at the lower portion of its stroke through the open admission-port, due to the compression produced by the downward motion of the piston on the contents of the crank-chamber; at the same instant the burned gases are being exhausted through the open exhaust-port. On the return-stroke the fresh charge is compressed from the time the piston has covered the exhaust-port until the end of the stroke. The ignition is performed at about the time of greatest compression. We note that in this cycle of operation admission and exhaust take place simultaneously at the beginning of the upward stroke, and compression during the completion of the stroke; ignition takes place at or near the beginning of the downward stroke, expansion during the downward stroke, and beginning of exhaust near the end of this stroke. The advantages of this cycle of operation are claimed to be a greater number of impulses per revolution and a steadier motion for engines of the same weight. The disadvantages are the uncertainty of a clean cylinder for the explosion and the probable loss of unburned gases in the exhaust. Actual tests show that the two-stroke-cycle engines are much less economical than those of the four-stroke-cycle type and fully as heavy per unit of power.

A light hydrocarbon oil, termed gasoline, is readily vaporized by contact with air, in which case it forms a combustible gas suitable for use in gas-engines. The gasoline is

vaporized and mixed with air, by a device called a *carburetter*, previous to its introduction into the engine cylinder. Engines designed for the use of gasolene are sometimes called "gasolene-engines," but they do not differ in any essential way from those designed for gas. The carburetter is always external to and independent of the engine, and is equivalent to a gas-machine in its results. Gasolene is the principal source of fuel for all portable or automobile motors, for which it is excellently suited, because of its great heating value per unit of volume and because of its easy volatilization in the carburetter without heat. Carburetters are designed in various forms, but in all cases they provide means for passing the entering air over the necessary amount of gasolene while in a finely divided state. The regulation is frequently accomplished automatically by a float or other device.

461. Oil-engines.—This name is appropriately applied to engines designed to use as a fuel the heavy petroleum oils which are not readily vaporized. These engines are internal-combustion motors, which differ from gas-engines principally in the fuel employed and in the means required for vaporizing and ignition of the same. They may be either of the two-stroke or four-stroke cycle type, but usually are of the latter.

The first oil-engines used flame ignition, but those now built are ignited wholly or in part by the heat of compression aided by a hot tube, hot surface, or electric spark. The oil-engines are generally of the class which ignite at constant volume and during increase of pressure and temperature, the charge having been previously compressed. Prominent exceptions are the Brayton, which is not now built, and the Diesel. The Brayton ignites from a constantly burning flame at constant pressure during increase of volume and temperature. The Diesel ignites from the heat of compression at constant temperature during increase of volume and decrease of pressure. Oil-engines, it is noted, may be divided into three classes, igniting, respectively, (1) at constant volume, (2) at constant pressure, (3) at constant temperature.

In the Brayton the oil is sprayed directly into the cylinder during ignition, which takes place for a portion of the forward stroke. At the same time compressed air is supplied by a compressor, so as to maintain constant pressure in the working cylinder. The speed is regulated by a governor which controls the admission-valve for air and oil. The diagram from this engine is much like one from a Corliss steam-engine.

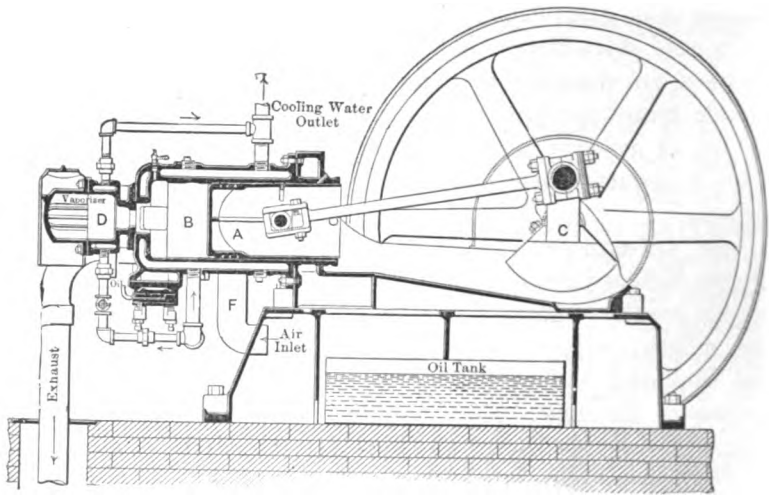

FIG. 319.—THE HORNSBY-AKROYD OIL-ENGINE.

In the Priestman oil-engine there is an external vaporizer heated externally by the exhaust gases, and through which the entire charge of oil and air for combustion pass on the way to the engine.

In the Hornsby-Akroyd engine, shown in Fig. 319, the oil-charge is pumped into a chamber connected to the working cylinder, where it is vaporized by the heat. The air is drawn into the cylinder through a separate inlet-valve and forced by the compression into contact with the oil-vapor, causing ignition. The Priestman and the Hornsby-Akroyd in other respects resembles the Otto gas-engine.

462. Theoretical Relations of Pressure, Volume, and Temperature of a Gas.—The relations of pressure, p, volume, v, and temperature, t, of a unit of weight of a perfect gas during expansion or compression may be expressed by the following equations, in which T = absolute temperature, α = coefficient of expansion per degree of absolute temperature, a = number of degrees between freezing-point and absolute zero, p_0 = pressure at o°, v_0 = volume at o° of one unit of weight of the gas, and R = constant $= p_0 v_0 \alpha = p_0 v_0 / a$.

From Boyle's and Gay-Lussac's laws we have

$$pv = p_0 v_0 (1 + \alpha t); \quad \ldots \ldots \ldots \quad (1)$$

$$pv = \frac{p_0 v_0}{a} T = \frac{p_0 v_0}{a}(a + t) = R(a + t) = RT. \quad \ldots \quad (2)$$

$pv = RT$ may be considered the characteristic equation of a perfect gas since it shows the relations, during expansion or compression, of a unit weight between the pressure, volume, and absolute temperature. R is a constant dependent on the nature of the gas, with values as follows for a few of the gases:

	Values of R.	
	English Units.	Metric Units.
Hydrogen (H).....	770.3	422.68
Oxygen (O).....	48.74	26.475
Carbon dioxide (CO_2).....	35.41	19.43
Air.....	53.22	29.20

Expansion and compression may take place (1) *isothermally*, in which case there is no change of temperature, or (2) *adiabatically*, in which case there is no increase or decrease in the total heat. For the first case, since the temperature remains constant,

$$pv = p'v'. \quad \ldots \ldots \ldots \quad (3)$$

The curve corresponding to this equation is an equilateral hyperbola asymptotic to the axes of volume and pressure. Methods

of drawing this curve have already been given in Art. 404, pages 554 and 555.

For the second case, or *adiabatic* expansion or compression,

$$\log \frac{p}{p_0} = \log\left(\frac{v}{v_0}\right)^k,$$

from which

$$p_0 v_0^k = p v^k = \text{a constant}, \quad \ldots\ldots \quad (4)$$

in which $k = c_p/c_v$. c_p = specific heat at constant pressure and c = specific heat at constant volume.

During adiabatic expansion the relations of temperature and volume are shown by the following equation:

$$\left(\frac{v}{v'}\right)^{k-1} = \frac{T_1}{T}. \quad \ldots\ldots\ldots \quad (5)$$

The relation of pressure and temperature by

$$T p^{\frac{1-k}{k}} = T_1 p_1^{\frac{1-k}{k}}. \quad \ldots\ldots\ldots \quad (6)$$

The following table (see next page) from Clausius (Mechanical Theory of Heat) gives the value of the two specific heats for a few of the gases.

The adiabatic curve may be drawn when p_0, v_0, and k are known by assuming values of v and calculating, either with a table of logarithms or a slide-rule, corresponding values of p.

The *mechanical work*, W, done during isothermal expansion between the volumes v_2 and v_1 is theoretically as follows:

$$W = \int p dv = p_1 v_1 \int_{v_1}^{v_2} \frac{dv}{v} = p_1 v_1 \log_e \frac{v_2}{v_1}. \quad \ldots \quad (7)$$

The work done during adiabatic expansion from v_2 to v_1 is as follows:

$$W = \frac{p_1 v_1}{k-1}\left\{1 - \left(\frac{v_1}{v_2}\right)^{k-1}\right\}. \quad \ldots\ldots \quad (8)$$

Name of Gas.	Symbol.	Specific Heat.		$\frac{c_p}{c_v}$
		Constant Pressure. c_p	Constant Values. c_v	k
Air		0.2375	0.1684	1.406
Oxygen	O	0.2175	0.1551	1.403
Nitrogen	N	0.2438	0.1727	1.416
Hydrogen	H	3.4090	2.4110	1.414
Nitric oxide	NO	0.2317	0.1652	1.402
Carbonic oxide	CO	0.2450	0.1736	1.413
Carbon dioxide	CO_2	0.2169	0.1720	1.261
Steam	H_2O	0.4805	0.3700	1.298
Disulphide carbon	CS_2	0.1569	0.1310	1.198
Olefiant gas	C_2H_4	0.4040	0.3590	1.125
Ammonia	NH_3	0.5084	0.3910	1.300
Alcohol	C_2H_6O	0.4534	0.4100	1.150

The *heat applied* during isothermal expansion or received during isothermal compression is given by the following equation:

$$Q=(c_p-c_v)T_1\int_{v_1}^{v_2}\frac{dv}{v}=(c_p-c_v)T_1\log_e\frac{v_2}{v_1},$$

or

$$Q=ART_1\log_e\frac{v_2}{v_1}=Ap_1v_1\log_e\frac{v_2}{v_1}. \quad . \quad . \quad . \quad . \quad . \quad (9)$$

The complete derivation of these equations can be found in any work on thermodynamics; they are given here merely for convenience.

463. Cycle of Operation of Gas-engines.—A body is said to operate in a *closed cycle* when it returns to its original state after passing through a series of physical and chemical changes. When a change of composition occurs, as is the case during combustion in the internal-combustion engine, the body may return to its initial condition only so far as pressure and volume are concerned and not in other respects. For this reason the gas-engine operates in a cycle which is only approximately closed.

If Q=heat received, q that exhausted. the highest possible

maximum efficiency would be for that condition $(Q-q)/Q$, which ratio has been called by A. Witz the "coefficient of economy."

The *Carnot cycle* is an ideal one which differs materially from any actual cycle of the gas-engine, yet it is useful as a basis of comparison, since it represents the maximum return in work for a given fall of temperature. In this cycle there is isothermal and adiabatic expansion followed by isothermal and adiabatic compression. For this case it can be shown that

$$\frac{Q-q}{Q}=\frac{T-T'}{T},$$

in which T is the absolute temperature during the isothermal expansion and T' that during isothermal compression.

The thermal efficiency may be calculated from the I. H. P. by dividing the mechanical work shown by the indicator diagram, expressed in heat-units, by the heat value of the fuel consumed It may also be expressed as the ratio of the delivered work in heat units to the heat value of the fuel. Thus if W = the mechanical work delivered, IW the mechanical work shown by the indicator diagram, then will the efficiency be as follows:

$$\text{Thermal from I. H. P.} = IW/Q;$$

$$\text{Thermal from D. H. P.} = W/Q.$$

464. Method of Testing Gas- or Oil-engines.—The method of testing gas- and oil-engines is essentially the same, the difference being principally due to the different methods of measuring the gaseous and liquid fuel. The object of the test in every case is to find the relation of the work performed to the thermal value of the fuel supplied, and the efficiency of the engine.

To obtain these results the amount of air should be ascertained. This may be computed approximately by subtracting the volume occupied by the fuel from the cylinder displacement, but it is desirable whenever possible to meter or measure the entering air.

In attaching the indicator it will be found necessary to use

a heavy spring in order to resist the effect of the explosion. This spring, because of its stiffness, will show but little work on the intermediate strokes; for this reason it is advisable to use a second indicator with a light spring, in which is placed a stop for the piston so that the spring cannot be compressed to such an extent as to injure it. A pyrometer should be inserted in the exhaust, and a gas-bag placed between the gas-meter and

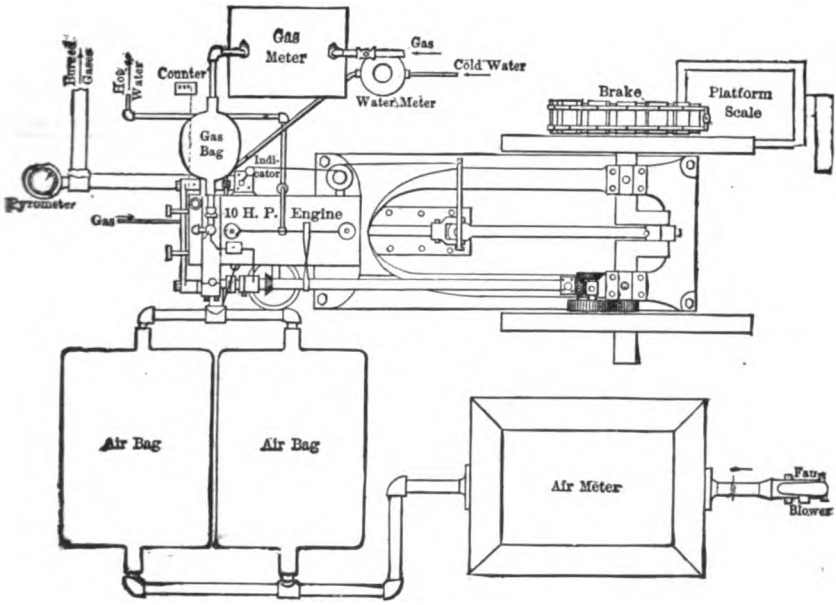

FIG. 320.—PLAN OF ARRANGEMENT FOR GAS-ENGINE TRIAL.

the engine. The proper arrangement of a gas-engine for trial is shown in Fig. 320, from Thurston's Engine and Boiler Trials.

The heat-units per cubic foot of gas used should be determined by a calorimetric experiment (see page 451). The actual and ideal indicator-diagrams are shown in Fig. 321, the difference being in great part due to losses of heat in the cylinder.

The report of the test should contain a description of the engine, the method of testing, together with the log and the re-

sults properly tabulated. In connection with the test of a gas-engine, plot a curve with cubic feet of gas per I. H. P. at 32° F. and atmospheric pressure as ordinates, and I. H. P. as abscissæ.

In the test of gasoline- or oil-engines, plot a similar curve, using the weight of fuel instead of the volume of gas.

Also plot a curve showing the relation of the total B. T. U. in the fuel supplied to the total I. H. P. and D. H. P. of the engine.

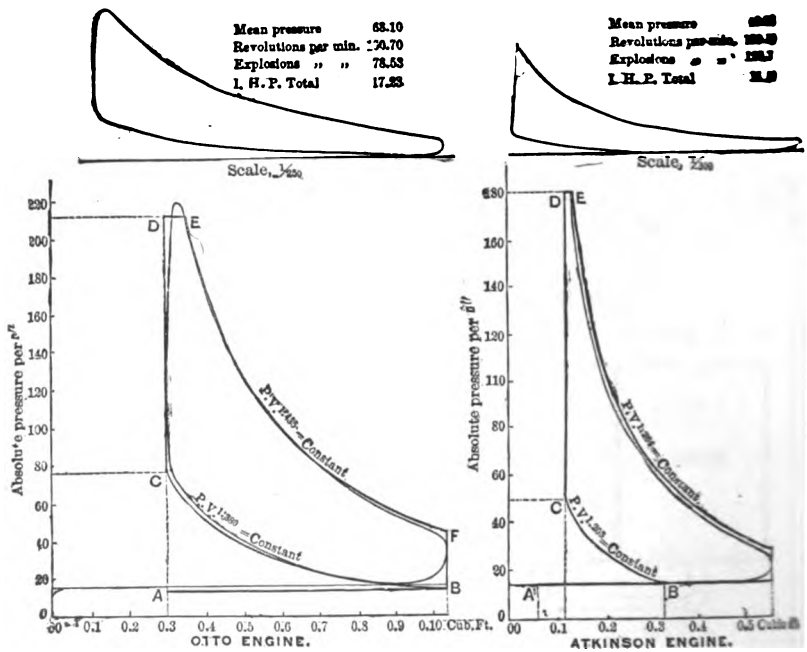

FIG. 321.—ACTUAL AND IDEAL INDICATOR-DIAGRAMS FROM GAS-ENGINES.

In case the air cannot be directly measured it may be approximately computed in the case of the oil-engine by obtaining the ratio of the weight of oil to the weight of air required for the cylinder displacement.

In the test of the engine the temperature of the exhaust gases is obtained which is less than the temperature during the exhaust stroke existing in the cylinders. The amount of this

difference is now known. Assume that it is 50° and compute from the theoretical formula which gives relation of p, v, and T, Art. 462, the temperature at the beginning and end of the stroke.

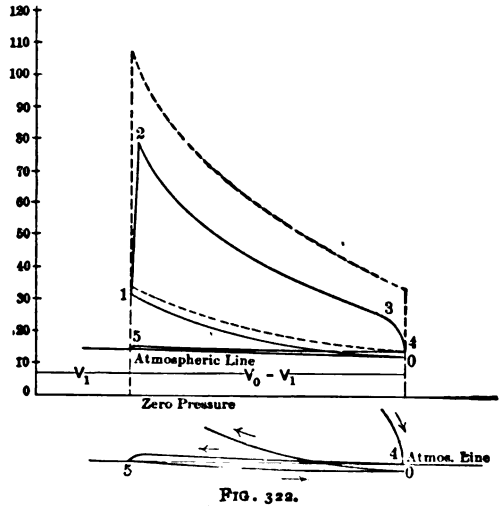

FIG. 322.

465. Data and Results of Test.—The following form gives the data and results of test for a gas-engine.

In case of the test of an oil-engine the items relating to the weight, volume, and thermal value of gas are to be changed for the corresponding items respecting the weight, volume, and thermal value of the oil which is employed as a fuel.

Fig. 322 shows in heavy lines the actual indicator-diagram from a four-cycle gas- or oil-engine; the work done during the exhaust and charging strokes is shown to a large scale in the lower part of the figure. The dotted line shows the theoretical diagram for the same conditions.

Data and Results of Test of.....*Gas Engine*

By.....190

Object of Test.....

DIMENSIONS OF ENGINE.

Rated H.P. at .....R.P.M.=
Diameter of piston.....In.
Area of piston.....Sq. in.
Length of stroke.....Ft.
Piston displacement.....Cu. ft.
Clearance.....Cu. ft.
" .....Per cent
Diameter piston-rod .....In.
" crank-pin.....In.
Scale of indicator spring.....Lbs. per in.

DATA.

Run No.	I	II	III	IV
Duration trial, hrs				
Brake load, net lbs.				
Gas, total cu. ft.				
*Gas per hour, cu. ft.				
Air, total cu. ft.				
*Air per hour, cu. ft.				
Ratio air to gas by weight				
Jacket-water, total lbs.				
" per hour, lbs.				
" temp. entering, F°.				
" " leaving, F°.				
" range, F°.				
Revolutions, total				
" per hour.				
" per min.				
Cycles, per min.				
Explosions, total				
" per hour.				
" per min.				
Ratio of explosions to cycles				
Temperature, exhaust, F°				
" room, F°.				
" range.				
*Gas, wt. of a cu. ft., lbs.				
*Air, wt. of a cu. ft., lbs.				
*Mixture, wt. of a cu. ft., lbs.				
Specific heat, gas.				
" air				
" exhaust gases.				
*Thermal equiv., cu. ft. gas, B.T.U.				

* At 32° F. and 14.7 lbs. absolute pressure per sq. in.

RESULTS.

Run No.	I	II	III	IV
INDICATOR.				
Maximum press, lbs. sq. in.				
Compression press, lbs. sq. in.				
M.E.P. power stroke				
" comp. "				
I.H.P. net				
D.H.P.				
Friction horse-power				
Mechanical efficiency, per cent.				
Weight of gas per hr., lbs.				
Weight of air per hr., lbs.				
*Gas per I.H.P., per hr., cu. ft				
" " " " lbs.				
" " D.H.P., " cu. ft.				
" " " " lbs.				
HEAT PER HOUR.				
Supplied ..... B.T.U.				
" ..... Per cent				
Absorbed by jacket-water ..... B.T.U				
" " " ..... Per cent				
Exhausted ..... B.T.U.				
" ..... Per cent				
Thermal equiv. Ind. work ..... B.T.U.				
" " " " ..... Per cent				
Radiation and loss ..... B.T.U.				
" " " ..... Per cent				
Thermal units per I.H.P. per hr.				
" " " D.H.P. " "				
EFFICIENCIES, PER CENT.				
Possible thermal $= \frac{Q-q}{Q}$				
Thermal from I.H.P.				
" " D.H.P.				
Carnot $= \frac{T_{max} - T_{min}}{T_{max}}$				

*At 32° F. and 14.7 lbs. absolute pressure per sq. in.

CHAPTER XXIV.

AIR-COMPRESSORS.

466. Types of Compressors.— Compressed air is used extensively in the various mechanical arts for the purposes of ventilation, operation of motors, tools, the transmission of energy, and refrigeration. There are three types of air-compressors, viz.: (1) the piston, (2) the rotary, and (3) the centrifugal blower or fan. They may be driven by any convenient motive power, as, for instance, a steam-engine, as shown in Fig. 325, a water-wheel, an electric motor, etc.

467. Piston Air-compressor. — In this machine the air is compressed by a piston moving in a cylinder which is provided with inlet- and exit-valves. The valves are commonly operated automatically by the entering or discharging air, but in some cases they are positively operated by mechanical means. A section of an air-compressor cylinder with automatically operated valves of the poppet-type is shown in Figs. 323 and 324. In Fig. 323 the inlet-valves are shown in the cylinder walls, in Fig. 324 they are shown in the piston, which communicates with the air by the hollow inlet-pipe, *E*.

The air may be compressed in one or more cylinders through which it is passed in succession. When the compressor has one cylinder only, it is described as a *one-stage* or simple compressor; when two cylinders, as a compound or *two-stage* compressor; when three cylinders, as a *three-stage* compressor, etc.

A section of a *two-stage* compressor with mechanically operated inlet-valves, driven by a direct-connected steam-engine, is shown in Fig. 325. The air is first drawn into the large

cylinder, *C*, compressed to an intermediate pressure, after which it is delivered into the intercooler, *B*, thence to the small cylinder, *C*, when the compression is completed.

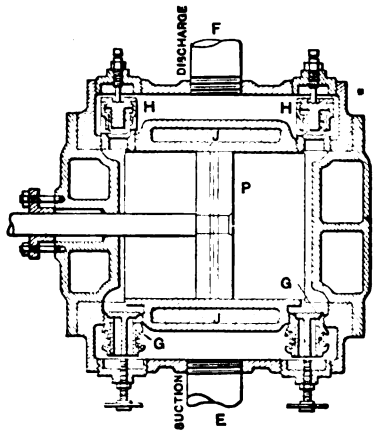

FIG. 323.—AIR-COMPRESSOR CYLINDER.

To remove the heat generated during compression, the cylinders are usually jacketed with water, and in multiple-stage compressors the air is further reduced in temperature by passing

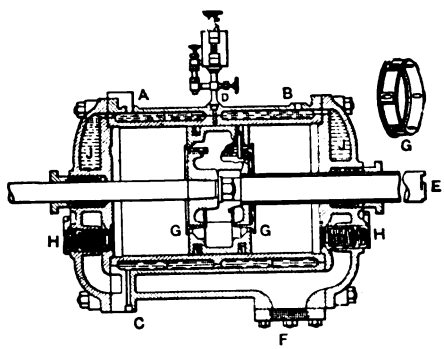

FIG. 324.—THE INGERSOLL AIR-COMPRESSOR.

through a vessel called an *intercooler*, which is located between the cylinders, and through which water is made to circulate in numerous small pipes.

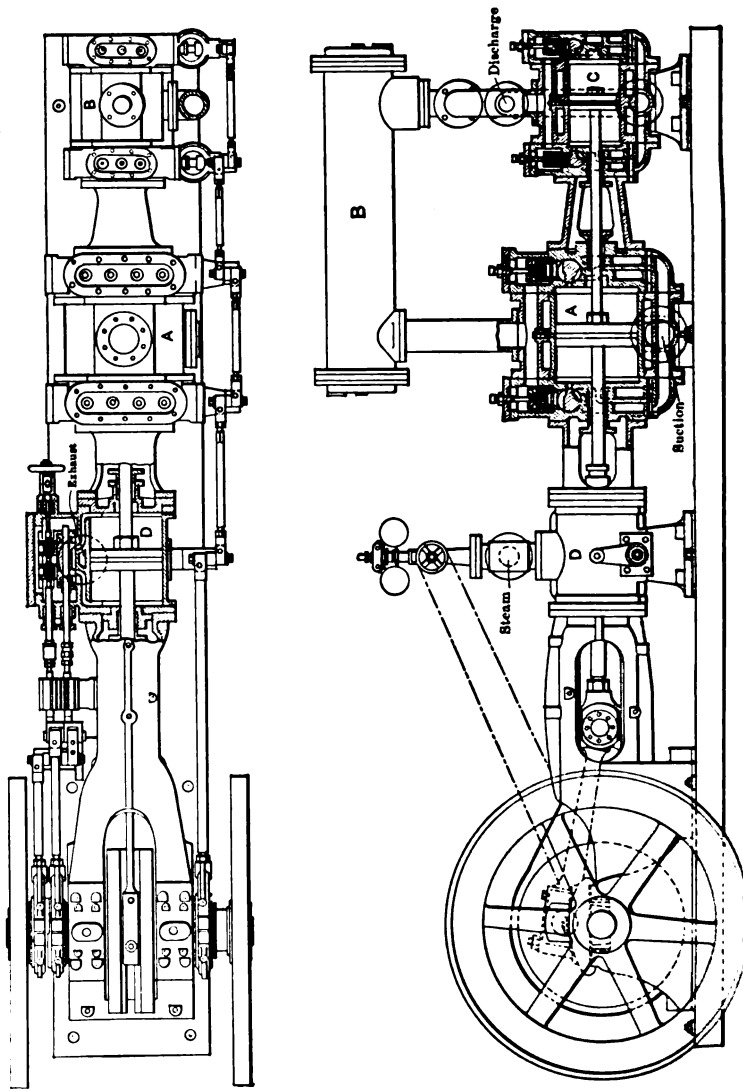

FIG. 139. TWO-STAGE AIR COMPRESSOR WITH INTERCOOLER.

Water-jacket cooling is very inefficient, and for that reason water is sometimes sprayed directly into the cylinder. This method of cooling is objectionable because of the moisture added to the air which may be converted into steam by the heat of compression.

The clearance space in the air-compressor cylinders should be as small as possible, since this will be filled during the forward stroke with compressed air at full pressure, which will expand to atmospheric pressure on the return stroke of the piston, and thus reduce the space available for the entering charge.

Air-cooling is sometimes employed for removing the extra heat where the compressor cylinders are exposed to a draught of air, as, for instance, those used on locomotives for operating the air-brakes.

Piston air-compressors are employed when high air pressures are required, but in some cases are used for low pressures, as, for instance, for blowing-engines for supplying the necessary air for steel furnaces. These are usually of the piston type, although the pressures rarely exceed 20 pounds per square inch.

468. Rotary Blowers. — Rotary blowers consist of two revolving blades, or pistons, of such form as to drive the air forward and maintain contact with the walls of the surrounding case and with each other so as to prevent leakage and a backward flow of the compressed air. A great variety of forms are

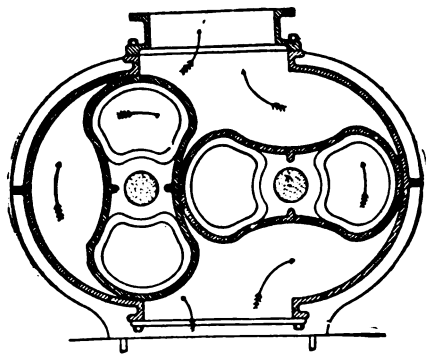

FIG. 326.

made, one of which is shown in Fig. 326. These blowers are suited for a pressure which does not exceed 20 pounds per square inch.

469. Centrifugal Fans, or Blowers.—In the centrifugal fan, or blower, particles of air are moved radially by the centrifugal force set up by the blades of a revolving wheel, which produces a pressure head proportional to the square of the velocity of the circumference. Two types are in commmon use (1) the propeller or disc form shown in Fig. 327, in which the current of air travels through the fan parallel to the axis, and (2) the blower type shown in Fig. 328, in which the air is received at the center of the wheel and discharged at the periphery into a casing or chamber from which it may be conveyed by pipes.

FIG. 327.

The disc fan is not adapted to move air against any sensible pressure, and is generally employed for circulating large volumes of air.

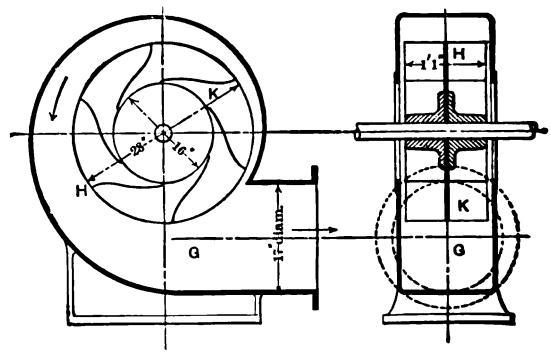

FIG. 328.

The blower type of fan is well adapted for pressures which do not exceed $\frac{1}{2}$ pound per square inch. By arranging blower fans in series, so that a fan working at low pressure supplies air to one working at higher pressure, the air can be compressed economically to a pressure of several pounds per square inch.

470. Measurement of Pressure and Velocity.—The *pressure* of compressed air is measured by a suitable type of pressure gauge or manometer as described in Chapter XI. When the pressure is high it is usually expressed in pounds per square inch or in atmospheres; when low it is usually expressed in fractions of a pound, or in ounces per square inch, or in inches of water or mercury. The relations of these units are shown in the table on page 336.

The *velocity* of air may be measured directly by use of the *anemometer* described in Art. 233, or indirectly by use of the Pitot tube described in Arts. 222 and 223. The velocity may be computed from the formula

$$v = c\sqrt{2ghr},$$

in which v = velocity in feet per second of the air impinging against the Pitot orifice, h, the reading of the anemometer, r, the ratio of the density of the liquid in the manometer to that of the air, c, a coefficient to be found by calibration.

When the air is at 32° F. and under a barometric pressure of 29.92 inches, and dry, one inch of water column will balance 60.2 feet of air, consequently for that case $r = 60.2$.

The density of air increases directly with the absolute pressure, and inversely as the absolute temperature, it varies also with moisture so that corrections are required for pressure, temperature, and the amount of moisture.

An extended use of the Pitot tube by the author has shown its accuracy for measurements of the velocity of air currents. The coefficient c will vary with the shape of the openings; with a tube of the form shown in Fig. 144, having an internal diameter of about $\frac{1}{2}$ inch and an opening at C of $\frac{1}{16}$ inch, c will be unity without sensible error. A straight tube with an opening in the side will give the same results as the bent nozzle shown in Fig. 144 and is much easier made.

The Pitot tube, shown in Fig. 146, may be arranged to give a value of c considerably higher than unity; for instance, if the

end of the straight tube D is closed, and an opening made about ½ inch above the lower end at right angles to the directions of the current, the value of c may reach 1.4. With the opening in one tube pointing down-stream and in the other up-stream the value of c will equal about 1.25.

In case the Pitot tube is used for determining the velocity in a pipe or channel, readings should be taken at regular intervals of depth. The mean velocity may be determined with little error by multiplying the velocity, which corresponds to each reading, by the area of section of which it forms the center, and dividing the sum of these products by the area of section. By constructing a velocity diagram, by laying off the velocities as abscissa to ordinates corresponding to depths, the mean velocity can also be obtained by dividing the area as obtained with a planimeter by this total depth or diameter.

The *velocity* of air can be computed with accuracy by measuring the amount of heat required to warm it through an observed range of temperature, as follows:

Let W represent the weight of air flowing in a given time, v its volume in cubic feet, δ its weight per cubic foot or density, s its specific heat (which is constant and equals 0.238), V its velocity, F the area of section of moving air in square feet, t its initial temperature, t' its temperature after being heated, and H the heat of known amount in heat-units applied to warm the air from temperature t to t'.

Since the heat absorbed by air is equal to the product of its weight, into its specific heat, into its rise of temperature,

$$H = Ws(t' - t) = v\delta s(t' - t);$$

but since

$$v = FV,$$

$$H = F\delta sV(t' - t),$$

from which the velocity

$$V = \frac{H}{F\delta s(t' - t)}.$$

A method of making the measurements as above is illustrated in Fig. 329, in which the air enters the pipe or channel at *A* and is discharged at *D*. Means for heating the air, which may be either a steam or electric radiator, is to be supplied. If a steam radiator, the heat discharged is computed from measurements of the weight and temperature of the condensed steam, the heat entering from measurements of pressure, quality, and weight by methods already explained. The heat taken up by the air is the difference of that entering and discharged. If an electric heater is used, the electric energy disappearing is measured and reduced by computation to heat-units. The means for heating should be of such form as to heat the air uniformly, which can often be accomplished by adopting a suitable form of heater.

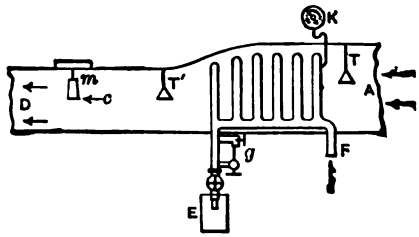

FIG. 329.—DIAGRAM OF METHOD OF MEASURING VELOCITY OF AIR.

The temperature of the entering and discharge air should be taken at sufficiently numerous points in the cross-section to make the average results accurate, and the thermometers should be protected from radiant heat. The average temperature should also be measured at the section where the velocity is to be computed. It may be desirable, in case extreme accuracy is required, to compute the weight of moisture in the air from observations with the dry- and wet-bulb thermometer.

Direct-reading instruments, as the anemometer or Pitot tube, can be calibrated by comparison of numerous readings in a section with the velocity obtained as explained above.

471. Effect of Clearance. — The effect of clearance in reducing the effective volume of the compressor cylinder may

be worked out from the relations of pressure, volume, and temperature, as given in equation (4) of Art. 462.

It is readily shown from equation (4) that

$$v_1 = v_2\left(\frac{p_2}{p_1}\right)^{1/k},$$

in which v_2 is the clearance volume in cubic feet, which is filled with air compressed to a pressure of p_2 pounds per square foot at each stroke, v_1 is the volume after the same air has expanded to a pressure of p_1 pounds.

The loss expressed in percentage of the cylinder displacement can be obtained by subtracting the volume at end of compression stroke from that at the beginning, which was occupied by the same mass of air, and dividing by the volume of piston displacement. If c = per cent. of clearance, and 100 = piston displacement, then will

$$\text{percentage loss of volume} = \frac{C - c\left(\frac{p_2}{p_1}\right)^{1/k}}{100} = \frac{c}{100}\left[1 - \left(\frac{p_2}{p_1}\right)^{1/k}\right].$$

472. Loss of Work Due to the Rise of Temperature.— The increase of temperature in adiabatic compression causes a loss of work. It can be computed by equation (6), Art. 462. The cooling of the air by the water-jacket is so slight that the actual compression curve, as shown on an indicator diagram, is usually very nearly coincident with the adiabatic curve. This causes a decided loss of work which is shown clearly by the diagram Fig. 330, which represents the work performed in compressing air in various ways.

Thus the area of the diagram *ABCFG* represents the work of compressing a given volume of air isothermally, from 0 pressure by gauge (14.7 pounds absolute) to 120 pounds by gauge (134.7 pounds absolute). The area of the diagram *ADEFG* represents in a similar manner the work done in compressing the same volume of air through the same pressures adiabatically. The

difference in these areas shows the loss in work due to the rise of temperature during adiabatic compression.

The diagram *ADBHFG* represents the compression of the same volume in a two-stage or compound compressor, with an intercooler. In this case the air is compressed adiabatically

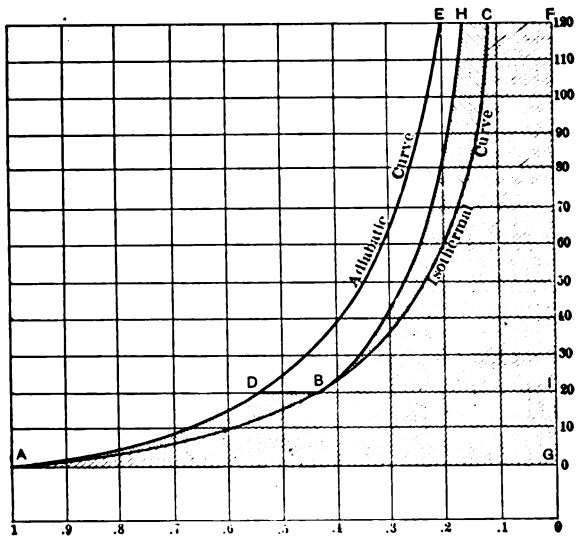

FIG. 330.

from *A* to *D* in the first cylinder, the excess of heat is removed by the intercooler, reducing the volume from *D* to *B*; it is then compressed adiabatically, *B* to *H*, in the second cylinder. The difference in area *DBHE* represents the saving in work by the two-stage or compound compressor as compared with the single compressor.

473. Theory of the Centrifugal Blower.—In the operation of the centrifugal blower the air is compressed so slightly that the change in pressure, volume, or temperature may be neglected in ordinary cases without producing sensible error.

For this condition the volume Q recorded will be directly proportional to the number of revolutions, n; the pressure pro-

duced, p, to the square of the number of revolutions; the work required, W, to the cube of the number of revolutions.

A full discussion of this theory will be found in the author's work on "Heating and Ventilating of Buildings."

The following formulæ are nearly correct:

Pressure produced,

$$h_3 = \frac{1}{3600} u^2 \left(1 - \frac{F}{F_1}\right)^2,$$

in which h_2 = pressure produced in inches of water, u = velocity of tips of blades, ft. per min., F = area of outlet, F_1 = area of inlet.

Volume discharged,

$$Q = KDdbn,$$

in which D = outer diameter of fan-wheel, d = inner diameter of fan-wheel in feet, b = breadth of fan at tips in feet, n = number of revolutions, K = a constant for a given pressure.

When $db = 0.25\ D^2$, which is the usual proportion, $K = 0.6$ when $h_2 = \frac{1}{4}$, $K = 0.5$ when $h_3 = 1$, $K = 0.4$ when $h_2 = 2$, approximately.

The work requi d.

$$W = \frac{cQv^2}{2g} = K'bdD^3n^3.$$

In which K' is a coefficient which decreases as the pressure increases.

474. Test of Air-compressor. — The following tables suggest the observations that are needed for a complete test of an air-compressor.

Air-compressor built by.....at.....
Tested at.....Date.....190
Cards integrated by.....Checked by.....
Scale of springs. . . .Steam, left. . . .Steam, right. . .Air high press. . . Air low press

DIMENSIONS.

STEAM-CYLINDERS.

Left.	*Right.*
Dia. in inches.....	Dia. in inches.....
Area in sq. in.....	Area in sq. in.....
Dia. piston rod in in.....	Dia. piston rod in in.....
Area in sq. in.....	Area in sq. in.....
Length of stroke in feet.....	Length of stroke in feet.....

Piston Displacement in Cubic Feet.

Head.....Crank.....Head.....Crank.....

Volume in Clearances Per Cent.

Head.....Crank.....	Head.....Crank.....
Barometer inches.....	Tempt. room.....
Per cent. moisture in air	

AIR-CYLINDERS.

High Pressure.	*Low Pressure.*
Dia. in inches.....	Dia. in inches.....
Area in sq. in.....	Area in sq. in.....

Diameter of Piston-rods in Inches.

Head.....Crank.....	Head.....Crank.....

Area of Piston-rods in Square Inches.

Head.....Crank.....	Head.....Crank.....
Length of stroke in ft.....	Length of stroke in ft.....

Piston Displacement in Cubic Feet.

Head.....Crank.....	Head.....Crank.....

Volume of Clearances per cent.

Head.....Crank.....	Head.....Crank.....

Revolutions:
- Continuous counter.....
- Per minute.....

Boiler or steam-chest pressure.....
Reservoir pressure, air.....
Nozzle pressure, air.....

Temperatures:
Entering low-pressure cylinder, air.....
Leaving low-pressure cylinder, air.....
Entering high-pressure cylinder, air.....
Leaving high-pressure cylinder, air.....
Nozzle, air.....
Outside, air.....
Calorimeter, steam.....
Jacket-water:
Entering cooler.....
Leaving cooler or entering low-pressure cylinder.....
Leaving low-pressure cylinder or entering high-pressure cylinder.....
Leaving high-pressure cylinder.....
Weight of jacket-water, pounds.....
Weight of condensed steam, pounds.....
Heat absorbed by jacket-water:
From cooler.....
From low-pressure cylinder.....
From high-pressure cylinder.....
Total.....
Quality of steam, per cent.....
Mechanical efficiency, per cent.....
Pounds of steam per I.H.P. per hour.....
Cubic feet of air per piston displacement at standard conditions.....
Cubic feet of air delivered as per nozzle at standard conditions.....
Per cent slip.....
Pounds of air compressed per hour, standard conditions.....
Efficiency of compressor.....
Volumetric efficiency.....
Total efficiency of machine.....

475. Test of Centrifugal Blower.—The following table suggests the quantities to be observed for a test of a centrifugal blower driven through a transmission dynomometer:

TEST OF CENTRIFUGAL BLOWER.

Kind.....	Date.....
Form of blades.....	Discharge area.....
Diameter of fan.....	Temperature of room.....
Width of fan.....	Barometer.....
Form of inlet.....	Anemometer diameter.....
Inlet area.....	" coefficient.....
Formula.....	Weight of air per cubic foot.....
Maker.....	Moisture in air, per cent.....
Made by.....	

No. of Run.....	I.	II.
Time begun.....	.....	.....
Time ended.....	.....	.....
Length of run.....	.....	.....
Duration in minutes.....	.....	.....
Tachometer.....	.....	.....
R.P.M. of fan.....	.....	.....
Air pressure per square inch, ounces.....	.....	.....
Pressure head in water, inches.....	.....	.....
Velocity " " " "	.....	.....
Anemometer readings, inlet.....	.....	.....
Temperature entering heating-box.....	.....	.....
" leaving "	.....	.....
Heat units absorbed.....	.....	.....
Weights discharged per second.....	.....	.....
Velocity of air, feet per second.....	.....	.....
Cubic feet discharged per second.....	.....	.....
Velocity of fan-blade tips, feet per second.....	.....	.....
Dynamometer reading	.....	.....
Dynamometer horse-power.....	.....	.....
Developed horse-power.....	.....	.....
Cubic feet air per H.P. per second.....	.....	.....
Efficiency, per cent.....	.....	.....

CHAPTER XXV.

MECHANICAL REFRIGERATION.

476. Introduction. — Systems of mechanical refrigeration are extensively employed, either for maintaining a low temperature or for the manufacture of ice, and some practical acquaintance with the processes successfully employed is of importance to the mechanical engineer.

The *refrigerating machine* is a species of heat-engine, in which, by means of mechanical work, heat is transferred from one substance to another, the effect being to reduce or lower one temperature and increase the other. The ideal machine for this work is the reversible engine operating in a Carnot cycle in a reverse or backward direction from that of the steam-engine, the hot-air engine, and other heat-engines.

The following illustrations will render this statement clear. Carnot's reversible engine, when working as a heat-engine, takes from the source of heat a quantity, H, of which it changes a part, AW, into mechanical energy, and, as there are no losses, rejects the remainder, H_r, to the refrigerator, b. We have for the efficiency, since $H - H_r = AW$,

$$E = \frac{AW}{H} = \frac{H - H_r}{H} = \frac{T - T_1}{T}. \quad . \quad . \quad . \quad . \quad . \quad (a)$$

If the engine be run backward so as to describe its cycle in the reverse order, it takes heat from the refrigerator, adds to it the heat equivalent of the work of the cycle, and delivers the same to the source of heat and thus becomes a refrigerating machine.

Th efficiency becomes for this case

$$E_1 = \frac{H_e}{AW} = \frac{H_e}{H - H_e} = \frac{T_1}{T - T_1}, \quad \ldots\ldots (b)$$

which is called the "*Thermodynamic Efficiency.*"

In a heat-engine operating in a Carnot cycle the working substance is first compressed adiabatically, in which case its temperature rises; second, it is compressed isothermally, in which case the temperature remains constant, which requires that the heat generated be absorbed and removed; then it is allowed to expand, adiabatically and isothermally, until the working substance is in its orginal condition. During the last operation heat must be supplied the working substance to maintain a constant temperature.

The equations expressing the relations between pressure, volume, and temperature during compression and expansion of a perfect gas are given in Art. 462, and should be referred to in connection with the investigation of the refrigerating machine.

477. Relation of Mechanical Work to Heat Transfer.—The cycle of heat exchanges for a refrigerating machine of any class can be written for one unit of weight as follows:

Let H = the original heat of the working substance; H_1 = the heat at end of compression, were none removed by cooling or loss; H_2 = the heat at end of compression after cooling; H_3 = the heat at end of expansion, supposing none removed for cooling purposes; K = the heat taken up by the cooling liquid during compression and condensation; K_1 = the heat taken up by the substance during refrigeration; AW_c = the mechanical work of compression; AW_e = the mechanical work done during expansion. We have then the following equations, expressed in heat-units, supposing no radiation or cylinder losses to exist:

During compression,	$H + AW_c = H_1$;	. . . (1)
Cooling or condensation,	$H_1 - K = H_2$;	. . . . (2)
During expansion,	$H_2 - AW_e = H_3$;	. . . (3)
Refrigeration,	$H_3 + K_1 = H$.	. . . . (4)

In the above equations K_1 is the measure of the refrigerating value, since it is the heat absorbed at the lowest temperature, and by substituting in the above equations we find that

$$K_1 = H - H_3 = H - H_2 + AW_e = H - H_1 + K + AW_e$$
$$= H - H_1 - AW_c + K + AW_e = K - A(W_c - W_e). \quad . \quad (5)$$

That is, the possible heat transfer or refrigeration in the perfect machine is equal to the heat carried off by the cooling and condensing water, K, diminished by the difference of the heat equivalent of the work done in compression and in expansion.

By transposing in equation (5),

$$A(W_c - W_e) = K - K_1. \quad . \quad . \quad . \quad . \quad . \quad . \quad (6)$$

That is, the mechanical work in the perfect refrigerating machine is equivalent to the heat removed by cooling and condensing less that transferred from refrigerator to source of heat.

478. The Efficiency of the Refrigerating Machine.—It has previously been shown, by equation (5), that, supposing no losses in the machine, the heat, K_1, received from the refrigerator, increased by the heat equivalent of the mechanical work $(AW_c - W_e)$, equals the heat discharged, K. That is, representing the net mechanical work by AW,

$$AW = A(W_c - W_e) = K - K_1. \quad . \quad . \quad . \quad . \quad . \quad (7)$$

If the heat carried off in the condensing water cannot be utilized, the highest possible efficiency of the system is the ratio of the refrigeration K_1 to the work $A(W_c - W_e)$; that is, the possible efficiency E becomes, for that case,

$$E = \frac{K_1}{A(W_c - W_e)} = \frac{K_1}{K - K_1}. \quad . \quad . \quad . \quad . \quad . \quad (8)$$

If W is expressed in foot-pounds, $A = \frac{1}{778}$; if W is expressed in horse-power, $A = 42.42$.

The actual refrigerating machine not being perfect, the mechanical work expended, AW, is less than the increase in the heat transferred, and we should have for the actual machine

$$AW < K - K_1. \quad . \quad . \quad . \quad . \quad . \quad . \quad . \quad (9)$$

The amount of refrigeration or cold produced is the quantity K_1, since that is the heat taken from the colder body and transferred to the hotter. The object of the refrigerating process is the removal of the heat K_1, so that this may be considered the useful work. The total energy supplied is the mechanical work of compression. The efficiency of the actual machine is the ratio of the useful work to the total energy expended, and consequently is

$$E_2 = \frac{K_1}{A(W_c - W_e)} = \frac{K_1}{AW}. \quad . \quad . \quad . \quad . \quad . \quad (10)$$

The thermodynamic efficiency of a refrigerating machine operating in a Carnot cycle, as given in equation (*b*), is the absolute temperature ($T_1 = 460 + t$), divided by the rise in temperature ($T - T_1$). The ratio of the actual efficiency to this quantity, often called the "*Coefficient of performance*," E_3, is a valuable standard of comparison:

$$E_3 = \frac{K_1}{AW} \div \frac{T - T_1}{T_1} = \frac{K_1}{AW} \cdot \frac{T_1}{T - T_1}. \quad . \quad . \quad . \quad (11)$$

The thermodynamic efficiency of an engine working in a Carnot cycle is less than one, hence that in the refrigerator cycle must in every case be correspondingly greater than one. It must reach its limit, as noted by discussion of equation (9), when $T - T_1$ has the least value, or when this value approaches 0, in which case the limiting value of the efficiency approaches infinity.

The expression asserts what is certainly true, that for a given expenditure of work the output or energy discharged is much greater than that put in, or, from such a standpoint, the machine has a greater efficiency than unity. (See test, page 747.)

Considering the refrigerating machine as the heat-engine reversed, it is noted that in the heat-engine the amount discharged by the exhaust is very great. In the case of a refrigerating machine heat is received at the lower temperature; in other words, flows in at the exhaust-pipe, is increased by the mechanical equivalent of the work done, and the total is discharged at a higher temperature.

There is no reason why K_1 should not be many times greater than AW; in fact they stand in no closer relation in a theoretical way than the heat discharged in the exhaust does to that transformed into work in the steam-engine.

479. Negative Heat Losses.—In the case of the steam-engine, heat is taken from the steam to warm up the cylinder and keep it warm, giving rise to the loss known as cylinder condensation; in addition, heat is radiated into the surrounding space. These losses reduce the working value of the steam as to 50 per cent. In the refrigerating machine similar losses of an opposite and negative character exist.

The effect of the negative heat losses would be as follows: In the compression the cylinder becomes heated, and this heat is only partially discharged to the condenser; the remainder keeps the cylinder warmer than it otherwise would have been even at the end of expansion. This heat in the cylinder walls warms and expands the entering gas as it flows in, and has the effect of reducing its capacity, being thus exactly opposed in character, but otherwise similar to the loss of heat which occurs with a heat-engine. During a great part of the revolution the temperature in the cylinder is below that of the room, in which case heat will flow from the surrounding room into the working cylinder.

480. The Working Fluid.—The working fluids are usually selected among the fixed gases, or from liquids which

boiling-point is very low. The principal freezing machines use either air, ammonia, or carbon dioxide, but water-vapor or steam may be employed. The properties desirable in a vapor or gas to be used for refrigeration purposes are:

First, latent heat of vaporization large, which will permit the use of a small amount of working substance, since the capacity of a given weight to transfer heat is proportional to this quantity.

Second, freezing-point low; as the capacity to absorb heat is a function of difference of temperature, the lower the temperature at which a given substance will remain liquid, the greater the capacity for a given weight, and also the lower the temperature which can be attained. It is hardly necessary to mention that a solid body cannot be pumped, and that as soon as it solidifies it becomes useless for refrigeration.

Third, considerable change in temperature for moderate increase of pressure. In addition, commercial considerations render it necessary that the liquid shall be reasonable in cost, and shall be one that will not attack or destroy the machinery used.

Water Vapor.—A steam-engine, run backward or as a compressor, with steam as a working substance, would convey heat from a lower to a higher temperature at the expense of the net work of compression. In this case, however, the lower limit of temperature could not be much less than that of the freezing-point of water. In any case, when expansion occurred, an amount of heat equivalent to the latent heat of liquefaction would be absorbed from the surrounding medium.

While steam or vapor of water has a very high latent heat, it becomes solid at a comparatively high temperature (32° F.), and consequently is not well suited for use in a refrigerating machine.

In a pressure below that of the atmosphere considerable vapor is given off, and practical ice-making machines have been built to work under such conditions. These machines are known as *water-vapor* vacuum machines.

Air.—An air-compressor would transfer heat, as already explained, by the mechanical work of compression.

Anhydrous Ammonia.—This material is produced as a waste product in various industries in an impure form, and it needs only to be purified and separated from water to fit it for refrigeration purposes.

The material exerts no corrosive action on iron, and for this reason does not affect in any degree the ordinary machinery for conveying or compressing it.

It will, however, attack brass or copper and must be kept from contact with these metals.

Its important properties are given in the following table:

At atmospheric pressure boiling-point is 28.6° F. Weight at 32° F., combined with water, is 0.6364, or 39.73 pounds per cubic foot, or 5.3 pounds per gallon. Specific heat is 0.50836. Latent heat at 32° F. is about 560 B.T.U.

The following table, giving the principal properties for each 10 degrees of temperature on the Fahrenheit scale, is taken from Professor Wood's Thermodynamics.

PROPERTIES OF SATURATED ANHYDROUS AMMONIA.

Degrees F.	Pressure Absolute per Sq. Inch.	Total Latent Heat. r	External Latent Heat. apw	Internal Latent Heat. S	Volume of 1 Pound of Vapor Cu. Ft.	Volume of 1 Pound of Liquid Cu. Ft.	Weight of 1 Cu. Ft. in Pounds.
−40	10.69	579.67	48.25	531.42	24.38	0.0234	0.0411
−30	14.13	573.69	48.85	524.84	18.67	0.0237	0.0535
−20	18.45	567.67	49.44	518.23	14.48	0.0240	0.0690
−10	23.77	561.61	50.05	511.56	11.36	0.0243	0.0880
0	30.37	555.5	51.38	504.12	9.14	0.0246	0.1094
10	38.55	549.4	51.13	498.22	7.20	0.0249	0.1381
20	47.95	543.15	51.65	491.50	5.82	0.0252	0.1721
30	59.41	536.92	52.02	484.90	4.73	0.0254	0.2111
40	73.00	530.63	52.42	478.21	3.88	0.0257	0.2577
50	88.96	524.3	52.82	471.44	3.21	0.0260	0.3115
60	107.60	517.93	53.21	464.76	2.67	0.0265	0.3745
70	129.21	511.52	53.67	457.95	2.24	0.0268	0.4464
80	154.11	504.66	53.96	450.75	1.89	0.0272	0.5291
90	182.8	498.11	54.28	443.70	1.61	0.0274	0.6211
100	215.14	491.5	54.54	437.35	1.36	0.0279	0.7356

481. The Air-refrigerating Machine.—In this case air is compressed by mechanical means, and the heat which is generated is removed by a water-jacket, so that the temperature after compression is approximately the same as at the beginning. It is then permitted to expand adiabatically against a resistance so as to perform mechanical work, and in so doing falls in temperature. It can afterward take up heat from the surrounding bodies. It was experimentally demonstrated by Joule that the temperature of air remains constant if it expands without doing external work.

For the air-refrigerating machine W_e in equation (5), the mechanical work done during expansion, is considerable; for the ammonia machine it is usually small and often zero. The heat capacity of any gas which does not change its state is small, and is equal to the product of specific heat, into weight, into change of temperature. On the other hand, when vapors are employed which are converted into liquids during the process of compression and cooling, and then changed into vapors during expansion, the heat capacity of a given weight is increased because of its latent heat, which is always comparatively large. It becomes quite evident from the latter consideration alone that the air machine must for a given capacity be many times greater in size than the ammonia machine.

Two of the more successful machines of this type are described as follows: The Windhausen machine, which was operated during the Vienna Exposition, had a capacity of 30 cwt. of ice per hour. In its construction it consisted of a single cylinder, each end of which was alternately a compressed-air engine and a pump for compressing the air. The compressed air was delivered to a cooling vessel, and from thence to one end of the cylinder, being admitted by a valve motion, and acting in its expansion to move the piston and help to compress the air drawn in at the other end. The exhaust air after, being deprived of its heat by the work of expansion, was passed to the cooling vessels, and utilized in lowering the temperature of a quantity of brine, or directly discharged for refrigeration purposes. The

power required over and above that provided by the compressed air was supplied by an engine.

The Bell-Coleman machine, which is extensively used on shipboard for refrigeration purposes, is constructed in much the same manner as the Windhausen, but the operations of compressing and expanding are performed in separate cylinders. The machine consists of three tandem cylinders, and three pistons fixed to a common piston-rod. One cylinder is the air-compressor, the other the air-engine, while a third is a steam-engine which supplies the excess of power needed to move the pistons.

The amount of work required and the change of temperature produced in the expansion and compression of air have been discussed quite fully in Art. 462.

482. The Ammonia Compressor.—A general outline of an ammonia compression system is shown in Fig. 331. It

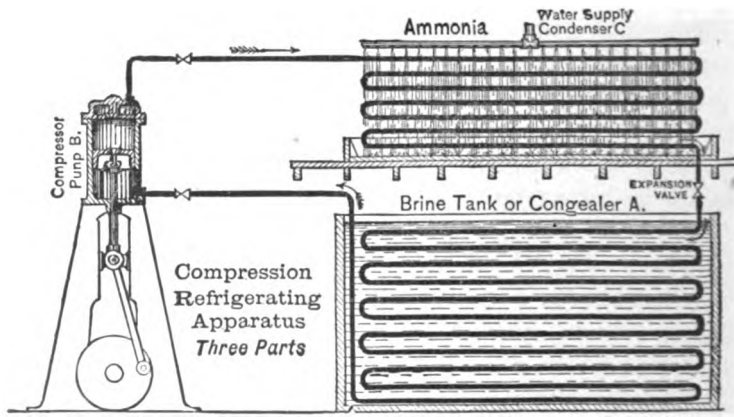

FIG. 331.—OUTLINE DRAWING OF MECHANICAL COMPRESSION SYSTEM.

consists of a compressor or pump, *B*, which draws the ammonia vapor from the brine-tank or congealer, *A*, compresses it, and then delivers it to the large condenser, *C*, where it is cooled by water and is liquefied. The liquid ammonia under pressure is then permitted to flow through the expansion-valve shown

between the condenser and the brine-tank. In passing through the expansion-valve and into the expansion-pipe shown in the brine-tank, the liquid ammonia is vaporized by expansion, and the heat required is taken up from the material surrounding the coil.

The apparatus as shown consists of three parts: (1) the expansion-valve and coil, in which the liquid is vaporized, (2) the compressor, in which the vapor is compressed; and (3) the condenser, in which the vapor is reduced to a liquid. If there were no other heat losses, it is evident that the heat given off in the condenser would equal that drawn from the medium surrounding the expansion-coils.

In the apparatus illustrated the expansion-coils are shown surrounded by brine. In many cases the expansion coils are in contact with the air of the room which is to be lowered in temperature. In some instances the brine, after being cooled by the expansion of ammonia, is circulated to the places where a low temperature is required.

The compression cylinder for the ammonia refrigeration machine should be made with as small a clearance as possible, for the reasons which have already been given in the discussion of the air-compressor. Fig. 332 shows an enlarged view of a single-acting ammonia-compression cylinder surrounded with a water-jacket for removing heat during compression. In some instances ammonia compressors have been provided with means for keeping the clearance spaces filled with oil. In such cases an oil-separator is employed between the compressor and the condenser, which is arranged to take the oil out of the ammonia pipes and return it to the compressor.

Refrigerating machines are used for the cooling of buildings and also for the manufacture of ice. For the manufacture of ice a brine-tank is usually employed which is maintained at low temperature by the expansion of ammonia in coils inserted in the tank substantially as shown in Fig. 331. The ice is usually made by freezing distilled water in cans of the desired shape. In nearly all ice-plants of this character, apparatus is required

not only for the ammonia system but also for supplying and purifying the water. Fig. 333 shows a section of an ice-making plant with all the principal parts named. The operation of the plant can be understood from a study of the drawing.

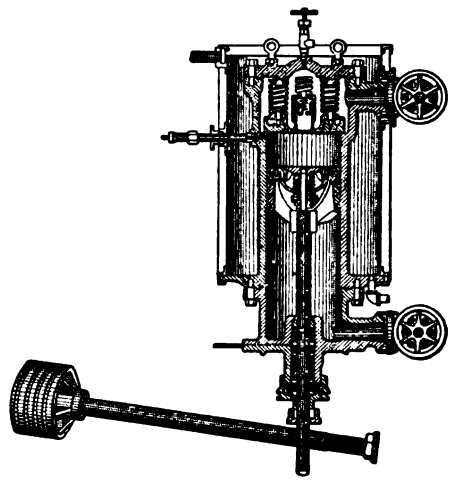

FIG. 332.—AMMONIA COMPRESSION CYLINDER.

Ice is also made by directly freezing water in contact with the expansion system. In such case the ice is frozen in large plates, and is usually removed by discharging hot ammonia liquid directly into the expansion system, which loosens it from the expansion plates. It is in such cases usually cut into small pieces by the use of jets of steam.

483. Relations of Pressure and Volume. — In the compression of ammonia the relations of pressure, volume, and temperature are essentially as those given in equation in Art. 462. The compression is usually very nearly adiabatic, as indicated by the diagrams taken with an indicator. For the adiabatic curve of ammonia vapor,

$$k = 1.3.$$

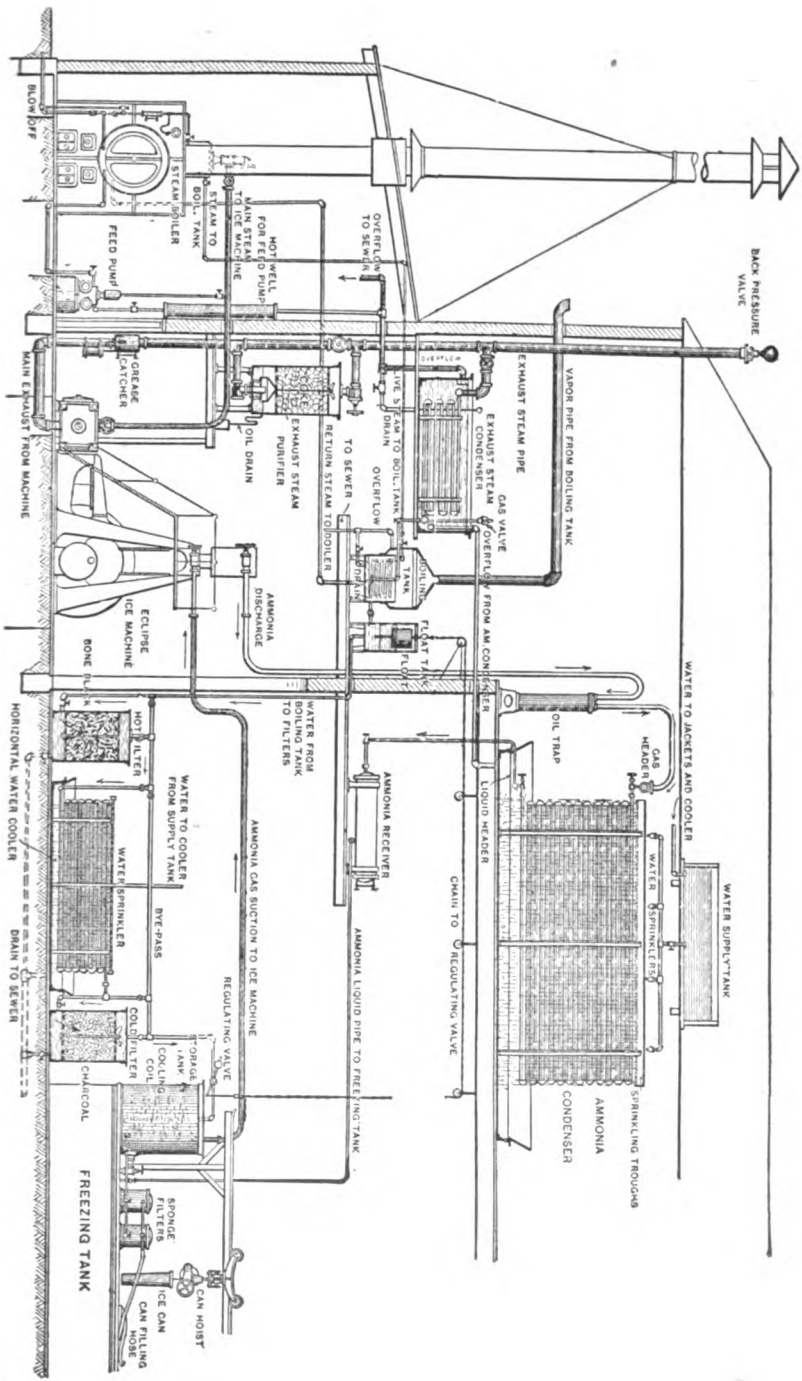
BLOW OFF
STEAM BOILER
STEAM TO BOIL. TANK
MAIN STEAM TO ICE MACHINE
HOT WELL FOR FEED PUMP
FEED PUMP
OVERFLOW TO SEWER
BACK PRESSURE VALVE
GREASE CATCHER
MAIN EXHAUST FROM MACHINE
OIL DRAIN
EXHAUST STEAM PURIFIER
RETURN STEAM TO BOILER
TO SEWER
OVERFLOW
DRAIN
EXHAUST STEAM CONDENSER
EXHAUST STEAM PIPE
VAPOR PIPE FROM BOILING TANK
GAS VALVE
OVERFLOW FROM AM. CONDENSER
BOILING TANK
FLOAT TANK
AMMONIA DISCHARGE
ECLIPSE ICE MACHINE
BONE BLACK
WATER FROM BOILING TANK TO FILTERS
HOT FILTER
HORIZONTAL WATER COOLER
WATER TO COOLER FROM SUPPLY TANK
WATER SPRINKLER
BYE-PASS
DRAIN TO SEWER
COLD FILTER
CHARCOAL
STORAGE TANK
COOLING COIL
REGULATING VALVE
AMMONIA GAS SUCTION TO ICE MACHINE
AMMONIA RECEIVER
AMMONIA LIQUID PIPE TO FREEZING TANK
LIQUID HEADER
CHAIN TO REGULATING VALVE
OIL TRAP
GAS HEADER
WATER TO JACKETS AND COOLER
WATER SPRINKLERS
WATER SUPPLY TANK
SPRINKLING TROUGHS
AMMONIA CONDENSER
FREEZING TANK
SPONGE FILTERS
ICE CAN
CAN FILLING HOSE
CAN HOIST

In Fig. 334 is shown a series of adiabatic curves for different pressures and volumes drawn by Mr. R. L. Shipman, which will be found extremely useful in making a comparison of the compression line obtained on an indicator diagram with an adiabatic curve corresponding to the same pressure and volume.

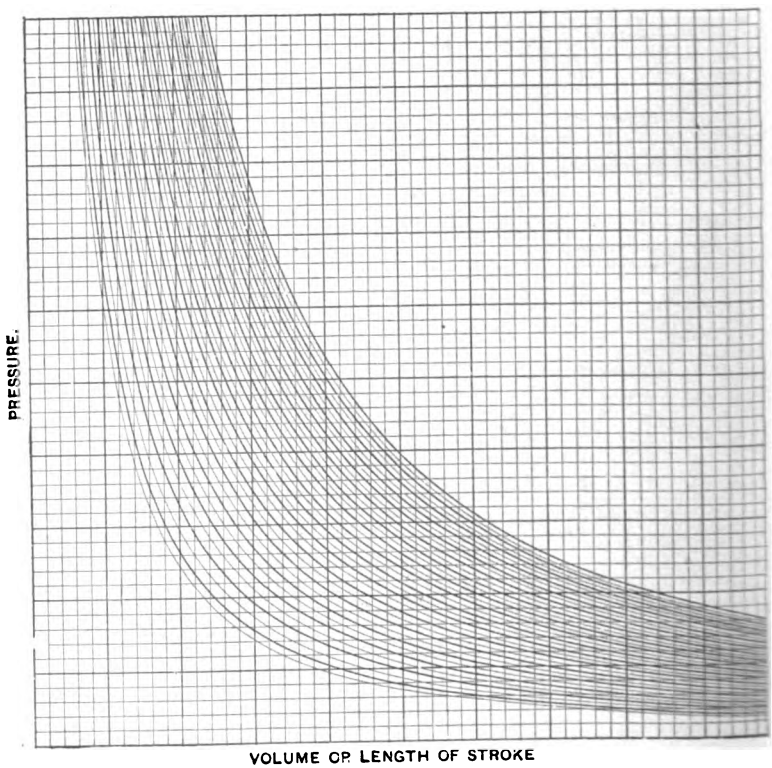

FIG. 334.—ADIABATIC CURVES FOR DIFFERENT PRESSURES AND VOLUMES.

The following table gives the result of a series of tests ammonia compression machines, made by C. Linde of Mun and are of interest as showing the amount and character of various quantities described The table is copied from a pa read before the American Society of Mechanical Enigneers the Chicago meeting, 1893. The units were reduced to c

minute of time instead of one hour. It is noted that in every case AW is less than $K-K_1$, and it should also be further noted that the smaller this difference the greater the economical performance of the machine.

Number of Test.	1	2	3	4	5
Temp. of brine: Inlet, deg. F.	43.2	28.3	13.9	−0.3	28.3
Temp. of brine: Outlet, deg. F.	37.0	22.9	8.7	−5.9	23.1
Specific heat of brine per unit of volume	0.861	0.851	0.843	0.837	0.851
Quantity of brine per hr., cu. ft.	1039.4	908.8	615.4	915.0	800.9
Cold produced, B.T.U. per min., K_1	5715.1	4309.1	2781.3	2024.5	3671.4
Temp. of cooling water: Inlet, degs. F.	48.8	49.5	49.1	49.1	49.2
Temp. of cooling water: Outlet, degs. F.	66.7	68.0	67.1	67.3	93.4
Quan. of cooling water per hr., cu. ft.	338.7	260.8	187.4	140.0	97.8
Heat removed by condenser per minute, B.T.U., K	6305.9	5023.4	3509.5	2648.7	4518.9
Increase in heat, $K-K_1$	590.8	724.3	728.2	624.2	847.5
I.H.P. in comp. cyl., W	13.82	14.29	13.84	11.98	19.75
Heat equivalent of work, AW	586.2	606.2	587	508.2	837.1
I.H.P. in steam-engine cylinder	15.80	16.47	15.45	14.24	21.61
Consumption of steam per hour, lbs.	311.5	336.0	306.8	278.8	430.1
Consumption of steam per minute, lbs.	5.19	5.6	5.11	4.65	7.17
Cold produced in B.T.U. per minute per I.H.P. in comp. cyl.	413.5	307.7	200.9	169.0	185.9
Cold produced in B.T.U. per minute per I.H.P. in steam cylinder	361.7	267.1	180.7	142.2	169.7
Cold produced in B.T.U. per minute per pound of steam	1100	785.6	543.9	435.8	512.1
Thermodynamic efficiency $(460+t)\div(t_c-t)=E_1$	17.2	10.65	8.04	6.2	6.86
Actual efficiency $K_1\div AW=E_2$	9.75	7.26	4.73	4.03	4.38
Ratio of actual to thermodynamic efficiency	0.56	0.68	0.59	0.667	0.637
$AW-(K-K_1)$	−4.6	−118.1	−141.2	−116.0	−10.4
* Lbs. of ice melted per lb. of steam	7.52	5.66	3.85	3.1	3.64
Lbs. of ice melted per lb. of coal	75.2	56.6	38.5	31.0	36.4

* Latent heat of ice taken as 141 B.T.U.

484. The Absorption System of Refrigeration.—This system was invented by M. Carre, and dispenses with the ammo-

nia compressor. Instead of compressing the ammonia by pressure, water strongly impregnated with ammonia gas is heated by steam. The heat vaporizes the ammonia and, because of the low boiling temperature of the ammonia, causes as much pressure as required. The compressed ammonia is treated as in the other processes, that is, it is first passed through a condenser and liquefied, thence to expansion-coils, where it takes up heat from the surrounding material. Instead of being pumped back as in the first system, it is absorbed by water and the dilute liquid is pumped.

Fig. 335 shows a view of an absorption system with all the principal parts named. It is worthy of a close study, as showing the economy practiced in the use of the heat employed.

The strong ammonia liquid from the *absorber* is pumped through a *heater*, where it is surrounded by weak ammonia liquor which had been previously heated in the *gene ator*. It then flows, partially heated, to the *analyzer*, where it exposes a large surface to the heat. The principal part of the ammonia gas under pressure passes off above, the weak ammonia liquor falls to the bottom of the generator. The ammonia gas under the pressure due to its temperature is received in the condensing coil. In this coil the pressure is maintained, but the temperature is lowered by the use of condensing water, so that the ammonia gas is converted into liquid anhydrous ammonia.

The anhydrous ammonia is used as in the other systems; it may be allowed to expand in a tank filled with brine, or it may be carried to the rooms where refrigeration is needed and then permitted to expand. In the figure the brine system is shown. the expansion taking place in the *cooler*, in which a circulation of brine is maintained by a pump.

The weak ammonia from the generator, after parting with some of its heat in the heater, is brought in contact with the ammonia in a vessel called the absorber. The ammonia gas has a strong affinity for water, and is absorbed readily, converting the weak ammonia liquor into strong ammonia liquor. This is pumped to the heater and completes the cycle. The exhaust

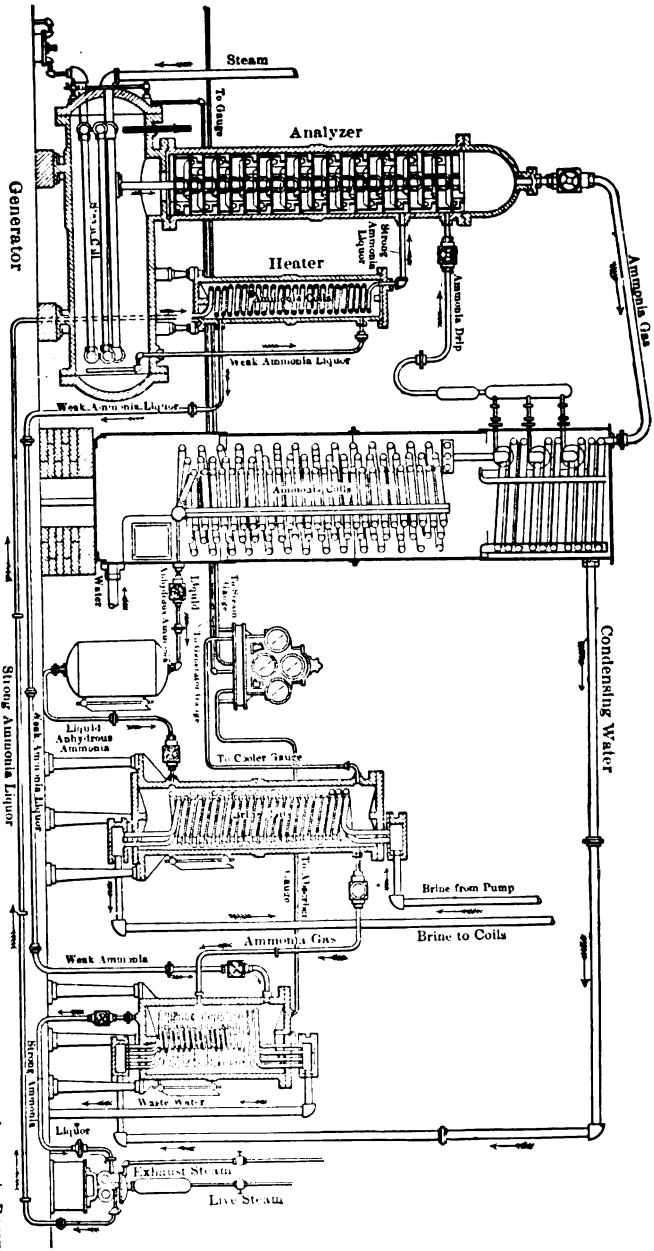

FIG. 335.—DIAGRAM OF AMMONIA ABSORPTION SYSTEM.

steam from the pumps is utilized in heating under ordinary conditions, so that all the heat wastes are carried off in the condensing water and in the drip from the generator.

When a low back pressure is wanted, such as is required in production of ice, this system succeeds well, and is somewhat more economical than the compression system. For purposes of refrigeration where a high back pressure is maintained the compression system is more economical in its operation.

The following sheets indicate the observations which are necessary for a complete test of an ammonia refrigerating machine:

LOG A.

Test of Refrigerating Machine built by.....*Style*.....
Tested at.....*Date*.....
Size of Ammonia Cylinder—Diam.....*Stroke*.....*Scale of Ind. Spring*.....
Capacity of Expansion Valve....*Specific gravity of Brine*....*Barometer*.....
Test made by.....
No.....
Time.....
Speed-counter .....
Revolutions per minute.....
Temperature, room.....
Temperature, external air.....
Condenser:
  Temperature, entering gas.....
  Temperature, injecting water.....
  Temperature, discharging water.....
Weight water.....lbs.....
Compression gauge..... " .....
Expansion Coils:
  Temperature, entering gas.....Deg. F. .....
  Temperature, discharging gas..... " .....
Suction gauge.....lbs.....
Brine Tank:
  Temperature, entering brine.....
  Temperature, discharging brine.....
  Meter reading.....
  Cubic feet, brine.....
Weight of brine, pounds.....
Revolutions of expansion valve.....
Temperature, liquid NH_3, at expansion valve.....

LOG B.

Test of Refrigerating Machine built by.....
Tested at ..... *Date*.....
Tested by.....
Specific gravity of NH_3..... *Specific heat of* NH_3.....
Specific gravity of brine..... *Specific heat of brine*.....
Number ... ...
Brine:
Pounds, circulated.....
Range, temperature.....
B.T.U. discharge.....
Condenser:
Pounds, water.....
Range, temperature.....
B.T.U. discharge.....
Gain B.T.U.....
Compression cylinder:
Absolute pressure admitted.....
Absolute pressure discharged.....
M.E.P.....
D.H.P.....
Work, B.T.U.....
Ammonia:
Pounds, circulated.....
Heat of vaporizion, suction pressure.....
Heat of vaporizion, condenser pressure.....
Temperature due to pressure in refrigerating coils.....
Absolute pressure in refrigerating coils.....

SPECIFIC HEAT OF BRINE.

Specific Gravity.....	1.187	1.170	1.103	1.072	1.044	1.023	1.012
Specific Heat.....	0.791	.805	.863	.895	.931	.962	.978

SPECIFIC HEAT CHLORIDE OF CALCIUM SOLUTION.

Specific Gravity.....	1.0255	1.163
Specific Heat.....	0.957	0.827

REPORT.

Test of Refrigerating Machine built by.....

Tested at.....*Date*.....*Latent heat of ice* 142.2

Tested by.....

No.		Symbols.	Formulæ.
1	Pounds of condensing water per hour	Q	
2	Range of temperature of condensing water	t_a	
3	Pounds of brine per hour	Q_1	
4	Range of temperature of brine	t_b	
5	Pounds of ammonia per hour	Q_2	
6	Pounds of condensing water per pound of NH_3		
7	Average temperature outlet of brine	t_3	
8	Average temperature outlet of cooling water	t_0	
9	Temperature of NH_3 entering brine tank	t_1	
10	Corresponding sensible heat liquid above 32 in B.T.U.	q_1	
11	Total heat NH_3 gas B.T.U. at suction pressure	λ_2	
12	Temperature of gas leaving brine tank	t	
13	Temperature of gas corresponding to suction pressure	t_2	
14	Superheating of gas in degrees Fahrenheit	d_1	$t-t_2$
15	Cooling per pound of ammonia in B.T.U.	K_2	$\lambda_2-q_1+0.51\ d_1$
16	Temperature of gas entering condenser	t_c	
17	Heat carried off by condensing H_2O per hour B.T.U.	K	QT
18	Heat taken from brine per hour B.T.U. (Refrigeration)	K_1	$Q_1T_1\times$ Spe. ht.
19	D.H.P. ammonia cylinder		
20	Foot-pounds of work per hour, no friction	W	
21	Heat equivalent of work per hour B.T.U.		AW
22	Heat carried from brine per pound NH_3 circulated		
23	Heat carried off by cond. H_2O per pound NH_3 cir.		
24	Heat gained by system per hour B.T.U.		$K-K_1$
25	Thermodynamic efficiency	E_1	$\frac{t+461}{t_c-t}$
26	Actual efficiency	E_2	$K_1\div AW$
27	Ratio actual to thermal efficiency	E_3	E_1+E
28	Ice-melting capacity pounds 24 hours at 100 revolutions		

LIST OF TABLES.

		PAGE
I.	U. S. Standard and Metric Measures	754
II.	Numerical Constants	756
III.	Logarithms of Numbers	769
IV.	Logarithmic Functions of Angles	771
V.	Natural Functions of Angles	777
VI.	Coefficients of Strength of Materials	781
VII.	Strength of Metals at Different Temperatures	782
VIII.	Important Properties of Familiar Substances	783
IX.	Coefficient of Friction	784
X.	Hyperbolic or Naperian Logarithms	784
XI.	Moisture Absorbed by Air	785
XII.	Relative Humidity of the Air	785
XIII.	Table for Reducing Beaumé's Scale-reading to Specific Gravity	786
XIV.	Composition of Various Facts of the United States	787
XV.	Buel's Steam-tables	788
XVI.	Entropy of Water and Steam	794
XVII.	Discharge of Steam: Napier Formula	795
XVIII.	Water in Steam by Throttling Calorimeter	795
	Diagram for Determining Per Cent of Moisture in Steam	796
XIX.	Factors of Evaporation	797
XX.	Wrought-iron Welded Pipes	798
XXI.	Weight of Water at Various Temperatures	799
XXII.	Horse-power per Pound Mean Pressure	800
XXIII.	Water Computation Table	801
XXIV.	Weirs with Perfect End Contraction	803
XXV.	Weirs without End Contraction	803
XXVI.	Electrical Horse-power Table	803
XXVII.	Horse-power of Shafting	804
XXVIII.	Horse-power of Belting	804
	Sample-sheet of Paper	804

I.

UNITED STATES STANDARD WEIGHTS AND MEASURES.

By T. C. MENDENHALL, Superintendent, U. S. Coast Survey.

LINEAR.

	Inches to millimetres.	Feet to Metres.	Yards to Metres.	Miles to Kilometres.
1 =	25.4000	0.304801	0.914402	1.60935
2 =	50.8001	0.609601	1.828804	3.21869
3 =	76.2001	0.914402	2.743205	4.82804
4 =	101.6002	1.219202	3.657607	6.43739
5 =	127.0002	1.524003	4.572009	8.04674
6 =	152.4003	1.828804	5.486411	9.65608
7 =	177.8003	2.133604	6.400813	11.26543
8 =	203.2004	2.438405	7.315215	12.87478
9 =	228.6004	2.743205	8.229616	14.48412

SQUARE.

	Sq. Ins. to Sq. Centimetres.	Square Ft. to Square Decimetres.	Square Yards to Square Metres.	Acres to Hectares.
1 =	6.452	9.290	0.836	0.4047
2 =	12.903	18.581	1.672	0.8094
3 =	19.355	27.871	2.508	1.2141
4 =	25.807	37.161	3.344	1.6187
5 =	32.258	46.452	4.181	2.0234
6 =	38.710	55.742	5.017	2.4281
7 =	45.161	65.032	5.853	2.8328
8 =	51.613	74.323	6.689	3.2375
9 =	58.065	83.613	7.525	3.6422

CUBIC.

	Cu. Ins. to Cubic Centimetres.	Cubic Feet to Cubic Metres.	Cubic Yards to Cubic Metres.	Bushels to Hectolitres.
1 =	16.387	0.02832	0.765	0.35242
2 =	32.774	0.05663	1.529	0.70485
3 =	49.161	0.08495	2.294	1.05727
4 =	65.549	0.11327	3.058	1.40969
5 =	81.936	0.14158	3.823	1.76211
6 =	98.323	0.16990	4.587	2.11454
7 =	114.710	0.19822	5.352	2.46696
8 =	131.097	0.22654	6.116	2.81938
9 =	147.484	0.25485	6.881	3.17181

CAPACITY.

	Fluid Drams to Millilitres or Cu. Centimetres.	Fluid Ounces to Millilitres.	Quarts to Litres.	Gallons to Litres.
1 =	3.70	29.57	0.94636	3.78544
2 =	7.39	59.15	1.89272	7.57088
3 =	11.09	88.72	2.83908	11.35632
4 =	14.79	118.30	3.78544	15.14176
5 =	18.48	147.87	4.73180	18.92720
6 =	22.18	177.44	5.67816	22.71264
7 =	25.88	207.02	6.62452	26.49808
8 =	29.57	236.59	7.57088	30.28352
9 =	33.28	266.16	8.51724	34.06896

WEIGHT.

	Grains to Milligrammes.	Avoirdupois Ounces to Grammes.	Avoirdupois Pounds to Kilogrammes.	Troy Ounces to Grammes.
1 =	64.7989	28.3495	0.45359	31.10348
2 =	129.5978	56.6991	0.90719	62.20696
3 =	194.3968	85.0486	1.36078	93.31044
4 =	259.1957	113.3981	1.81437	124.41392
5 =	323.9946	141.7476	2.26796	155.51740
6 =	388.7935	170.0972	2.72156	186.62089
7 =	453.5924	198.4467	3.17515	217.72437
8 =	518.3914	226.7962	3.62874	248.82785
9 =	583.1903	255.1457	4.08233	279.93133

1 chain = 20.1169 metres
1 square mile = 259 hectares
1 fathom = 1.829 metres
1 nautical mile = 1853.27 metres
1 foot = 0.304801 metre, 9.4840158 log
1 avoir. pound = 453.5924277 gram.
15432.35639 grains = 1 kilogramme

The only authorized material standard of customary length is the Troughton scale belonging to the Coast Survey office, whose length at 59°.62 Fahr. conforms to the British standard. The yard in use in the United States is therefore equal to the British yard.

The only authorized material standard of customary weight is the Troy pound of the Mint. It is of brass of unknown density, and therefore [illegible] standard Troy pound of 1758 by direct comparison. The British Avoirdupois [illegible] and the pound Avoirdupois in use in the United States is equal to the British [illegible]

	Metres to Inches	Metres to Feet.	Metres to Yards.	Kilometres to Miles.
1=	39.3700	3.28083	1.093611	0.62137
2=	78.7400	6.56167	2.187222	1.24274
3=	118.1100	9.84250	3.280833	1.86411
4=	157.4800	13.12333	4.374444	2.48548
5=	196.8500	16.40417	5.468056	3.10685
6=	236.2200	19.68500	6.561667	3.72822
7=	275.5900	22.96583	7.655278	4.34959
8=	314.9600	26.24667	8.748889	4.97096
9=	354.3300	29.52750	9.842500	5.59233

	Sq. Centimetres to Sq. Inches.	Square Metres to Square Feet.	Square Metres to Square Yards.	Hectares to Acres.
1=	0.1550	10.764	1.196	2.471
2=	0.3100	21.528	2.392	4.942
3=	0.4650	32.292	3.588	7.413
4=	0.6200	43.055	4.784	9.884
5=	0.7750	53.819	5.980	12.355
6=	0.9300	64.583	7.176	14.826
7=	1.0850	75.347	8.372	17.297
8=	1.2400	86.111	9.568	19.768
9=	1.3950	96.874	10.764	22.239

CUBIC.

	Cu. Centimetres to Cu. Inches.	Cubic Decimetres to Cubic Inches.	Cubic Metres to Cubic Feet.	Cubic Metres to Cubic Yards.
1=	0.0610	61.023	35.314	1.308
2=	0.1220	122.047	70.629	2.616
3=	0.1831	183.070	105.943	3.924
4=	0.2441	244.093	141.258	5.232
5=	0.3051	305.117	176.572	6.540
6=	0.3661	366.140	211.887	7.848
7=	0.4272	427.163	247.201	9.156
8=	0.4882	488.187	282.516	10.464
9=	0.5492	549.210	317.830	11.771

CAPACITY.

	Millilitres or Cubic Centilitres to Fluid Drams.	Centilitres to Fluid Ounces.	Litres to Quarts.	Dekalitres to Gallons.	Hektolitres to Bushels.
1=	0.27	0.338	1.0567	2.6417	2.8375
2=	0.54	0.676	2.1134	5.2834	5.6750
3=	0.81	1.014	3.1700	7.9251	8.5125
4=	1.08	1.352	4.2267	10.5068	11.3500
5=	1.35	1.691	5.2834	13.2085	14.1875
6=	1.62	2.029	6.3401	15.8502	17.0250
7=	1.89	2.368	7.3968	18.4919	19.8625
8=	2.16	2.706	8.4534	21.1336	22.7000
9=	2.43	3.043	9.5101	23.7753	25.5375

WEIGHT.

	Milligrammes to Grains.	Kilogrammes to Grains.	Hectogrammes (100 grammes) to Ounces Av.	Kilogrammes to Pounds Av.
1=	0.01543	15432.36	3.5274	2.20462
2=	0.03086	30864.71	7.0548	4.40924
3=	0.04630	46297.07	10.5822	6.61386
4=	0.06173	61729.43	14.1096	8.81849
5=	0.07716	77161.78	17.6370	11.02311
6=	0.09259	92594.14	21.1644	13.22773
7=	0.10803	108026.49	24.6918	15.43235
8=	0.12346	123458.85	28.2192	17.63697
9=	0.13889	138891.21	31.7466	19.84159

	Quintals to Pounds Av.	Milliers or Tonnes to Pounds Av.	Grammes to Ounces Troy.
1=	220.46	2204.6	0.03215
2=	440.92	4409.2	0.06430
3=	661.38	6613.8	0.09645
4=	881.84	8818.4	0.12860
5=	1102.30	11023.0	0.16075
6=	1322.76	13227.6	0.19290
7=	1543.22	15432.2	0.22505
8=	1763.68	17636.8	0.25721
9=	1984.14	19841.4	0.28936

By the concurrent action of the principal governments of the world, an International Bureau of Weights and Measures has been established near Paris. Under the direction of the International Committee, two ingots were cast of pure platinum-iridium in the proportion of 9 parts of the former to 1 of the latter metal. From one of these a certain number of kilogrammes were prepared, from the other a definite number of metre bars. These standards of weight and length were intercompared, without preference, and certain ones were selected as International prototype standards. The others were distributed by lot to the different governments, and are called national prototype standards. Those apportioned to the United States are in the keeping of this office.

The metric system was legalized in the United States in 1866.

The International Standard Metre is derived from the Metre des Archives, and its length is defined by the distance between two lines at 0° Centigrade, on a platinum-iridium bar deposited at the International Bureau of Weights and Measures.

The International Standard Kilogramme is a mass of platinum-iridium deposited at the same place, and its weight in vacuo is the same as that of the Kilogramme des Archives.

The litre is equal to a cubic decimetre of water, and it is measured by the quantity of distilled water which, at its maximum density, will counterpoise the standard kilogramme in a vacuum, the volume of such a quantity of water being, as nearly as has been ascertained, equal to a cubic decimetre.

II.

NUMERICAL CONSTANTS.

n	$n\pi$	$n^2\frac{\pi}{4}$	n^2	n^3	$\sqrt{n}$	$\sqrt[3]{n}$
1.0	3.142	0.7854	1.000	1.000	1.0000	1.0000
1.1	3.456	0.9503	1.210	1.331	1.0488	1.0323
1.2	3.770	1.1310	1.440	1.728	1.0955	1.0627
1.3	4.084	1.3273	1.690	2.197	1.1402	1.0914
1.4	4.398	1.5394	1.960	2.744	1.1832	1.1187
1.5	4.712	1.7672	2.250	3.375	1.2247	1.1447
1.6	5.027	2.0106	2.560	4.096	1.2649	1.1696
1.7	5.341	2.2698	2.890	4.913	1.3038	1.1935
1.8	5.655	2.5447	3.240	5.832	1.3416	1.2164
1.9	5.969	2.8353	3.610	6.859	1.3784	1.2386
2.0	6.283	3.1416	4.000	8.000	1.4142	1.2599
2.1	6.597	3.4636	4.410	9.261	1.4491	1.2806
2.2	6.912	3.8013	4.840	10.648	1.4832	1.3006
2.3	7.226	4.1548	5.290	12.167	1.5166	1.3200
2.4	7.540	4.5239	5.760	13.824	1.5492	1.3389
2.5	7.854	4.9087	6.250	15.625	1.5811	1.3572
2.6	8.168	5.3093	6.760	17.576	1.6125	1.3751
2.7	8.482	5.7256	7.290	19.683	1.6432	1.3925
2.8	8.797	6.1575	7.840	21.952	1.6733	1.4095
2.9	9.111	6.6052	8.410	24.389	1.7029	1.4260
3.0	9.425	7.0686	9.00	27.000	1.7321	1.4422
3.1	9.739	7.5477	9.61	29.791	1.7607	1.4581
3.2	10.053	8.0425	10.24	32.768	1.7889	1.4736
3.3	10.367	8.5530	10.89	35.937	1.8166	1.4888
3.4	10.681	9.0792	11.56	39.304	1.8439	1.5037
3.5	10.996	9.6211	12.25	42.875	1.8708	1.5183
3.6	11.310	10.179	12.96	46.656	1.8974	1.5326
3.7	11.624	10.752	13.69	50.653	1.9235	1.5467
3.8	11.938	11.341	14.44	54.872	1.9494	1.5605
3.9	12.252	11.946	15.21	59.319	1.9748	1.5741
4.0	12.566	12.566	16.00	64.000	2.0000	1.5874
4.1	12.881	13.203	16.81	68.921	2.0249	1.6005
4.2	13.195	13.854	17.64	74.088	2.0494	1.6134
4.3	13.509	14.522	18.49	79.507	2.0736	1.6261
4.4	13.823	15.205	19.36	85.184	2.0976	1.6386
4.5	14.137	15.904	20.25	91.125	2.1213	1.6510
4.6	14.451	16.619	21.16	97.336	2.1448	1.6631
4.7	14.765	17.349	22.09	103.823	2.1680	1.6751

CONSTANTS—*Continued.*

n	$n\pi$	$n^2\frac{\pi}{4}$	n^2	n^3	$\sqrt{n}$	$\sqrt[3]{n}$
4.8	15.080	18.096	23.04	110.592	2.1909	1.6869
4.9	15.394	18.857	24.01	117.649	2.2136	1.6985
5.0	15.708	19.635	25.00	125.000	2.2361	1.7100
5.1	16.022	20.428	26.01	132.651	2.2583	1.7213
5.2	16.336	21.237	27.04	140.608	2.2804	1.7325
5.3	16.650	22.062	28.09	148.877	2.3022	1.7435
5.4	16.965	22.902	29.16	157.464	2.3238	1.7544
5.5	17.279	23.758	30.25	166.375	2.3452	1.7652
5.6	17.593	24.630	31.36	175.616	2.3664	1.7758
5.7	17.907	25.518	32.49	185.193	2.3875	1.7863
5.8	18.221	26.421	33.64	195.112	2.4083	1.7967
5.9	18.535	27.340	34.81	205.379	2.4290	1.8070
6.0	18.850	28.274	36.00	216.000	2.4495	1.8171
6.1	19.164	29.225	37.21	226.981	2.4698	1.8272
6.2	19.478	30.191	38.44	238.328	2.4900	1.8371
6.3	19.792	31.173	39.69	250.047	2.5100	1.8469
6.4	20.106	32.170	40.96	262.144	2.5298	1.8566
6.5	20.420	33.183	42.25	274.625	2.5495	1.8663
6.6	20.735	34.212	43.56	287.496	2.5691	1.8758
6.7	21.049	35.257	44.89	300.763	2.5884	1.8852
6.8	21.363	36.317	46.24	314.432	2.6077	1.8945
6.9	21.677	37.393	47.61	328.509	2.6268	1.9038
7.0	21.991	38.485	49.00	343.000	2.6458	1.9129
7.1	22.305	39.592	50.41	357.911	2.6646	1.9220
7.2	22.619	40.715	51.84	373.248	2.6833	1.9310
7.3	22.934	41.854	53.29	389.017	2.7019	1.9399
7.4	23.248	43.008	54.76	405.224	2.7203	1.9487
7.5	23.562	44.179	56.25	421.875	2.7386	1.9574
7.6	23.876	45.365	57.76	438.976	2.7568	1.9661
7.7	24.190	46.566	59.29	456.533	2.7749	1.9747
7.8	24.504	47.784	60.84	474.552	2.7929	1.9832
7.9	24.819	49.017	62.41	493.039	2.8107	1.9916
8.0	25.133	50.266	64.00	512.000	2.8284	2.0000
8.1	25.447	51.530	65.61	531.441	2.8461	2.0083
8.2	25.761	52.810	67.24	551.468	2.8636	2.0165
8.3	26.075	54.106	68.89	571.787	2.8810	2.0247
8.4	26.389	55.418	70.56	592.704	2.8983	2.0328
8.5	26.704	56.745	72.25	614.125	2.9155	2.0408
8.6	27.018	58.088	73.96	636.056	2.9326	2.0488
8.7	27.332	59.447	75.69	658.503	2.9496	2.0567
8.8	27.646	60.821	77.44	681.473	2.9665	2.0646
8.9	27.960	62.211	79.21	704.969	2.9833	2.0724

CONSTANTS—*Continued.*

n	$n\pi$	$n^2\frac{\pi}{4}$	n^2	n^3	$\sqrt{n}$	$\sqrt[3]{n}$
9.0	28.274	63.617	81.00	729.000	3.0000	2.0801
9.1	28.588	65.039	82.81	753.571	3.0166	2.0878
9.2	28.903	66.476	84.64	778.688	3.0332	2.0954
9.3	29.217	67.929	86.49	804.357	3.0496	2.1029
9.4	29.531	69.398	88.36	830.584	3.0659	2.1105
9.5	29.845	70.882	90.25	857.375	3.0822	2.1179
9.6	30.159	72.382	92.16	884.736	3.0984	2.1253
9.7	30.473	73.898	94.09	912.673	3.1145	2.1327
9.8	30.788	75.430	96.04	941.192	3.1305	2.1400
9.9	31.102	76.977	98.01	970.299	3.1464	2.1472
10.0	31.416	78.540	100.00	1000.000	3.1623	2.1544
10.1	31.730	80.119	102.01	1030.301	3.1780	2.1616
10.2	32.044	81.713	104.04	1061.208	3.1937	2.1687
10.3	32.358	83.323	106.09	1092.727	3.2094	2.1757
10.4	32.673	84.949	108.16	1124.863	3.2249	2.1828
10.5	32.987	86.590	110.25	1157.625	3.2404	2.1897
10.6	33.301	88.247	112.36	1191.016	3.2558	2.1967
10.7	33.615	89.920	114.49	1225.043	3.2711	2.2036
10.8	33.929	91.609	116.64	1259.712	3.2863	2.2104
10.9	34.243	93.313	118.81	1295.029	3.3015	2.2172
11.0	34.558	95.033	121.00	1331.000	3.3166	2.2239
11.1	34.872	96.769	123.21	1367.631	3.3317	2.2307
11.2	35.186	98.520	125.44	1404.928	3.3466	2.2374
11.3	35.500	100.29	127.69	1442.897	3.3615	2.2441
11.4	35.814	102.07	129.96	1481.544	3.3764	2.2506
11.5	36.128	103.87	132.25	1520.875	3.3912	2.2572
11.6	36.442	105.68	134.56	1560.896	3.4059	2.2637
11.7	36.757	107.51	136.89	1601.613	3.4205	2.2702
11.8	37.071	109.36	139.24	1643.032	3.4351	2.2766
11.9	37.385	111.22	141.61	1685.159	3.4496	2.2831
12.0	37.699	113.10	144.00	1728.000	3.4641	2.2894
12.1	38.013	114.99	146.41	1771.561	3.4785	2.2957
12.2	38.327	116.90	148.84	1815.848	3.4928	2.3021
12.3	38.642	118.82	151.29	1860.867	3.5071	2.3084
12.4	38.956	120.76	153.76	1906.624	3.5214	2.3146
12.5	39.270	122.72	156.25	1953.125	3.5355	2.3208
12.6	39.584	124.69	158.76	2000.376	3.5496	2.3270
12.7	39.898	126.68	161.29	2048.383	3.5637	2.3331
12.8	40.212	128.68	163.84	2097.152	3.5777	2.3392
12.9	40.527	130.70	166.41	2146.689	3.5917	2.3453
13.0	40.841	132.73	169.00	2197.000	3.6056	2.3513
13.1	41.155	134.78	171.61	2248.091	3.6194	2.3573
13.2	41.469	136.85	174.24	2299.968	3.6332	2.3633

CONSTANTS—*Continued.*

n	$n\pi$	$n^2\frac{\pi}{4}$	n^2	n^3	$\sqrt{n}$	$\sqrt[3]{n}$
13.3	41.783	138.93	176.89	2352.637	3.6169	2.3693
13.4	42.097	141.03	179.56	2406.104	3.6606	2.3752
13.5	42.412	143.14	182.25	2460.375	3.6742	2.3811
13.6	42.726	145.27	184.96	2515.456	3.6878	2.3870
13.7	43.040	147.41	187.69	2571.353	3.7013	2.3928
13.8	43.354	149.57	190.44	2628.072	3.7148	2.3986
13.9	43.668	151.75	193.21	2685.619	3.7283	2.4044
14.0	43.982	153.94	196.00	2744.000	3.7417	2.4101
14.1	44.296	156.15	198.81	2803.221	3.7550	2.4159
14.2	44.611	158.37	201.64	2863.288	3.7683	2.4216
14.3	44.925	160.61	204.49	2924.207	3.7815	2.4272
14.4	45.239	162.86	207.36	2985.984	3.7947	2.4329
14.5	45.553	165.13	210.25	3048.625	3.8079	2.4385
14.6	45.867	167.42	213.16	3112.136	3.8210	2.4441
14.7	46.181	169.72	216.09	3176.523	3.8341	2.4497
14.8	46.496	172.03	219.04	3241.792	3.8471	2.4552
14.9	46.810	174.37	222.01	3307.949	3.8600	2.4607
15.0	47.124	176.72	225.00	3375.000	3.8730	2.4662
15.1	47.438	179.08	228.01	3442.951	3.8859	2.4717
15.2	47.752	181.46	231.04	3511.808	3.8987	2.4772
15.3	48.066	183.85	234.09	3581.577	3.9115	2.4825
15.4	48.381	186.27	237.16	3652.264	3.9243	2.4879
15.5	48.695	188.69	240 25	3723.875	3.9370	2.4933
15.6	49.009	191.13	243.36	3796.416	3.9497	2.4986
15.7	49.323	193.59	246.49	3869.893	3.9623	2.5039
15.8	49.637	196.07	249.64	3944.312	3.9749	2.5092
15.9	49.951	198.56	252.81	4019.679	3.9875	2.5146
16.0	50.265	201.06	256.00	4096.000	4.0000	2.5198
16.1	50.580	203.58	259.21	4173.281	4.0125	2.5251
16.2	50.894	206.12	262.44	4251.528	4.0249	2.5303
16.3	51.208	208.67	265.69	4330.747	4.0373	2.5355
16.4	51.522	211.24	268.96	4410.944	4.0497	2.5406
16.5	51.836	213.83	272.25	4492.125	4.0620	2.5458
16.6	52.150	216.42	275.56	4574.296	4.0743	2.5509
16.7	52.465	219.04	278.89	4657.463	4.0866	2.5561
16.8	52.779	221.67	282.24	4741.632	4.0988	2.5612
16.9	53.093	224.32	285.61	4826.809	4.1110	2.5663
17.0	53.407	226 98	289.00	4913.000	4.1231	2.5713
17.1	53.721	229.66	292.41	5000.211	4.1352	2.5763
17.2	54.035	132.35	295.84	5088.448	4.1473	2.5813
17.3	54.350	235.06	299.29	5177.717	4.1593	2.5863
17.4	54.664	237.79	302.76	5268.024	4.1713	2.5913

CONSTANTS—*Continued.*

n	$n\pi$	$n^2\frac{\pi}{4}$	n^2	n^3	$\sqrt{n}$	$\sqrt[3]{n}$
17.5	54.978	240.53	306.25	5359.375	4.1833	2.5963
17.6	55.292	243.29	309.76	5451.776	4.1952	2.6012
17.7	55.606	246.06	313.29	5545.233	4.2071	2.6061
17.8	55.920	248.85	316.84	5639.752	4.2190	2.6109
17.9	56.235	251.65	320.41	5735.339	4.2308	2.6158
18.0	56.549	254.47	324.00	5832.000	4.2426	2.6207
18.1	56.863	257.30	327.61	5929.741	4.2544	2.6256
18.2	57.177	260.16	331.24	6028.568	4.2661	2.6304
18.3	57.491	263.02	334.89	6128.487	4.2778	2.6352
18.4	57.805	265.90	338.56	6229.504	4.2895	2.6401
18.5	58.119	268.80	342.25	6331.625	4.3012	2.6448
18.6	58.434	271.72	345.96	6434.856	4.3128	2.6495
18.7	58.748	274.65	349.69	6539.203	4.3243	2.6543
18.8	59.062	277.59	353.44	6644.672	4.3359	2.6590
18.9	59.376	280.55	357.21	6751.269	4.3474	2.6637
19.0	59.690	283.53	361.00	6859.000	4.3589	2.6684
19.1	60.004	286.52	364.81	6967.871	4.3703	2.6731
19.2	60.319	289.53	368.64	7077.888	4.3818	2.6777
19.3	60.633	292.55	372.49	7189.057	4.3932	2.6824
19.4	60.947	295.59	376.36	7301.384	4.4045	2.6869
19.5	61.261	298.65	380.25	7414.875	4.4159	2.6916
19.6	61.575	301.72	384.16	7529.536	4.4272	2.6962
19.7	61.889	304.81	388.09	7645.373	4.4385	2.7008
19.8	62.204	307.91	392.04	7762.392	4.4497	2.7053
19.9	62.518	311.03	396.01	7880.599	4.4609	2.7098
20.0	62.832	314.16	400.00	8000.000	4.4721	2.7144
20.1	63.146	317.31	404.01	8120.601	4.4833	2.7189
20.2	63.460	320.47	408.04	8242.408	4.4944	2.7234
20.3	63.774	323.66	412.09	8365.427	4.5055	2.7279
20.4	64.088	326.85	416.16	8489.664	4.5166	2.7324
20.5	64.403	330.06	420.25	8615.125	4.5277	2.7368
20.6	64.717	333.29	424.36	8741.816	4.5387	2.7413
20.7	65.031	336.54	428.49	8869.743	4.5497	2.7457
20.8	65.345	339.80	432.64	8989.912	4.5607	2.7502
20.9	65.659	343.07	436.81	9129.329	4.5716	2.7545
21.0	65.973	346.36	441.00	9261.000	4.5826	2.7589
21.1	66.288	349.67	445.21	9393.931	4.5935	2.7633
21.2	66.602	352.99	449.44	9528.128	4.6043	2.7676
21.3	66.916	356.33	453.69	9663.597	4.6152	2.7720
21.4	67.230	359.68	457.96	9800.344	4.6260	2.7763
21.5	67.544	363.05	462.25	9938.375	4.6368	2.7806
21.6	67.858	366.44	466.56	10077.696	4.6476	2.7849
21.7	68.173	369.84	470.89	10218.313	4.6585	2.7895

CONSTANTS—*Continued.*

n	$n\pi$	$n^2\frac{\pi}{4}$	n^2	n^3	$\sqrt{n}$	$\sqrt[3]{n}$
21.8	68.487	373.25	475.24	10360.232	4.6690	2.7935
21.9	68.801	376.69	479.61	10503.459	4.6797	2.7978
22.0	69.115	380.13	484.00	10648.000	4.6904	2.8021
22.1	69.429	383.60	488.41	10793.861	4.7011	2.8063
22.2	69.743	387.08	492.84	10941.048	4.7117	2.8105
22.3	70.058	390.57	497.29	11089.567	4.7223	2.8147
22.4	70.372	394.08	501.76	11239.424	4.7329	2.8189
22.5	70.686	397.61	506.25	11390.625	4.7434	2.8231
22.6	71.000	401.15	510.76	11543.176	4.7539	2.8273
22.7	71.314	404.71	515.29	11697.083	4.7644	2.8314
22.8	71.268	408.28	519.84	11852.352	4.7749	2.8356
22.9	71.942	411.87	524.41	12008.989	4.7854	2.8397
23.0	72.257	415.48	529.00	12167.000	4.7953	2.8438
23.1	72.571	419.10	533.61	12326.391	4.8062	2.8479
23.2	72.885	422.73	538.24	12487.168	4.8166	2.8521
23.3	73.199	426.39	542.89	12649.337	4.8270	2.8562
23.4	73.513	430.05	547.56	12812.904	4.8373	2.8603
23.5	73.827	433.74	552.25	12977.875	4.8477	2.8643
23.6	74.142	437.44	556.96	13144.256	4.8580	2.8684
23.7	74.456	441.15	561.69	13312.053	4.8683	2.8724
23.8	74.770	444.88	566.44	13481.272	4.8785	2.8765
23.9	75.084	448.63	571.21	13651.919	4.8888	2.8805
24.0	75.398	452.39	576.00	13824.000	4.8990	2.8845
24.1	75.712	456.17	580.81	13997.521	4.9092	2.8885
24.2	76.027	459.96	585.64	14172.488	4.9193	2.8925
24.3	76.341	463.77	590.49	14348.907	4.9295	2.8965
24.4	76.655	467.60	595.36	14526.784	4.9396	2.9004
24.5	76.969	471.44	600.25	14706.125	4.9497	2.9044
24.6	77.283	475.29	605.16	14886.936	4.9598	2.9083
24.7	77.597	479.16	610.09	15069.223	4.9699	2.9123
24.8	77.911	483.05	615.04	15252.992	4.9799	2.9162
24.9	78.226	486.96	620.01	15438.249	4.9899	2.9201
25.0	78.540	490.87	625.00	15625.000	5.0000	2.9241
25.1	78.854	494.81	630.01	15813.251	5.0099	2.9279
25.2	79.168	498.76	635.04	16003.008	5.0199	2.9318
25.3	79.482	502.73	640.09	16194.277	5.0299	2.9356
25.4	79.796	506.71	645.16	16387.064	5.0398	2.9395
25.5	80.111	510.71	650.25	16581.375	5.0497	2.9434
25.6	80.425	514.72	655.36	16777.216	5.0596	2.9472
25.7	80.739	518.75	660.49	16974.593	5.0695	2.9510
25.8	81.053	522.79	665.64	17173.512	5.0793	2.9549
25.9	81.367	526.85	670.81	17373.979	5.0892	2.9586

CONSTANTS—*Continued.*

n	$n\pi$	$n^2\frac{\pi}{4}$	n^2	n^3	$\sqrt{n}$	$\sqrt[3]{n}$
26.0	81.681	530.93	676.00	17576.000	5.0990	2.9624
26.1	81.996	535.02	681.21	17779.581	5.1088	2.9662
26.2	82.310	539.13	686.44	17984.728	5.1185	2.9701
26.3	82.624	543.25	691.69	18191.447	5.1283	2.9738
26.4	82.938	547.39	696.96	18399.744	5.1380	2.9776
26.5	83.252	551.55	702.25	18609.625	5.1478	2.9814
26.6	83.566	555.72	707.56	18821.096	5.1575	2.9851
26.7	83.881	559.90	712.89	19034.163	5.1672	2.9888
26.8	84.195	564.10	718.24	19248.832	5.1768	2.9926
26.9	84.509	568.32	723.61	19465.109	5.1865	2.9963
27.0	84.823	572.56	729.00	19683.000	5.1962	3.0000
27.1	85.137	576.80	734.41	19902.511	5.2057	3.0037
27.2	85.451	581.07	739.84	20123.648	5.2153	3.0074
27.3	85.765	585.35	745.29	20346.417	5.2249	3.0111
27.4	86.080	589.65	750.76	20570.824	5.2345	3.0147
27.5	86.394	593.96	756.25	20796.875	5.2440	3.0184
27.6	86.708	598.29	761.76	21024.576	5.2535	3.0221
27.7	87.022	602.63	767.29	21253.933	5.2630	3.0257
27.8	87.336	606.99	772.84	21484.952	5.2725	3.0293
27.9	87.650	611.36	778.41	21717.639	5.2820	3.0330
28.0	87.965	615.75	784.00	21952.000	5.2915	3.0366
28.1	88.279	620.16	789.61	22188.041	5.3009	3.0402
28.2	88.593	624.58	795.24	2242..768	5.3103	3.0438
28.3	88.907	629.02	800.89	22 65.187	5.3197	3.0474
28.4	89.221	633.47	806.56	22906.304	5.3291	3.0510
28.5	89.535	637.94	812.25	23149.125	5.3385	3.0546
28.6	89.850	642.42	817.96	23393.656	5.3478	3.0581
28.7	90.164	646.93	823.69	23639.903	5.3572	3.0617
28.8	90.478	651.44	829.44	23887.872	5.3665	3.0652
28.9	90.792	655.97	835.21	24137.569	5.3758	3.0688
29.0	91.106	660.52	841.00	24389.000	5.3852	3.0723
29.1	91.420	665.08	846.81	24642.171	5.3944	3.0758
29.2	91.735	669.66	852.64	24897.088	5.4037	3.0794
29.3	92.049	674.26	858.49	25153.757	5.4129	3.0829
29.4	92.363	678.87	864.36	25412.184	5.4221	3.0864
29.5	92.677	683.49	870.25	25672.375	5.4313	3.0899
29.6	92.991	688.13	876.16	25934.336	5.4405	3.0934
29.7	93.305	692.79	882.09	26198.073	5.4497	3.0968
29.8	93.619	697.47	888.04	26463.592	5.4589	3.1003
29.9	93.934	702.15	894.01	26730.899	5.4680	3.1038
30.0	94.248	706.86	900.00	27000.000	5.4772	3.1072
30.1	94.562	711.58	906.01	27270.901	5.4863	3.1107
30.2	94.876	716.32	912.04	27543.608	5.4954	3.1141

CONSTANTS—*Continued.*

n	$n\pi$	$n^2\frac{\pi}{4}$	n^2	n^3	$\sqrt{n}$	$\sqrt[3]{n}$
30.3	95.190	721.07	918.09	27818.127	5.5045	3.1176
30.4	95.505	725.83	924.16	28094.464	5.5136	3.1210
30.5	95.819	730.62	930.25	28372.625	5.5226	3.1244
30.6	96.133	735.42	936.36	28652.616	5.5317	3.1278
30.7	96.447	740.23	942.49	28934.443	5.5407	3.1312
30.8	96.761	745.06	948.64	29218.112	5.5497	3.1346
30.9	97.075	749.91	954.81	29503.629	5.5587	3.1380
31.0	97.389	754.77	961.00	29791.000	5.5678	3.1414
31.1	97.704	759.65	967.21	30080.231	5.5767	3.1448
31.2	98.018	764.54	973.44	30371.328	5.5857	3.1481
31.3	98.332	769.45	979.69	30664.297	5.5946	3.1515
31.4	98.646	774.37	985.96	30959.144	5.6035	3.1548
31.5	98.960	779.31	992.25	31255.875	5.6124	3.1582
31.6	99.274	784.27	998.56	31554.496	5.6213	3.1615
31.7	99.588	789.24	1004.89	31855.013	5.6302	3.1648
31.8	99.903	794.23	1011.24	32157.432	5.6391	3.1681
31.9	100.22	799.23	1017.61	32461.759	5.6480	3.1715
32.0	100.53	804.25	1024.00	32768.000	5.6569	3.1748
32.1	100.85	809.28	1030.41	33076.161	5.6656	3.1781
32.2	101.16	814.33	1036.84	33386.248	5.6745	3.1814
32.3	101.47	819.40	1043.29	33698.267	5.6833	3.1847
32.4	101.79	824.48	1049.76	34012.224	5.6921	3.1880
32.5	102.10	829.58	1056.25	34328.125	5.7008	3.1913
32.6	102.42	834.69	1062.76	34645.976	5.7096	3.1945
32.7	102.73	839.82	1069.29	34965.783	5.7183	3.1978
32.8	103.04	844.96	1075.84	35287.552	5.7271	3.2010
32.9	103.36	850.12	1082.41	35611.289	5.7358	3.2043
33.0	103.67	855.30	1089.00	35937.000	5.7446	3.2075
33.1	103.99	860.49	1095.61	36264.691	5.7532	3.2108
33.2	104.30	865.70	1102.24	36594 368	5.7619	3.2140
33.3	104.62	870.92	1108.89	36926.037	5.7706	3.2172
33.4	104.93	876.16	1115.56	37259.704	5.7792	3.2204
33.5	105.24	881.41	1122.25	37595.375	5.7879	3.2237
33.6	105.56	886.68	1128.96	37933.056	5.7965	3.2269
33.7	105.87	891.97	1135.69	38272.753	5.8051	3.2301
33.8	106.19	897.27	1142.44	38614.472	5.8137	3.2332
33.9	106.50	902.59	1149.21	38958.219	5.8223	3.2364
34.0	106.81	907.92	1156.00	39304.000	5.8310	3.2396
34.1	107.13	913.27	1162.81	39651.821	5.8395	3.2428
34.2	107.44	918.63	1169.64	40001.688	5.8480	3.2460
34.3	107.76	924.01	1176.49	40353.607	5.8566	3.2491
34.4	108.07	929.41	1183.36	40707.584	5.8651	3.2522

CONSTANTS—*Continued.*

n	$n\pi$	$n^2\frac{\pi}{4}$	n^2	n^3	$\sqrt{n}$	$\sqrt[3]{n}$
34.5	108.38	934.82	1190.25	41063.625	5.8736	3.2554
34.6	108.70	940.25	1197.16	41421.736	5.8821	3.2586
34.7	109.01	945.69	1204.09	41781.923	5.8906	3.2617
34.8	109.33	951.15	1211.04	42144.192	5.8991	3.2648
34.9	109.64	956.62	1218.01	42508.549	5.9076	3.2679
35.0	109.96	962.11	1225.00	42875.000	5.9161	3.2710
35.1	110.27	967.62	1232.01	43243.551	5.9245	3.2742
35.2	110.58	973.14	1239.04	43614.208	5.9329	3.2773
35.3	110.90	978.68	1246.09	43986.977	5.9413	3.2804
35.4	111.21	984.23	1253.16	44361.864	5.9497	3.2835
35.5	111.53	989.80	1260.25	44738.875	5.9581	3.2866
35.6	111.84	995.38	1267.36	45118.016	5.9665	3.2897
35.7	112.15	1000.98	1274.49	45499.293	5.9749	3.2927
35.8	112.47	1006.60	1281.64	45882.712	5.9833	3.2958
35.9	112.78	1012.23	1288.81	46268.279	5.9916	3.2989
36.0	113.10	1017.88	1296.00	46656.000	6.0000	3.3019
36.1	113.41	1023.54	1303.21	47045.881	6.0083	3.3050
36.2	113.73	1029.22	1310.44	47437.928	6.0166	3.3080
36.3	114.04	1034.91	1317.69	47832.147	6.0249	3.3111
36.4	114.35	1040.62	1324.96	48228.544	6.0332	3.3141
39.5	114.67	1046.35	1332.25	48627.125	6.0415	3.3171
36.6	114.98	1052.09	1339.56	49027.896	6.0497	3.3202
36.7	115.30	1057.84	1346.89	49430.863	6.0580	3.3232
36.8	115.61	1063.62	1354.24	49836.032	6.0663	3.3262
36.9	115.92	1069.41	1361.61	50243.409	6.0745	3.3292
37.0	116.24	1075.21	1369.00	50653.000	6.0827	3.3322
37.1	116.55	1081.03	1376.41	51064.811	6.0909	3.3352
37.2	116.87	1086.87	1383.84	51478.848	6.0991	3.3382
37.3	117.18	1092.72	1391.29	51895.117	6.1073	3.3412
37.4	117.50	1098.58	1398.76	52313.624	6.1155	3.3442
37.5	117.81	1104.47	1406.25	52734.375	6.1237	3.3472
37.6	118.12	1110.36	1413.76	53157.376	6.1318	3.3501
37.7	118.44	1116.28	1421.29	53582.633	6.1400	3.3531
37.8	118.75	1122.21	1428.84	54010.152	6.1481	3.3561
37.9	119.07	1128.15	1436.41	54439.939	6.1563	3.3590
38.0	119.38	1134.11	1444.00	54872.000	6.1644	3.3620
38.1	119.69	1140.09	1451.61	55306.341	6.1725	3.3649
38.2	120.01	1146.08	1459.24	55742.968	6.1806	3.3679
38.3	120.32	1152.09	1466.89	56181.887	6.1887	3.3708
38.4	120.64	1158.12	1474.56	56623.104	6.1967	3.3737
38.5	120.95	1164.16	1482.25	57066.625	6.2048	3.3767
38.6	121.27	1170.21	1489.96	57512.456	6.2129	3.3796
38.7	121.58	1176.28	1497.69	57960.603	6.2209	3.3825

CONSTANTS—*Continued.*

n	$n\pi$	$n^2\frac{\pi}{4}$	n^2	n^3	$\sqrt{n}$	$\sqrt[3]{n}$
38.8	121.89	1182.37	1505.44	58411.072	6.2289	3.3854
38.9	122.21	1188.47	1513.21	58863.869	6.2370	3.3883
39.0	122.52	1194.59	1521.00	59319.000	6.2450	3.3912
39.1	122.84	1200.72	1528.81	59776.471	6.2530	3.3941
39.2	123.15	1206.87	1536.64	60236.288	6.2610	3.3970
39.3	123.46	1213.04	1544.49	60698.457	6.2689	3.3999
39.4	123.78	1219.22	1552.36	61162.984	6.2769	3.4028
39.5	124.09	1225.42	1560.25	61629.875	6.2849	3.4056
39.6	124.41	1231.63	1568.16	62099.136	6.2928	3.4085
39.7	124.72	1237.86	1576.09	62570.773	6.3008	3.4114
39.8	125.04	1244.10	1584.04	63044.792	6.3087	3.4142
39.9	125.35	1250.36	1592.01	63521.199	6.3166	3.4171
40.0	125.66	1256.64	1600.00	64000.000	6.3245	3.4200
40.1	125.98	1262.93	1608.01	64481.201	6.3325	3.4228
40.2	126.29	1269.23	1616.04	64964.808	6.3404	3.4256
40.3	126.61	1275.56	1624.09	65450.827	6.3482	3.4285
40.4	126.92	1281.90	1632.16	65939.264	6.3561	3.4313
40.5	127.23	1288.25	1640.25	66430.125	6.3639	3.4341
40.6	127.55	1294.62	1648.36	66923.416	6.3718	3.4370
40.7	127.86	1301.00	1656.49	67419.143	6.3796	3.4398
40.8	128.18	1307.41	1664.64	67911.312	6.3875	3.4426
40.9	128.49	1313.82	1672.81	68417.929	6.3953	3.4454
41.0	128.81	1320.25	1681.00	68921.000	6.4031	3.4482
41.1	129.12	1326.70	1689.21	69426.531	6.4109	3.4510
41.2	129.43	1333.17	1697.44	69934.528	6.4187	3.4538
41.3	129.75	1339.65	1705.69	70444.997	6.4265	3.4566
41.4	130.06	1346.14	1713.96	70957.944	6.4343	3.4594
41.5	130.38	1352.65	1722.25	71473.375	6.4421	3.4622
41.6	130.69	1359.18	1730.56	71991.296	6.4498	3.4650
41.7	131.00	1365.72	1738.89	72511.713	6.4575	3.4677
41.8	131.32	1372.28	1747.24	73034.632	6.4653	3.4705
41.9	131.63	1378.85	1755.61	73560.059	6.4730	3.4733
42.0	131.95	1385.44	1764.00	74088.000	6.4807	3.4760
42.1	132.26	1392.05	1772.41	74618.461	6.4884	3.4788
42.2	132.58	1398.67	1780.84	75151.448	6.4961	3.4815
42.3	132.89	1405.31	1789.29	75686.967	6.5038	3.4843
42.4	133.20	1411.96	1797.76	76225.024	6.5115	3.4870
42.5	133.52	1418.63	1806.25	76765.625	6.5192	3.4898
42.6	133.83	1425.31	1814.76	77308.776	6.5268	3.4925
42.7	134.15	1432.01	1823.29	77854.483	6.5345	3.4952
42.8	134.46	1438.72	1831.84	78402.752	6.5422	3.4980
42.9	134.77	1445.45	1840.41	78953.589	6.5498	3.5007

CONSTANTS—*Continued.*

n	$n\pi$	$n^2\frac{\pi}{4}$	n^2	n^3	$\sqrt{n}$	$\sqrt[3]{n}$
43.0	135.09	1452.20	1849.00	79507.000	6.5574	3.5034
43.1	135.40	1458.96	1857.61	80062.991	6.5651	3.5061
43.2	135.72	1465.74	1866.24	80621.568	6.5727	3.5088
43.3	136.03	1472.54	1874.89	81182.737	6.5803	3.5115
43.4	136.35	1479.34	1883.56	81746.504	6.5879	3.5142
43.5	136.66	1486.17	1892.25	82312.875	6.5954	3.5169
43.6	136.97	1493.01	1900.96	82881.856	6.6030	3.5196
43.7	137.29	1499.87	1909.69	83453.453	6.6106	3.5223
43.8	137.60	1506.74	1918.44	84027.672	6.6182	3.5250
43.9	137.92	1513.63	1927.21	84604.519	6.6257	3.5277
44.0	138.23	1520.53	1936.00	85184.000	6.6333	3.5303
44.1	138.54	1527.45	1944.81	85766.121	6.6408	3.5330
44.2	138.86	1534.39	1953.64	86350.888	6.6483	3.5357
44.3	139.17	1541.34	1962.49	86938.307	6.6558	3.5384
44.4	139.49	1548.30	1971.36	87528.384	6.6633	3.5410
44.5	139.80	1555.28	1980.25	88121.125	6.6708	3.5437
44.6	140.12	1562.28	1989.16	88716.536	6.6783	3.5463
44.7	140.43	1569.30	1998.09	89314.623	6.6858	3.5490
44.8	140.74	1576.33	2007.04	89915.392	6.6933	3.5516
44.9	141.06	1583.37	2016.01	90518.849	6.7007	3.5543
45.0	141.37	1590.43	2025.00	91125.000	6.7082	3.5569
45.1	141.69	1597.51	2034.01	91733.851	6.7156	3.5595
45.2	142.00	1604.60	2043.04	92345.408	6.7231	3.5621
45.3	142.31	1611.71	2052.09	92959.677	6.7305	3.5648
45.4	142.63	1618.83	2061.16	93576.664	6.7379	3.5674
45.5	142.94	1625.97	2070.25	94196.375	6.7454	3.5700
45.6	143.26	1633.13	2079.36	94818.816	6.7528	3.5726
45.7	143.57	1640.30	2088.49	95443.993	6.7602	3.5752
45.8	143.88	1647.48	2097.64	96071.912	6.7676	3.5778
45.9	144.20	1654.68	2106.81	96702.579	6.7749	3.5805
46.0	144.51	1661.90	2116.00	97336.000	6.7823	3.5830
46.1	144.83	1669.14	2125.21	97972.181	6.7897	3.5856
46.2	145.14	1676.39	2134.44	98611.128	6.7971	3.5882
46.3	145.46	1683.65	2143.69	99252.347	6.8044	3.5908
46.4	145.77	1690.93	2152.96	99897.344	6.8117	3.5934
46.5	146.08	1698.23	2162.25	100544.625	6.8191	3.5960
46.6	146.40	1705.54	2171.56	101194.696	6.8264	3.5986
46.7	146.71	1712.87	2180.89	101847.563	6.8337	3.6011
46.8	147.03	1720.21	2190.24	102503.232	6.8410	3.6037
46.9	147.34	1727.57	2199.61	103161.709	6.8484	3.6063
47.0	147.65	1734.94	2209.00	103823.000	6.8556	3.6088
47.1	147.97	1742.34	2218.41	104487.111	6.8629	3.6114
47.2	148.28	1749.74	2227.84	105154.048	6.8702	3.6139

CONSTANTS—*Continued.*

n	$n\pi$	$n^2\frac{\pi}{4}$	n^2	n^3	$\sqrt{n}$	$\sqrt[3]{n}$
47.3	148.60	1757.16	2237.29	105823.817	6.8775	3.6165
47.4	148.91	1764.60	2246.76	106496.424	6.8847	3.6190
47.5	149.23	1772.05	2256.25	107171.875	6.8920	3.6216
47.6	149.54	1779.52	2265.76	107850.176	6.8993	3.6241
47.7	149.85	1787.01	2275.29	108531.333	6.9065	3.6267
47.8	150.17	1794.51	2284.84	109215.352	6.9137	3.6292
47.9	150.48	1802.03	2294.41	109902.239	6.9209	3.6317
48.0	150.80	1809.56	2304.00	110592.000	6.9282	3.6342
48.1	151.11	1817.11	2313.61	111284.641	6.9354	3.6368
48.2	151.42	1824.67	2323.24	111980.168	6.9426	3.6393
48.3	151.74	1832.25	2332.89	112678.587	6.9498	3.6418
48.4	152.05	1839.84	2342.56	113379.904	6.9570	3.6443
48.5	152.37	1847.45	2352.25	114084.125	6.9642	3.6468
48.6	152.68	1855.08	2361.96	114791.256	6.9714	3.6493
48.7	153.00	1862.72	2371.69	115501.303	6.9785	3.6518
48.8	153.31	1870.38	2381.44	116214.272	6.9857	3.6543
48.9	153.62	1878.05	2391.21	116930.169	6.9928	3.6568
49.0	153.94	1885.74	2401.00	117649.000	7.0000	3.6593
49.1	154.25	1893.45	2410.81	118370.771	7.0071	3.6618
49.2	154.57	1901.17	2420.64	119095.488	7.0143	3.6643
49.3	154.88	1908.90	2430.49	119823.157	7.0214	3.6668
49.4	155.19	1916.65	2440.36	120553.784	7.0285	3.6692
49.5	155.51	1924.42	2450.25	121287.375	7.0356	3.6717
49.6	155.82	1932.21	2460.16	122023.936	7.0427	3.6742
49.7	156.14	1940.00	2470.09	122763.473	7.0498	3.6767
49.8	156.45	1947.82	2480.04	123505.992	7.0569	3.6791
49.9	156.77	1955.65	2490.01	124251.499	7.0640	3.6816
50.0	157.08	1963.50	2500.00	125000.000	7.0711	3.6840
51.0	160.22	2042.82	2601.00	132651.000	7.1414	3.7084
52.0	163.36	2123.72	2704.00	140608.000	7.2111	3.7325
53.0	166.50	2206.19	2809.00	148877.000	7.2801	3.7563
54.0	169.64	2290.22	2916.00	157464.000	7.3485	3.7798
55.0	172.78	2375.83	3025.00	166375.000	7.4162	3.8030
56.0	175 93	2463.01	3136.00	175616.000	7.4833	3.8259
57.0	179.07	2551.76	3249.00	185193.000	7.5498	3.8485
58.0	182.21	2642.08	3364.00	195112.000	7.6158	3.8709
59.0	185.35	2733.97	3481.00	205379.000	7.6811	3.8930
60.0	188.49	2827.44	3600.00	216000.000	7.7460	3.9149
61 0	191.63	2922.47	3721.00	226981.000	7.8102	3.9365
62.0	194.77	3019.07	3844.00	238328.000	7.8740	3.9579
63.0	197.92	3117.25	3969.00	250047.000	7.9373	3.9791
64.0	201.06	3216.99	4096.00	262144.000	8.0000	4.0000
65.0	204.20	3318.31	4225.00	274625.000	8.0623	4.0207
66.0	207.34	3421.20	4356.00	287496.000	8.1240	4.0412

CONSTANTS—*Continued.*

n	$n\pi$	$n^2\frac{\pi}{4}$	n^3	n^4	$\sqrt{n}$	$\sqrt[3]{n}$
67.0	210.48	3525.66	4489.00	300763.000	8.1854	4.0615
68.0	213.63	3631.69	4624.00	314432.000	8.2462	4.0817
69.0	216.77	3739.29	4761.00	328509.000	8.3066	4.1016
70.0	219.91	3848.46	4900.00	343000.000	8.3666	4.1213
71.0	223.05	3959.20	5041.00	357911.000	8.4261	4.1408
72.0	226.19	4071.51	5184.00	373248.000	8.4853	4.1602
73.0	229.33	4185.39	5329.00	389017.000	8.5440	4.1793
74.0	232.47	4300.85	5476.00	405224.000	8.6023	4.1983
75.0	235.62	4417.87	5625.00	421875.000	8.6603	4.2172
76.0	238.76	4536.47	5776.00	438976.000	8.7178	4.2358
77.0	241.90	4656.63	5929 00	456533.000	8.7750	4.2543
78.0	245.04	4778.37	6084.00	474552.000	8. 318	4.2727
79.0	248.18	4901.68	6241.00	493039.000	8.8882	4.2908
80.0	251.32	5026.56	6400.00	512000.000	8.9443	4.3089
81.0	254.47	5153.01	6561.00	531441.000	9.0000	4.3267
82.0	257.61	5281.03	6724.00	551368.000	9.0554	4.3445
83.0	260.75	5410.62	6889.00	571787.000	9.1104	4.3621
84.0	263.89	5541.78	7056.00	592704.000	9.1652	4.3795
85.0	267.03	5674.50	7225.00	614125.000	9.2195	4.3968
86.0	270.17	5808.81	7396.00	636056.000	9.2736	4.4140
87.0	273.32	5944.69	7569.00	658503.000	9.3274	4.4310
88.0	276.46	6082.13	7744.00	681472.000	9.3808	4.4480
89.0	279.60	6221.13	7921.00	704969.000	9.4340	4.4647
90.0	282.74	6361.74	8100.00	729000.000	9.4868	4.4814
91.0	285.88	6503.89	8281.00	753571.000	9.5394	4.4979
92.0	289.02	6647.62	8464.00	778688.000	9.5917	4.5144
93.0	292.17	6792.92	8649.00	804357.000	9.6437	4.5307
94.0	295.31	6939.78	8836.00	830584.000	9.6954	4.5468
95.0	298.45	7088.23	9025.00	857375.000	9.7468	4.5629
96.0	301.59	7238.24	9216.00	884736.000	9.7980	4.5789
97.0	304.73	7389.83	9409.00	912673.000	9.8489	4.5947
98.0	307.87	7542.98	9604.00	941192.000	9.8995	4.6104
99.0	311.02	7697.68	9801.00	970299.000	9.9499	4.6261
100.0	314.16	7854.00	10000.00	1000000.000	10.0000	4.6416

III.

LOGARITHMS OF NUMBERS.

No.	0	1	2	3	4	5	6	7	8	9
10	0000	0043	0086	0128	0170	0212	0253	0294	0334	0374
11	0414	0453	0492	0531	0569	0607	0645	0682	0719	0755
12	0792	0828	0864	0899	0934	0969	1004	1038	1072	1106
13	1139	1173	1206	1239	1271	1303	1335	1367	1399	1430
14	1461	1492	1523	1553	1584	1614	1644	1673	1703	1732
15	1761	1790	1818	1847	1875	1903	1931	1959	1987	2014
16	2041	2068	2095	2122	2148	2175	2201	2227	2253	2279
17	2304	2330	2355	2380	2405	2430	2455	2480	2504	2529
18	2553	2577	2601	2625	2648	2672	2695	2718	2742	2765
19	2788	2810	2833	2856	2878	2900	2923	2945	2967	2989
20	3010	3032	3054	3075	3096	3118	3139	3160	3181	3201
21	3222	3243	3263	3284	3304	3324	3345	3365	3385	3404
22	3424	3444	3464	3483	3502	3522	3541	3560	3579	3598
23	3617	3636	3655	3674	3692	3711	3729	3747	3766	3784
24	3802	3820	3838	3856	3874	3892	3909	3927	3945	3962
25	3979	3997	4014	4031	4048	4065	4082	4099	4116	4133
26	4150	4166	4183	4200	4216	4232	4249	4265	4281	4298
27	4314	4330	4346	4362	4378	4393	4409	4425	4440	4456
28	4472	4487	4502	4518	4533	4548	4564	4579	4594	4609
29	4624	4639	4654	4669	4683	4698	4713	4728	4742	4757
30	4771	4786	4800	4814	4829	4843	4857	4871	4886	4900
31	4914	4928	4942	4955	4969	4983	4997	5011	5024	5038
32	5051	5065	5079	5092	5105	5119	5132	5145	5159	5172
33	5185	5198	5211	5224	5237	5250	5263	5276	5289	5302
34	5315	5328	5340	5353	5366	5378	5391	5403	5416	5428
35	5441	5453	5465	5478	5490	5502	5514	5527	5539	5551
36	5563	5575	5587	5599	5611	5623	5635	5647	5658	5670
37	5682	5694	5705	5717	5729	5740	5752	5763	5775	5786
38	5798	5809	5821	5832	5843	5855	5866	5877	5888	5899
39	5911	5922	5933	5944	5955	5966	5977	5988	5999	6010
40	6021	6031	6042	6053	6064	6075	6085	6096	6107	6117
41	6128	6138	6149	6160	6170	6180	6191	6201	6212	6222
42	6232	6243	6253	6263	6274	6284	6294	6304	6314	6325
43	6335	6345	6355	6365	6375	6385	6395	6405	6415	6425
44	6435	6444	6454	6464	6474	6484	6493	6503	6513	6522
45	6532	6542	6551	6561	6571	6580	6590	6599	6609	6618
46	6628	6637	6646	6656	6665	6675	6684	6693	6702	6712
47	6721	6730	6739	6749	6758	6767	6776	6785	6794	6803
48	6812	6821	6830	6839	6848	6857	6866	6875	6884	6893
49	6902	6911	6920	6928	6937	6946	6955	6964	6972	6981
50	6990	6998	7007	7016	7024	7033	7042	7050	7059	7067
51	7076	7084	7093	7101	7110	7118	7126	7135	7143	7152
52	7160	7168	7177	7185	7193	7202	7210	7218	7226	7235
53	7243	7251	7259	7267	7275	7284	7292	7300	7308	7316
54	7324	7332	7340	7348	7356	7364	7372	7380	7388	7396
No.	0	1	2	3	4	5	6	7	8	9

Digitized by Google

LOGARITHMS OF NUMBERS—*Continued.*

No.	0	1	2	3	4	5	6	7	8	9
55	7404	7412	7419	7427	7435	7443	7451	7459	7466	7474
56	7482	7490	7497	7505	7513	7520	7528	7536	7543	7551
57	7559	7566	7574	7582	7589	7597	7604	7612	7619	7627
58	7634	7642	7649	7657	7664	7672	7679	7686	7694	7701
59	7709	7716	7723	7731	7738	7745	7752	7760	7767	7774
60	7782	7789	7796	7803	7810	7818	7825	7832	7839	7846
61	7853	7860	7868	7875	7882	7889	7896	7903	7910	7917
62	7924	7931	7938	7945	7952	7959	7966	7973	7980	7987
63	7993	8000	8007	8014	8021	8028	8035	8041	8048	8055
64	8062	8069	8075	8082	8089	8096	8102	8109	8116	8122
65	8129	8136	8142	8149	8156	8162	8169	8176	8182	8189
66	8195	8202	8209	8215	8222	8228	8235	8241	8248	8254
67	8261	8267	8274	8280	8287	8293	8299	8306	8312	8319
68	8325	8331	8338	8344	8351	8357	8363	8370	8376	8382
69	8388	8395	8401	8407	8414	8420	8426	8432	8439	8445
70	8451	8457	8463	8470	8476	8482	8488	8494	8500	8506
71	8513	8519	8525	8531	8537	8543	8549	8555	8561	8567
72	8573	8579	8585	8591	8597	8603	8609	8615	8621	8627
73	8633	8639	8645	8651	8657	8663	8669	8675	8681	8686
74	8692	8698	8704	8710	8716	8722	8727	8733	8739	8745
75	8751	8756	8762	8768	8774	8779	8785	8791	8797	8802
76	8808	8814	8820	8825	8831	8837	8842	8848	8854	8859
77	8865	8871	8876	8882	8887	8893	8899	8904	8910	8915
78	8921	8927	8932	8938	8943	8949	8954	8960	8965	8971
79	8976	8982	8987	8993	8998	9004	9009	9015	9020	9025
80	9031	9036	9042	9047	9053	9058	9063	9069	9074	9079
81	9085	9090	9096	9101	9106	9112	9117	9122	9128	9133
82	9138	9143	9149	9154	9159	9165	9170	9175	9180	9186
83	9191	9196	9201	9206	9212	9217	9222	9227	9232	9238
84	9243	9248	9253	9258	9263	9269	9274	9279	9284	9289
85	9294	9299	9304	9309	9315	9320	9325	9330	9335	9340
86	9345	9350	9355	9360	9365	9370	9375	9380	9385	9390
87	9395	9400	9405	9410	9415	9420	9425	9430	9435	9440
88	9445	9450	9455	9460	9465	9469	9474	9479	9484	9489
89	9494	9499	9504	9509	9513	9518	9523	9528	9533	9538
90	9542	9547	9552	9557	9562	9566	9571	9576	9581	9586
91	9590	9595	9600	9605	9609	9614	9619	9624	9628	9633
92	9638	9643	9647	9652	9657	9661	9666	9671	9675	9680
93	9685	9689	9694	9699	9703	9708	9713	9717	9722	9727
94	9731	9736	9741	9745	9750	9754	9759	9763	9768	9773
95	9777	9782	9786	9791	9795	9800	9805	9809	9814	9818
96	9823	9827	9832	9836	9841	9845	9850	9854	9859	9863
97	9868	9872	9877	9881	9886	9890	9894	9899	9903	9908
98	9912	9917	9921	9926	9930	9934	9939	9943	9948	9952
99	9956	9961	9965	9969	9974	9978	9983	9987	9991	9996
No.	0	1	2	3	4	5	6	7	8	9

IV.

LOGARITHMIC FUNCTIONS OF ANGLES.

Angle.	Sin.	D. 1′.	Cos.	D. 1′.	Tan.	D. 1′.	Cot.	
0° 0′	−∞		10.0000		−∞		∞	90° 0′
0° 10′	7.4637	301.1	.0000	.0	7.4637	301.1	2.5363	89° 50′
0° 20′	.7648	176.0	.0000	.0	.7648	176.1	.2352	89° 40′
0° 30′	.9408	125.0	.0000	.0	.9409	124.9	.0591	89° 30′
0° 40′	8.0658	96.9	.0000	.0	8.0658	96.9	1.9342	89° 20′
0° 50′	.1627	79.2	.0000	.1	.1627	79.2	.8373	89° 10′
1° 0′	8.2419	66.9	9.9999	.0	8.2419	67.0	1.7581	89° 0′
1° 10′	.3088	58.0	.9999	.0	.3089	58.0	.6911	88° 50′
1° 20′	.3668	51.1	.9999	.0	.3669	51.2	.6331	88° 40′
1° 30′	.4179	45.8	.9999	.1	.4181	45.7	.5819	88° 30′
1° 40′	.4637	41.3	.9998	.0	.4638	41.5	.5362	88° 20′
1° 50′	.5050	37.8	.9998	.1	.5053	37.8	.4947	88° 10′
2° 0′	8.5428	34.8	9.9997	.0	8.5431	34.8	1.4569	88° 0′
2° 10′	.5776	32.1	.9997	.1	.5779	32.2	.4221	87° 50′
2° 20′	.6097	30.0	.9996	.0	.6101	30.0	.3899	87° 40′
2° 30′	.6397	28.0	.9996	.1	.6401	28.1	.3599	87° 30′
2° 40′	.6677	26.3	.9995	.0	.6682	26.3	.3318	87° 20′
2° 50′	.6940	24.8	.9995	.1	.6945	24.9	.3055	87° 10′
3° 0′	8.7188	23.5	9.9994	.1	8.7194	23.5	1.2806	87° 0′
3° 10′	.7423	22.2	.9993	.0	.7429	22.3	.2571	86° 50′
3° 20′	.7645	21.2	.9993	.1	.7652	21.3	.2348	86° 40′
3° 30′	.7857	20.2	.9992	.1	.7865	20.2	.2135	86° 30′
3° 40′	.8059	19.2	.9991	.1	.8067	19.4	.1933	86° 20′
3° 50′	.8251	18.5	.9990	.1	.8261	18.5	.1739	86° 10′
4° 0′	8.8436	17.7	9.9989	.0	8.8446	17.8	1.1554	86° 0′
4° 10′	.8613	17.0	.9989	.1	.8624	17.1	.1376	85° 50′
4° 20′	.8783	16.3	.9988	.1	.8795	16.5	.1205	85° 40′
4° 30′	.8946	15.8	.9987	.1	.8960	15.8	.1040	85° 30′
4° 40′	.9104	15.2	.9986	.1	.9118	15.4	.0882	85° 20′
4° 50′	.9256	14.7	.9985	.2	.9272	14.8	.0728	85° 10′
5° 0′	8.9403	14.2	9.9983	.1	8.9420	14.3	1.0580	85° 0′
5° 10′	.9545	13.7	.9982	.1	.9563	13.8	0.0437	84° 50′
5° 20′	.9682	13.4	.9981	.1	.9701	13.5	.0299	84° 40′
5° 30′	.9816	12.9	.9980	.1	.9836	13.0	.0164	84° 30′
5° 40′	.9945	12.5	.9979	.2	.9966	12.7	.0034	84° 20′
5° 50′	9.0070	12.2	.9977	.1	9.0093	12.3	0.9907	84° 10′
6° 0′	9.0192	11.9	9.9976	.1	9.0216	12.0	0.9784	84° 0′
6° 10′	.0311	11.5	.9975	.2	.0336	11.7	.9664	83° 50′
6° 20′	.0426	11.3	.9973	.1	.0453	11.4	.9547	83° 40′
6° 30′	.0539	10.9	.9972	.1	.0567	11.1	.9433	83° 30′
6° 40′	.0648	10.7	.9971	.2	.0678	10.8	.9322	83° 20′
6° 50′	.0755	10.4	.9969	.1	.0786	10.5	.9214	83° 10′
7° 0′	9.0859	10.2	9.9968	.2	9.0891	10.4	0.9109	83° 0′
7° 10′	.0961	9.9	.9966	.2	.0995	10.1	.9005	82° 50′
7° 20′	.1060	9.7	.9964	.1	.1096	9.8	.8904	82° 40′
7° 30′	.1157		.9963		.1194		.8806	82° 30′
	Cos.	D. 1′.	Sin.	D. 1′.	Cot.	D. 1′.	Tan.	Angle.

LOGARITHMIC FUNCTIONS OF ANGLES—*Continued.*

Angle.	Sin.	D. 1′.	Cos.	D. 1′.	Tan.	D. 1′.	Cot.	
7° 30′	9.1157	9.5	9.9963	.2	9.1194	9.7	0.8806	82° 30′
7° 40′	.1252	9.3	.9961	.2	.1291	9.4	.8709	82° 20′
7° 50′	.1345	9.1	.9959	.1	.1385	9.3	.8615	82° 10′
8° 0′	9.1436	8.9	9.9958	.2	9.1478	9.1	0.8522	**82° 0′**
8° 10′	.1525	8.7	.9956	.2	.1569	8.9	.8431	81° 50′
8° 20′	.1612	8.5	.9954	.2	.1658	8.7	.8342	81° 40′
8° 30′	.1697	8.4	.9952	.2	.1745	8.6	.8255	81° 30′
8° 40′	.1781	8.2	.9950	.2	.1831	8.4	.8169	81° 20′
8° 50′	.1863	8.0	.9948	.2	.1915	8.2	.8085	81° 10′
9° 0′	9.1943	7.9	9.9946	.2	9.1997	8.1	0.8003	**81° 0′**
9° 10′	.2022	7.8	.9944	.2	.2078	8.0	.7922	80° 50′
9° 20′	.2100	7.6	.9942	.2	.2158	7.8	.7842	80° 40′
9° 30′	.2176	7.5	.9940	.2	.2236	7.7	.7764	80° 30′
9° 40′	.2251	7.3	.9938	.2	.2313	7.6	.7687	80° 20′
9° 50′	.2324	7.3	.9936	.2	.2389	7.4	.7611	80° 10′
10° 0′	9.2397	7.1	9.9934	.3	9.2463	7.3	0.7537	**80° 0′**
10° 10′	.2468	7.0	.9931	.2	.2536	7.3	.7464	79° 50′
10° 20′	.2538	6.8	.9929	.2	.2609	7.1	.7391	79° 40′
10° 30′	.2606	6.8	.9927	.3	.2680	7.0	.7320	79° 30′
10° 40′	.2674	6.6	.9924	.2	.2750	6.9	.7250	79° 20′
10° 50′	.2740	6.6	.9922	.3	.2819	6.8	.7181	79° 10′
11° 0′	9.2806	6.4	9.9919	.2	9.2887	6.6	0.7113	**79° 0′**
11° 10′	.2870	6.4	.9917	.3	.2953	6.7	.7047	78° 50′
11° 20′	.2934	6.3	.9914	.2	.3020	6.5	.6980	78° 40′
11° 30′	.2997	6.1	.9912	.3	.3085	6.4	.6915	78° 30′
11° 40′	.3058	6.1	.9909	.2	.3149	6.3	.6851	78° 20′
11° 50′	.3119	6.0	.9907	.3	.3212	6.3	.6788	78° 10′
12° 0′	9.3179	5.9	9.9904	.3	9.3275	6.1	0.6725	**78° 0′**
12° 10′	.3238	5.8	.9901	.2	.3336	6.1	.6664	77° 50′
12° 20′	.3296	5.7	.9899	.3	.3397	6.1	.6603	77° 40′
12° 30′	.3353	5.7	.9896	.3	.3458	5.9	.6542	77° 30′
12° 40′	.3410	5.6	.9893	.3	.3517	5.9	.6483	77° 20′
12° 50′	.3466	5.5	.9890	.3	.3576	5.8	.6424	77° 10′
13° 0′	9.3521	5.4	9.9887	.3	9.3634	5.7	0.6366	**77° 0′**
13° 10′	.3575	5.4	.9884	.3	.3691	5.7	.6309	76° 50′
13° 20′	.3629	5.3	.9881	.3	.3748	5.6	.6252	76° 40′
13° 30′	.3682	5.2	.9878	.3	.3804	5.5	.6196	76° 30′
13° 40′	.3734	5.2	.9875	.3	.3859	5.5	.6141	76° 20′
13° 50′	.3786	5.1	.9872	.3	.3914	5.4	.6086	76° 10′
14° 0′	9.3837	5.0	9.9869	.3	9.3968	5.3	0.6032	**76° 0′**
14° 10′	.3887	5.0	.9866	.3	.4021	5.3	.5979	75° 50′
14° 20′	.3937	4.9	.9863	.4	.4074	5.3	.5926	75° 40′
14° 30′	.3986	4.9	.9859	.3	.4127	5.1	.5873	75° 30′
14° 40′	.4035	4.8	.9856	.3	.4178	5.2	.5822	75° 20′
14° 50′	.4083	4.7	.9853	.4	.4230	5.1	.5770	75° 10′
15° 0′	9.4130		9.9849		9.4281		0.5719	**75° 0′**
	Cos.	D. 1′.	Sin.	D. 1′.	Cot.	D. 1′.	Tan.	Angle.

Digitized by Google

LOGARITHMIC FUNCTIONS OF ANGLES—*Continued.*

Angle.	Sin.	D. 1′.	Cos.	D. 1′.	Tan.	D. 1′.	Cot.	
15° 0′	9.4130	4.7	9.9849	.3	9.4281	5.0	0.5719	**75° 0′**
15° 10′	.4177	4.6	.9840	.3	.4331	5.0	.5669	74° 50′
15° 20′	.4223	4.6	.9843	.4	.4381	4.9	.5619	74° 40′
15° 30′	.4269	4.5	.9839	.3	.4430	4.9	.5570	74° 30′
15° 40′	.4314	4.5	.9836	.4	.4479	4.8	.5521	74° 20′
15° 50′	.4359	4.4	.9832	.4	.4527	4.8	.5473	74° 10′
16° 0′	9.4403	4.4	9.9828	.3	9.4575	4.7	0.5425	**74° 0′**
16° 10′	.4447	4.4	.9825	.4	.4622	4.7	.5378	73° 50′
16° 20′	.4491	4.2	.9821	.4	.4669	4.7	.5331	73° 40′
16° 30′	.4533	4.3	.9817	.3	.4716	4.6	.5284	73° 30′
16° 40′	.4576	4.2	.9814	.4	.4762	4.6	.5238	73° 20′
16° 50′	.4618	4.1	.9810	.4	.4808	4.5	.5192	73° 10′
17° 0′	9.4659	4.1	9.9806	.4	9.4853	4.5	0.5147	**73° 0′**
17° 10′	.4700	4.1	.9802	.4	.4898	4.5	.5102	72° 50′
17° 20′	.4741	4.0	.9798	.4	.4943	4.4	.5057	72° 40′
17° 30′	.4781	4.0	.9794	.4	.4987	4.4	.5013	72° 30′
17° 40′	.4821	4.0	.9790	.4	.5031	4.4	.4969	72° 20′
17° 50′	.4861	3.9	.9786	.4	.5075	4.3	.4925	72° 10′
18° 0′	9.4900	3.9	9.9782	.4	9.5118	4.3	0.4882	**72° 0′**
18° 10′	.4939	3.8	.9778	.4	.5161	4.2	.4839	71° 50′
18° 20′	.4977	3.8	.9774	.4	.5203	4.2	.4797	71° 40′
18° 30′	.5015	3.7	.9770	.5	.5245	4.2	.4755	71° 30′
18° 40′	.5052	3.8	.9765	.4	.5287	4.2	.4713	71° 20′
18° 50′	.5090	3.6	.9761	.4	.5329	4.1	.4671	71° 10′
19° 0′	9.5126	3.7	9.9757	.5	9.5370	4.1	0.4630	**71° 0′**
19° 10′	.5163	3.6	.9752	.4	.5411	4.0	.4589	70° 50′
19° 20′	.5199	3.6	.9748	.5	.5451	4.0	.4549	70° 40′
19° 30′	.5235	3.5	.9743	.4	.5491	4.0	.4509	70° 30′
19° 40′	.5270	3.6	.9739	.5	.5531	4.0	.4469	70° 20′
19° 50′	.5306	3.5	.9734	.4	.5571	4.0	.4429	70° 10′
20° 0′	9.5341	3.4	9.9730	.5	9.5611	3.9	0.4389	**70° 0′**
20° 10′	.5375	3.4	.9725	.4	.5650	3.9	.4350	69° 50′
20° 20′	.5409	3.4	.9721	.5	.5689	3.8	.4311	69° 40′
20° 30′	.5443	3.4	.9716	.5	.5727	3.9	.4273	69° 30′
20° 40′	.5477	3.3	.9711	.5	.5766	3.8	.4234	69° 20′
20° 50′	.5510	3.3	.9706	.5	.5804	3.8	.4196	69° 10′
21° 0′	9.5543	3.3	9.9702	.4	9.5842	3.7	0.4158	**69° 0′**
21° 10′	.5576	3.3	.9697	.5	.5879	3.8	.4121	68° 50′
21° 20′	.5609	3.2	.9692	.5	.5917	3.7	.4083	68° 40′
21° 30′	.5641	3.2	.9687	.5	.5954	3.7	.4046	68° 30′
21° 40′	.5673	3.1	.9682	.5	.5991	3.7	.4009	68° 20′
21° 50′	.5704	3.2	.9677	.5	.6028	3.6	.3972	68° 10′
22° 0′	9.5736	3.1	9.9672	.5	9.6064	3.6	0.3936	**68° 0′**
22° 10′	.5767	3.1	.9667	.6	.6100	3.6	.3900	67° 50′
22° 20′	.5798	3.0	.9661	.5	.6136	3.6	.3864	67° 40′
22° 30′	.5828		.9656		.6172		.3828	67° 30′
	Cos.	**D. 1′.**	**Sin.**	**D. 1′.**	**Cot.**	**D. 1′.**	**Tan.**	**Angle.**

LOGARITHMIC FUNCTIONS OF ANGLES—*Continued.*

Angle.	Sin.	D. 1′.	Cos.	D. 1′.	Tan.	D. 1′.	Cot.	
22° 30′	9.5828	3.1	9.9656	.5	9.6172	3.6	0.3828	67° 30′
22° 40′	.5859	3.0	.9651	.5	.6208	3.5	.3792	67° 20′
22° 50′	.5889	3.0	.9646	.6	.6243	3.6	.3757	67° 10′
23° 0′	9.5919	2.9	9.9640	.5	9.6279	3.5	0.3721	**67° 0′**
23° 10′	.5948	3.0	.9635	.6	.6314	3.4	.3686	66° 50′
23° 20′	.5978	2.9	.9629	.5	.6348	3.5	.3652	66° 40′
23° 30′	.6007	2.9	.9624	.6	.6383	3.4	.3617	66° 30′
23° 40′	.6036	2.9	.9618	.5	.6417	3.5	.3583	66° 20′
23° 50′	.6065	2.8	.9613	.6	.6452	3.4	.3548	66° 10′
24° 0′	9.6093	2.8	9.9607	.5	9.6486	3.4	0.3514	**66° 0′**
24° 10′	.6121	2.8	.9602	.6	.6520	3.3	.3480	65° 50′
24° 20′	.6149	2.8	.9596	.6	.6553	3.4	.3447	65° 40′
24° 30′	.6177	2.8	.9590	.6	.6587	3.3	.3413	65° 30′
24° 40′	.6205	2.7	.9584	.5	.6620	3.4	.3380	65° 20′
24° 50′	.6232	2.7	.9579	.6	.6654	3.3	.3346	65° 10′
25° 0′	9.6259	2.7	9.9573	.6	9.6687	3.3	0.3313	**65° 0′**
25° 10′	.6286	2.7	.9567	.6	.6720	3.2	.3280	64° 50′
25° 20′	.6313	2.7	.9561	.6	.6752	3.3	.3248	64° 40′
25° 30′	.6340	2.6	.9555	.6	.6785	3.2	.3215	64° 30′
25° 40′	.6366	2.6	.9549	.6	.6817	3.3	.3183	64° 20′
25° 50′	.6392	2.6	.9543	.6	.6850	3.2	.3150	64° 10′
26° 0′	9.6418	2.6	9.9537	.7	9.6882	3.2	0.3118	**64° 0′**
26° 10′	.6444	2.6	.9530	.6	.6914	3.2	.3086	63° 50′
26° 20′	.6470	2.5	.9524	.6	.6946	3.1	.3054	63° 40′
26° 30′	.6495	2.6	.9518	.6	.6977	3.2	.3023	63° 30′
26° 40′	.6521	2.5	.9512	.7	.7009	3.1	.2991	63° 20′
26° 50′	.6546	2.4	.9505	.6	.7040	3.2	.2960	63° 10′
27° 0′	9.6570	2.5	9.9499	.7	9.7072	3.1	0.2928	**63° 0′**
27° 10′	.6595	2.5	.9492	.6	.7103	3.1	.2897	62° 50′
27° 20′	.6620	2.4	.9486	.7	.7134	3.1	.2866	62° 40′
27° 30′	.6644	2.4	.9479	.6	.7165	3.1	.2835	62° 30′
27° 40′	.6668	2.4	.9473	.7	.7196	3.0	.2804	62° 20′
27° 50′	.6692	2.4	.9466	.7	.7226	3.1	.2774	62° 10′
28° 0′	9.6716	2.4	9.9459	.6	9.7257	3.0	0.2743	**62° 0′**
28° 10′	.6740	2.3	.9453	.7	.7287	3.0	.2713	61° 50′
28° 20′	.6763	2.4	.9446	.7	.7317	3.1	.2683	61° 40′
28° 30′	.6787	2.3	.9439	.7	.7348	3.0	.2652	61° 30′
28° 40′	.6810	2.3	.9432	.7	.7378	3.0	.2622	61° 20′
28° 50′	.6833	2.3	.9425	.7	.7408	3.0	.2592	61° 10′
29° 0′	9.6856	2.2	9.9418	.7	9.7438	2.9	0.2562	**61 °0′**
29° 10′	.6878	2.3	.9411	.7	.7467	3.0	.2533	60° 50′
29° 20′	.6901	2.2	.9404	.7	.7497	2.9	.2503	60° 40′
29° 30′	.6923	2.3	.9397	.7	.7526	3.0	.2474	60° 30′
29° 40′	.6946	2.2	.9390	.7	.7556	2.9	.2444	60° 20′
29° 50′	.6968	2.2	.9383	.8	.7585	2.9	.2415	60° 10′
30° 0′	9.6990		9.9375		9.7614		0.2386	**60° 0′**
	Cos.	D. 1′.	Sin.	D. 1′.	Cot.	D. 1.	Tan.	Angle.

LOGARITHMIC FUNCTIONS OF ANGLES—*Continued.*

Angle.	Sin.	D. 1′.	Cos.	D. 1′.	Tan.	D. 1′.	Cot.	
30° 0′	9.6990	2.2	9.9375	.7	9.7614	3.0	0.2386	**60° 0′**
30° 10′	.7012	2.1	.9368	.7	.7644	2.9	.2356	59° 50′
30° 20′	.7033	2.2	.9361	.8	.7673	2.8	.2327	59° 40′
30° 30′	.7055	2.1	.9353	.7	.7701	2.9	.2299	59° 30′
30° 40′	7076	2.1	.9346	.8	.7730	2.9	.2270	59° 20′
30° 50′	.7097	2.1	.9338	.7	.7759	2.9	.2241	59° 10′
31° 0′	9.7118	2.1	9.9331	.8	9.7788	2.8	0.2212	**59° 0′**
31° 10′	7139	2.1	.9323	.8	.7816	2.9	.2184	58° 50′
31° 20′	.7160	2.1	.9315	.7	.7845	2.8	.2155	58° 40′
31° 30′	.7181	2.0	.9308	.8	.7873	2.9	.2127	58° 30′
31° 40′	.7201	2.1	.9300	.8	.7902	2.8	.2098	58° 20′
31° 50′	.7222	2.0	.9292	.8	.7930	2.8	.2070	58° 10′
32° 0′	9.7242	2.0	9.9284	.8	9.7958	2.8	0.2042	**58° 0′**
32° 10′	.7262	2.0	.9276	.8	.7986	2.8	.2014	57° 50′
32° 20′	.7282	2.0	.9268	.8	.8014	2.8	.1986	57° 40′
32° 30′	.7302	2.0	.9260	.8	.8042	2.8	.1958	57° 30′
32° 40′	.7322	2.0	.9252	.8	.8070	2.7	.1930	57° 20′
32° 50′	.7342	1.9	.9244	.8	.8097	2.8	.1903	57° 10′
33° 0′	9.7361	1.9	9.9236	.8	9.8125	2.8	0.1875	**57° 0′**
33° 10′	.7380	2.0	.9228	.9	.8153	2.7	.1847	56° 50′
33° 20′	.7400	1.9	.9219	.8	.8180	2.8	.1820	56° 40′
33° 30′	.7419	1.9	.9211	.8	.8208	2.7	.1792	56° 30′
33° 40′	.7438	1.9	.9203	.9	.8235	2.8	.1765	56° 20′
33° 50′	.7457	1.9	.9194	.8	.8263	2.7	.1737	56° 10′
34° 0′	9.7476	1.8	9.9186	.9	9.8290	2.7	0.1710	**56° 0′**
34° 10′	.7494	1.9	.9177	.8	.8317	2.7	.1683	55° 50′
34° 20′	.7513	1.8	.9169	.9	.8344	2.7	.1656	55° 40′
34° 30′	.7531	1.9	.9160	.9	.8371	2.7	.1629	55° 30′
34° 40′	.7550	1.8	.9151	.9	.8398	2.7	.1602	55° 20′
34° 50′	.7568	1.8	.9142	.8	.8425	2.7	.1575	55° 10′
35° 0′	9.7586	1.8	9.9134	.9	9.8452	2.7	0.1548	**55° 0′**
35° 10′	.7604	1.8	.9125	.9	.8479	2.7	.1521	54° 50′
35° 20′	.7622	1.8	.9116	.9	.8506	2.7	.1494	54° 40′
35° 30′	.7640	1.7	.9107	.9	.8533	2.6	.1467	54° 30′
35° 40′	.7657	1.8	.9098	.9	.8559	2.7	.1441	54° 20′
35° 50′	.7675	1.7	.9089	.9	.8586	2.7	.1414	54° 10′
36° 0′	9.7692	1.8	9.9080	1.0	9.8613	2.6	0.1387	**54° 0′**
36° 10′	.7710	1.7	.9070	.9	.8639	2.7	.1361	53° 50′
36° 20′	.7727	1.7	.9061	.9	.8666	2.6	.1334	53° 40′
36° 30′	.7744	1.7	.9052	1.0	.8692	2.6	.1308	53° 30′
36° 40′	.7761	1.7	.9042	.9	.8718	2.7	.1282	53° 20′
36° 50′	.7778	1.7	.9033	1.0	.8745	2.6	.1255	53° 10′
37° 0′	9.7795	1.6	9.9023	.9	9.8771	2.6	0.1229	**53° 0′**
37° 10′	.7811	1.7	.9014	1.0	.8797	2.7	.1203	52° 50′
37° 20′	.7828	1.6	.9004	.9	.8824	2.6	.1176	52° 40′
37° 30′	.7844		.8995		.8850		.1150	52° 30′
	Cos.	**D. 1′.**	**Sin.**	**D. 1′.**	**Cot.**	**D. 1′.**	**Tan.**	**Angle.**

LOGARITHMIC FUNCTIONS OF ANGLES—*Continued.*

Angle.	Sin.	D. 1′.	Cos.	D. 1′.	Tan.	D. 1′.	Cot.	
37° 30′	9.7844	1.7	9.8995	1.0	9.8850	2.6	0.1150	52° 30′
37° 40′	.7861	1.6	.8985	1.0	.8876	2.6	.1124	52° 20′
37° 50′	.7877	1.6	.8975	1.0	.8902	2.6	.1098	52° 10′
38° 0′	9.7893	1.7	9.8965	1.0	9.8928	2.6	0.1072	**52° 0′**
38° 10′	.7910	1.6	.8955	1.0	.8954	2.6	.1046	51° 50′
38° 20′	.7926	1.5	.8945	1.0	.8980	2.6	.1020	51° 40′
38° 30′	.7941	1.6	.8935	1.0	.9006	2.6	.0994	51° 30′
38° 40′	.7957	1.6	.8925	1.0	.9032	2.6	.0968	51° 20′
38° 50′	.7973	1.6	.8915	1.0	.9058	2.6	.0942	51° 10′
39° 0′	9.7989	1.5	9.8905	1.0	9.9084	2.6	0.0916	**51° 0′**
39° 10′	.8004	1.6	.8895	1.1	.9110	2.5	.0890	50° 50′
39° 20′	.8020	1.5	.8884	1.0	.9135	2.6	.0865	50° 40′
39° 30′	.8035	1.5	.8874	1.0	.9161	2.6	.0839	50° 30′
39° 40′	.8050	1.6	.8864	1.1	.9187	2.5	.0813	50° 20′
39° 50′	.8066	1.5	.8853	1.0	.9212	2.6	.0788	50° 10′
40° 0′	9.8081	1.5	9.8843	1.1	9.9238	2.6	0.0762	**50° 0′**
40° 10′	.8096	1.5	.8832	1.1	.9264	2.5	.0736	49° 50′
40° 20′	.8111	1.4	.8821	1.1	.9289	2.6	.0711	49° 40′
40° 30′	.8125	1.5	.8810	1.0	.9315	2.6	.0685	49° 30′
40° 40′	.8140	1.5	.8800	1.1	.9341	2.5	.0659	49° 20′
40° 50′	.8155	1.4	.8789	1.1	.9366	2.6	.0634	49° 10′
41° 0′	9.8169	1.5	9.8778	1.1	9.9392	2.5	0.0608	**49° 0′**
41° 10′	.8184	1.4	.8767	1.1	.9417	2.6	.0583	48° 50′
41° 20′	.8198	1.5	.8756	1.1	.9443	2.5	.0557	48° 40′
41° 30′	.8213	1.4	.8745	1.2	.9468	2.6	.0532	48° 30′
41° 40′	.8227	1.4	.8733	1.1	.9494	2.5	.0506	48° 20′
41° 50′	.8241	1.4	.8722	1.1	.9519	2.5	.0481	48° 10′
42° 0′	9.8255	1.4	9.8711	1.2	9.9544	2.6	0.0456	**48° 0′**
42° 10′	.8269	1.4	.8699	1.1	.9570	2.5	.0430	47° 50′
42° 20′	.8283	1.4	.8688	1.2	.9595	2.6	.0405	47° 40′
42° 30′	.8297	1.4	.8676	1.1	.9621	2.5	.0379	47° 30′
42° 40′	.8311	1.3	.8665	1.2	.9646	2.5	.0354	47° 20′
42° 50′	.8324	1.4	.8653	1.2	.9671	2.6	.0329	47° 10′
43° 0′	9.8338	1.3	9.8641	1.2	9.9697	2.5	0.0303	**47° 0′**
43° 10′	.8351	1.4	.8629	1.1	.9722	2.5	.0278	46° 50′
43° 20′	.8365	1.3	.8618	1.2	.9747	2.5	.0253	46° 40′
43° 30′	.8378	1.3	.8606	1.2	.9772	2.6	.0228	46° 30′
43° 40′	.8391	1.4	.8594	1.2	.9798	2.5	.0202	46° 20′
43° 50′	.8405	1.3	.8582	1.2	.9823	2.5	.0177	46° 10′
44° 0′	9.8418	1.3	9.8569	1.2	9.9848	2.6	0.0152	**46° 0′**
44° 10′	.8431	1.3	.8557	1.2	.9874	2.5	.0126	45° 50′
44° 20′	.8444	1.3	.8545	1.3	.9899	2.5	.0101	45° 40′
44° 30′	.8457	1.2	.8532	1.2	.9924	2.5	.0076	45° 30′
44° 40′	.8469	1.3	.8520	1.3	.9949	2.6	.0051	45° 20′
44° 50′	.8482	1.3	.8507	1.2	.9975	2.5	.0025	45° 10′
45° 0′	9.8495		9.8495		0.0000		0.0000	**45° 0′**
	Cos.	**D. 1′.**	**Sin.**	**D. 1′.**	**Cot.**	**D. 1′.**	**Tan.**	**Angle.**

Digitized by Google

V.

NATURAL FUNCTIONS OF ANGLES.

A.	Sin.	Cos.		A.	Sin.	Cos.		A.	Sin.	Cos.	
0°	.000000	1.0000	90°	30′	.1305	.9914	30′	15°	.2588	.9659	75°
10′	.002909	1.0000	50′	40′	.1334	.9911	20′	10′	.2616	.9652	50′
20′	.005818	1.0000	40′	50′	.1363	.9907	10′	20′	.2644	.9644	40′
30′	.008727	1.0000	30′	8°	.1392	.9903	82°	30′	.2672	.9636	30′
40′	.011635	.9999	20′	10′	.1421	.9899	50′	40′	.2700	.9628	20′
50′	.014544	.9999	10′	20′	.1449	.9894	40′	50′	.2728	.9621	10′
1°	.017452	.9998	89°	30′	.1478	.9890	30′	16°	.2756	.9613	74°
10′	.02036	.9998	50′	40′	.1507	.9886	20′	10′	.2784	.9605	50′
20′	.02327	.9997	40′	50′	.1536	.9881	10′	20′	.2812	.9596	40′
30′	.02618	.9997	30′	9°	.1564	.9877	81°	30′	.2840	.9588	30′
40′	.02908	.9996	20′	10′	.1593	.9872	50′	40′	.2868	.9580	20′
50′	.03199	.9995	10′	20′	.1622	.9868	40′	50′	.2896	.9572	10′
2°	.03490	.9994	88°	30′	.1650	.9863	30′	17°	.2924	.9563	73°
10′	.03781	.9993	50′	40′	.1679	.9858	20′	10′	.2952	.9555	50′
20′	.04071	.9992	40′	50′	.1708	.9853	10′	20′	.2979	.9546	40′
30′	.04362	.9990	30′	10°	.1736	.9848	80°	30′	.3007	.9537	30′
40′	.04653	.9989	20′	10′	.1765	.9843	50′	40′	.3035	.9528	20′
50′	.04943	.9988	10′	20′	.1794	.9838	40′	50′	.3062	.9520	10′
3°	.05234	.9986	87°	30′	.1822	.9833	30′	18°	.3090	.9511	72°
10′	.05524	.9985	50′	40′	.1851	.9827	20′	10′	.3118	.9502	50′
20′	.05814	.9983	40′	50′	.1880	.9822	10′	20′	.3145	.9492	40′
30′	.06105	.9981	30′	11°	.1908	.9816	79°	30′	.3173	.9483	30′
40′	.06395	.9980	20′	10′	.1937	.9811	50′	40′	.3201	.9474	20′
50′	.06685	.9978	10′	20′	.1965	.9805	40′	50′	.3228	.9465	10′
4°	.06976	.9976	86°	30′	.1994	.9799	30′	19°	.3256	.9455	71°
10′	.07266	.9974	50′	40′	.2022	.9793	20′	10′	.3283	.9446	50′
20′	.07556	.9971	40′	50′	.2051	.9787	10′	20′	.3311	.9436	40′
30′	.07846	.9969	30′	12°	.2079	.9781	78°	30′	.3338	.9426	30′
40′	.08136	.9967	20′	10′	.2108	.9775	50′	40′	.3365	.9417	20′
50′	.08426	.9964	10′	20′	.2136	.9769	40′	50′	.3393	.9407	10′
5°	.08716	.9962	85°	30′	.2164	.9763	30′	20°	.3420	.9397	70°
10′	.09005	.9959	50′	40′	.2193	.9757	20′	10′	.3448	.9387	50′
20′	.09295	.9957	40′	50′	.2221	.9750	10′	20′	.3475	.9377	40′
30′	.09585	.9954	30′	13°	.2250	.9744	77°	30′	.3502	.9367	30′
40′	.09874	.9951	20′	10′	.2278	.9737	50′	40′	.3529	.9356	20′
50′	.10164	.9948	10′	20′	.2306	.9730	40′	50′	.3557	.9346	10′
6°	.10453	.9945	84°	30′	.2334	.9724	30′	21°	.3584	.9336	69°
10′	.10742	.9942	50′	40′	.2363	.9717	20′	10′	.3611	.9325	50′
20′	.11031	.9939	40′	50′	.2391	.9710	10′	20′	.3638	.9315	40′
30′	.11320	.9936	30′	14°	.2419	.9703	76°	30′	.3665	.9304	30′
40′	.11609	.9932	20′	10′	.2447	.9696	50′	40′	.3692	.9293	20′
50′	.11898	.9929	10′	20′	.2476	.9689	40′	50′	.3719	.9283	10′
7°	.12187	.9925	83°	30′	.2504	.9681	30′	22°	.3746	.9272	68°
10′	.12476	.9922	50′	40′	.2532	.9674	20′	10′	.3773	.9261	50′
20′	.12764	.9918	40′	50′	.2560	.9667	10′	20′	.3800	.9250	40′
30′	.13053	.9914	30′	15°	.2588	.9659	75°	30′	.3827	.9239	30′
	Cos.	Sin.	A.		Cos.	Sin.	A.		Cos.	Sin.	A.

NATURAL FUNCTIONS OF ANGLES—*Continued.*

A.	Sin.	Cos.		A.	Sin.	Cos.		A.	Sin.	Cos.	
30′	.3827	.9239	30′	**30°**	.5000	.8660	**60°**	30′	.6088	.7934	30′
40′	.3854	.9228	20′	10′	.5025	.8646	50′	40′	.6111	.7916	20′
50′	.3881	.9216	10′	20′	.5050	.8631	40′	50′	.6134	.7898	10′
23°	.3907	.9205	**67°**	30′	.5075	.8616	30′	**38°**	.6157	.7880	**52°**
10′	.3934	.9194	50′	40′	.5100	.8601	20′	10′	.6180	.7862	50′
20′	.3961	.9182	40′	50′	.5125	.8587	10′	20′	.6202	.7844	40′
30′	.3987	.9171	30′	**31°**	.5150	.8572	**59°**	30′	.6225	.7826	30′
40′	.4014	.9159	20′	10′	.5175	.8557	50′	40′	.6248	.7808	20′
50′	.4041	.9147	10′	20′	.5200	.8542	40′	50′	.6271	.7790	10′
24°	.4067	.9135	**66°**	30′	.5225	.8526	30′	**39°**	.6293	.7771	**51°**
10′	.4094	.9124	50′	40′	.5250	.8511	20′	10′	.6316	.7753	50′
20′	.4120	.9112	40′	50′	.5275	.8496	10′	20′	.6338	.7735	40′
30′	.4147	.9100	30′	**32°**	.5299	.8480	**58°**	30′	.6361	.7716	30′
40′	.4173	.9088	20′	10′	.5324	.8465	50′	40′	.6383	.7698	20′
50′	.4200	.9075	10′	20′	.5348	.8450	40′	50′	.6406	.7679	10′
25°	.4226	.9063	**65°**	30′	.5373	.8434	30′	**40°**	.6428	.7660	**50°**
10′	.4253	.9051	50′	40′	.5398	.8418	20′	10′	.6450	.7642	50′
20′	.4279	.9038	40′	50′	.5422	.8403	10′	20′	.6472	.7623	40′
30′	.4305	.9026	30′	**33°**	.5446	.8387	**57°**	30′	.6494	.7604	30′
40′	.4331	.9013	20′	10′	.5471	.8371	50′	40′	.6517	.7585	20′
50′	.4358	.9001	10′	20′	.5495	.8355	40′	50′	.6539	.7566	10′
26°	.4384	.8988	**64°**	30′	.5519	.8339	30′	**41°**	.6561	.7547	**49°**
10′	.4410	.8975	50′	40′	.5544	.8323	20′	10′	.6583	.7528	50′
20′	.4436	.8962	40′	50′	.5568	.8307	10′	20′	.6604	.7509	40′
30′	.4462	.8949	30′	**34°**	.5592	.8290	**56°**	30′	.6626	.7490	30′
40′	.4488	.8936	20′	10′	.5616	.8274	50′	40′	.6648	.7470	20′
50′	.4514	.8923	10′	20′	.5640	.8258	40′	50′	.6670	.7451	10′
27°	.4540	.8910	**63°**	30′	.5664	.8241	30′	**42°**	.6691	.7431	**48°**
10′	.4566	.8897	50′	40′	.5688	.8225	20′	10′	.6713	.7412	50′
20′	.4592	.8884	40′	50′	.5712	.8208	10′	20′	.6734	.7392	40′
30′	.4617	.8870	30′	**35°**	.5736	.8192	**55°**	30′	.6756	.7373	30′
40′	.4643	.8857	20′	10′	.5760	.8175	50′	40′	.6777	.7353	20′
50′	.4669	.8843	10′	20′	.5783	.8158	40′	50′	.6799	.7333	10′
28°	.4695	.8829	**62°**	30′	.5807	.8141	30′	**43°**	.6820	.7314	**47°**
10′	.4720	.8816	50′	40′	.5831	.8124	20′	10′	.6841	.7294	50′
20′	.4746	.8802	40′	50′	.5854	.8107	10′	20′	.6862	.7274	40′
30′	.4772	.8788	30′	**36°**	.5878	.8090	**54°**	30′	.6884	.7254	30′
40′	.4797	.8774	20′	10′	.5901	.8073	50′	40′	.6905	.7234	20′
50′	.4823	.8760	10′	20′	.5925	.8056	40′	50′	.6926	.7214	10′
29°	.4848	.8746	**61°**	30′	.5948	.8039	30′	**44°**	.6947	.7193	**46°**
10′	.4874	.8732	50′	40′	.5972	.8021	20′	10′	.6967	.7173	50′
20′	.4899	.8718	40′	50′	.5995	.8004	10′	20′	.6988	.7153	40′
30′	.4924	.8704	30′	**37°**	.6018	.7986	**53°**	30′	.7009	.7133	30′
40′	.4950	.8689	20′	10′	.6041	.7969	50′	40′	.7030	.7112	20′
50′	.4975	.8675	10′	20′	.6065	.7951	40′	50′	.7050	.7092	10′
30°	.5000	.8660	**60°**	30	.6088	.7934	30′	**45°**	.7071	.7071	**45°**
	Cos.	Sin.	A.		Cos.	Sin.	A.		Cos.	Sin.	A

NATURAL FUNCTIONS OF ANGLES—*Continued.*

A.	Tan.	Cot.		A.	Tan.	Cot.		A.	Tan.	Cot.	
0°	.000000	∞	90°	30′	.1317	7.5958	30′	15°	.2679	3.7321	75°
10′	.002909	343.7737	50′	40′	.1346	7.4287	20′	10′	.2711	3.6891	50′
20′	.005818	171.8854	40′	50′	.1376	7.2687	10′	20′	.2742	3.6470	40′
30′	.008727	114.5887	30′	8°	.1405	7.1154	82°	30′	.2773	3.6059	30′
40′	.011636	85.9398	20′	10′	.1435	6.9682	50′	40′	.2805	3.5656	20′
50′	.014545	68.7501	10′	20′	.1465	6.8269	40′	50′	.2836	3.5261	10′
1°	.017455	57.2900	89°	30′	.1495	6.6912	30′	16°	.2867	3.4874	74°
10′	.02036	49.1039	50′	40′	.1524	6.5606	20′	10′	.2899	3.4495	50′
20′	.02328	42.9641	40′	50′	.1554	6.4348	10′	20′	.2931	3.4124	40′
30′	.02619	38.1885	30′	9°	.1584	6.3138	81°	30′	.2962	3.3759	30′
40′	.02910	34.3678	20′	10′	.1614	6.1970	50′	40′	.2994	3.3402	20′
50′	.03201	31.2416	10′	20′	.1644	6.0844	40′	50′	.3026	3.3052	10′
2°	.03492	28.6363	88°	30′	.1673	5.9758	30′	17°	.3057	3.2709	73°
10′	.03783	26.4316	50′	40′	.1703	5.8708	20′	10′	.3089	3.2371	50′
20′	.04075	24.5418	40′	50′	.1733	5.7694	10′	20′	.3121	3.2041	40′
30′	.04366	22.9038	30′	10°	.1763	5.6713	80°	30′	.3153	3.1716	30′
40′	.04658	21.4704	20′	10′	.1793	5.5764	50′	40′	.3185	3.1397	20′
50′	.04949	20.2056	10′	20′	.1823	5.4845	40′	50′	.3217	3.1084	10′
3°	.05241	19.0811	87°	30′	.1853	5.3955	30′	18°	.3249	3.0777	72°
10′	.05533	18.0750	50′	40′	.1883	5.3093	20′	10′	.3281	3.0475	50′
20′	.05824	17.1693	40′	50′	.1914	5.2257	10′	20′	.3314	3.0178	40′
30′	.06116	16.3499	30′	11°	.1944	5.1446	79°	30′	.3346	2.9887	30′
40′	.06408	15.6048	20′	10′	.1974	5.0658	50′	40′	.3378	2.9600	20′
50′	.06700	14.9244	10′	20′	.2004	4.9894	40′	50′	.3411	2.9319	10′
4°	.06993	14.3007	86°	30′	.2035	4.9152	30′	19°	.3443	2.9042	71°
10′	.07285	13.7267	50′	40′	.2065	4.8430	20′	10′	.3476	2.8770	50′
20′	.07578	13.1969	40′	50′	.2095	4.7729	10′	20′	.3508	2.8502	40′
30′	.07870	12.7062	30′	12°	.2126	4.7046	78°	30′	.3541	2.8239	30′
40′	.08163	12.2505	20′	10′	.2156	4.6382	50′	40′	.3574	2.7980	20′
50′	.08456	11.8262	10′	20′	.2186	4.5736	40′	50′	.3607	2.7725	10′
5°	.08749	11.4301	85°	30′	.2217	4.5107	30′	20°	.3640	2.7475	70°
10′	.09042	11.0594	50′	40′	.2247	4.4494	20′	10′	.3673	2.7228	50′
20′	.09335	10.7119	40′	50′	.2278	4.3897	10′	20′	.3706	2.6985	40′
30′	.09629	10.3854	30′	13°	.2309	4.3315	77°	30′	.3739	2.6746	30′
40′	.09923	10.0780	20′	10′	.2339	4.2747	50′	40′	.3772	2.6511	20′
50′	.10216	9.7882	10′	20′	.2370	4.2193	40′	50′	.3805	2.6279	10′
6°	.10510	9.5144	84°	30′	.2401	4.1653	30′	21°	.3839	2.6051	69°
10′	.10805	9.2553	50′	40′	.2432	4.1126	20′	10′	.3872	2.5826	50′
20′	.11099	9.0098	40′	50′	.2462	4.0611	10′	20′	.3906	2.5605	40′
30′	.11394	8.7769	30′	14°	.2493	4.0108	76°	30′	.3939	2.5386	30′
40′	.11688	8.5555	20′	10′	.2524	3.9617	50′	40′	.3973	2.5172	20′
50′	.11983	8.3450	10′	20′	.2555	3.9136	40′	50′	.4006	2.4960	10′
7°	.12278	8.1443	83°	30′	.2586	3.8667	30′	22°	.4040	2.4751	68°
10′	.12574	7.9530	50′	40′	.2617	3.8208	20′	10′	.4074	2.4545	50′
20′	.12869	7.7704	40′	50′	.2648	3.7760	10′	20′	.4108	2.4342	40′
30′	.13165	7.5958	30′	15°	.2679	3.7321	75°	30′	.4142	2.4142	30′
	Cot.	Tan.	A.		Cot.	Tan.	A.		Cot.	Tan.	A.

Digitized by Google

NATURAL FUNCTIONS OF ANGLES—*Continued.*

A.	Tan.	Cot.		A.	Tan.	Cot.		A.	Tan.	Cot.	
30′	.4142	2.4142	30′	30°	.5774	1.7321	60°	30′	.7673	1.3032	30′
40′	.4176	2.3945	20′	10′	.5812	1.7205	50′	40′	.7720	1.2954	20′
50′	.4210	2.3750	10′	20′	.5851	1.7090	40′	50′	.7766	1.2876	10′
23°	.4245	2.3559	67°	30′	.5890	1.6977	30′	38°	.7813	1.2799	52°
10′	.4279	2.3369	50′	40′	.5930	1.6864	20′	10′	.7860	1.2723	50′
20′	.4314	2.3183	40′	50′	.5969	1.6753	10′	20′	.7907	1.2647	40′
30′	.4348	2.2998	30′	31°	.6009	1.6643	59°	30′	.7954	1.2572	30′
40′	.4383	2.2817	20′	10′	.6048	1.6534	50′	40′	.8002	1.2497	20′
50′	.4417	2.2637	10′	20′	.6088	1.6426	40′	50′	.8050	1.2423	10′
24°	.4452	2.2460	66°	30′	.6128	1.6319	30′	39°	.8098	1.2349	51°
10′	.4487	2.2286	50′	40′	.6168	1.6212	20′	10′	.8146	1.2276	50′
20′	.4522	2.2113	40′	50′	.6208	1.6107	10′	20′	.8195	1.2203	40′
30′	.4557	2.1943	30′	32°	.6249	1.6003	58°	30′	.8243	1.2131	30′
40′	.4592	2.1775	20′	10′	.6289	1.5900	50′	40′	.8292	1.2059	20′
50′	.4628	2.1609	10′	20′	.6330	1.5798	40′	50′	.8342	1.1988	10′
25°	.4663	2.1445	65°	30′	.6371	1.5697	30′	40°	.8391	1.1918	50°
10′	.4699	2.1283	50′	40′	.6412	1.5597	20′	10′	.8441	1.1847	50′
20′	.4734	2.1123	40′	50′	.6453	1.5497	10′	20′	.8491	1.1778	40′
30′	.4770	2.0965	30′	33°	.6494	1.5399	57°	30′	.8541	1.1708	30′
40′	.4806	2.0809	20′	10′	.6536	1.5301	50′	40′	.8591	1.1640	20′
50′	.4841	2.0655	10′	20′	.6577	1.5204	40′	50′	.8642	1.1571	10′
26°	.4877	2.0503	64°	30′	.6619	1.5108	30′	41°	.8693	1.1504	49°
10′	.4913	2.0353	50′	40′	.6661	1.5013	20′	10′	.8744	1.1436	50′
20′	.4950	2.0204	40′	50′	.6703	1.4919	10′	20′	.8796	1.1369	40′
30′	.4986	2.0057	30′	34°	.6745	1.4826	56°	30′	.8847	1.1303	30′
40′	.5022	1.9912	20′	10′	.6787	1.4733	50′	40′	.8899	1.1237	20′
50′	.5059	1.9768	10′	20′	.6830	1.4641	40′	50′	.8952	1.1171	10′
27°	.5095	1.9626	63°	30′	.6873	1.4550	30′	42°	.9004	1.1106	48°
10′	.5132	1.9486	50′	40′	.6916	1.4460	20′	10′	.9057	1.1041	50′
20′	.5169	1.9347	40′	50′	.6959	1.4370	10′	20′	.9110	1.0977	40′
30′	.5206	1.9210	30′	35°	.7002	1.4281	55°	30′	.9163	1.0913	30′
40′	.5243	1.9074	20′	10′	.7046	1.4193	50′	40′	.9217	1.0850	20′
50′	.5280	1.8940	10′	20′	.7089	1.4106	40′	50′	.9271	1.0786	10′
28°	.5317	1.8807	62°	30′	.7133	1.4019	30′	43°	.9325	1.0724	47°
10′	.5354	1.8676	50′	40′	.7177	1.3934	20′	10′	.9380	1.0661	50′
20′	.5392	1.8546	40′	50′	.7221	1.3848	10′	20′	.9435	1.0599	40′
30′	.5430	1.8418	30′	36°	.7265	1.3764	54°	30′	.9490	1.0538	30′
40′	.5467	1.8291	20′	10′	.7310	1.3680	50′	40′	.9545	1.0477	20′
50′	.5505	1.8165	10′	20′	.7355	1.3597	40′	50′	.9601	1.0416	10′
29°	.5543	1.8040	61°	30′	.7400	1.3514	30′	44°	.9657	1.0355	46°
10′	.5581	1.7917	50′	40′	.7445	1.3432	20′	10′	.9713	1.0295	50′
20′	.5619	1.7796	40′	50′	.7490	1.3351	10′	20′	.9770	1.0235	40′
30′	.5658	1.7675	30′	37°	.7536	1.3270	53°	30′	.9827	1.0176	30′
40′	.5696	1.7556	20′	10′	.7581	1.3190	50′	40′	.9884	1.0117	20′
50′	.5735	1.7437	10′	20′	.7627	1.3111	40′	50′	.9942	1.0058	10′
30°	.5774	1.7321	60°	30′	.7673	1.3032	30′	45°	1.0000	1.0000	45°
	Cot.	Tan.	A.		Cot.	Tan.	A.		Cot.	Tan.	A.

VI.

TABLE OF COEFFICIENTS, STRENGTH OF MATERIALS.

	Ultimate Strength. Tons per Square Inch.			Moduli. Tons per Sq. Inch.	
	Tension.	Compression.	Shearing.	Elasticity.	Rig.
	T	*C*	*S*	*E*	E_s
Cast-iron	5½–10½	25–65	9–13	5000 to 6000	1300 to 2500
Average	7	42	11		
American ordnance	14	36–58			
Repeatedly melted	15–20	60–75			
Wrought-iron—					
Finest Low-moor plates: with grain	27–29				
Finest Low-moor plates: across "	24				
Bridge-iron: with "	22			12,000 to 13,000	5000
Bridge-iron: across "	19		18–22		
Bars, finest	27–29				
Bars, ordinary	25	20			
Bars, soft Swedish	19–24				
Wire	25–50				
Steel—					
Mild-steel plates	26–32		½ of Tension.	12,000 to 13,000	5000 to 5200
Axle and rail steel	30–45				
Crucible tool- "	40–65				
Chrome "	80				
Tungsten "	72				
Steel wire	70				
Piano-wire	150			13,000	
Copper—					
Cast	10–14			7000	
Rolled	15–16	35	10–14		
Wire, hard drawn	28			8000	2800
Brass	8–13	5		5500	1500
Wire	22			6400	2200
Gun-metal	11–23			4500–6000	1700
Phosphor bronze	15–26			6000	2400
Zinc, cast	2–3				
Zinc, rolled	7–10			5500	
Tin	2				
Lead	0.9	3		1000	
Timber—					
Oak	3–7	4	1	800	
White pine	1½–3½	2½		600	
Pitch-pine	4			950	
Ash	4–7	2–4	½	750	
Beech	4–6	4			
Mahogany	4–7	3½		650	
Stone—					
Granite		2½–5			
Sandstone		1½–2½			
Limestone		1½–3			
Brick		½–6			

From Vol. XXII., Encyc. Britannica.

VII.

STRENGTH OF METALS AT DIFFERENT TEMPERATURES.

[EXPERIMENTS OF A. LE CHATELIER, PARIS, 1891.]

CAST-BRASS.

Strength remains about constant until 500° C.

Temperature Centigrade. Deg.	Breaking-load per Square Inch. Lbs.	Elongation. Per Cent.
15	19,457	0.24
155	17,864	0.71
230	17,508	0.35
480	17,693	0.89
540	11,677	0.54
690	5,660	0.71

TIN-BRONZE.

Temperature Centigrade. Deg.	Breaking-load per Square Inch. Lbs.	Elongation. Per Cent.	Duration of Test. M.	S.
15	22,614	5.7	8	30
140	23,582	7.08	5	30
230	20,524	3.9	6	30
250	18,717	4.28	21	0
300	17,124	2.0	17	0
350	15,574	1.4	16	0
415	9,031		2	30

ALUMINIUM-BRASS.

Temperature Centigrade. Deg.	Breaking-load per Square Inch. Lbs.	Elongation in 5.502 Inches. Per Cent.
15	49,183	30.7
140	46,168	37.0
230	42,100	33.2
320	30,380	15.6

VIII.

IMPORTANT PROPERTIES OF FAMILIAR SUBSTANCES.

	Specific Gravity. Water, 1.	Specific Heat. Water, 1.	Absorbing and Radiating Power of Bodies in Units of Heat per Square Foot for Difference of 1°.	Conducting Power in Units of Heat per Square Foot of Surface with Difference of 1°.	Weight in Pounds	Melting Points. Degrees Fahr.
Metals from 32° to 212°—					Per cu. in.	
Aluminium	2.61 to 2.65	.212	.....	.....	0.1100	
Antimony	6.712	.0508	.....	.....	0.2428	810
Bismuth	9.823	.0308	.....	.....	0.3533	476
Brass	8.1	.0939	.049	.....	0.2930	1692
Copper	8.788	.092	.0327	515.0	0.3179	1996
Iron, cast	7.5	.1298	.648	233.0	0.2707	2250
Iron, wrought	7.744	.1138	.566	233.0	0.2801	2900
Gold	19.258	.0324	.....	.....	0.6965	2590
Lead	11.352	.0314	.1329	113.0	0.4106	608
Mercury at 32°	13.598	.0333	.....	.....	0.4918	−39
Nickel	8.800	.1086	.....	.....	0.3183	2640
Platinum	16.000	.0324	.....	.....	0.5787	3700
Silver	10.474	.056	.0265	.....	0.3788	2000
Steel	7.834	.1165	.....	.....	0.2916	4000
Tin	7.291	.0562	.0439	.....	0.2637	446
Zinc	7.191	.0953	.049	225.0	0.26	680
Stones—					Per cu. ft.	
Chalk	2.784	.2149	.6786	.....	174.0	
Limestone	3.156	.2174	.735	.....	197.0	
Masonry	2.240	.2	.735	.....	140.0	
Marble, gray	2.686	.2694	.735	28.0	168.0	
Marble, white	2.630	.2158	.735	22.4	165.0	
Woods—						
Oak	.86	.57	.73	1.7	54.0	
Pine, white	.55	.65	.73	.748	34.6	
Mineral substances—						
Charcoal, pine	.44	.2415	.....	.....	27.5	
Coal, anthracite	1.43	.2411	.....	.....	88.7	
Coke	1.00	.203	.....	.....	62.5	
Glass, white	2.89	.1977	.5948	6.6	180.7	
Sulphur	2.03	.2026	.....	.....	127.0	
Liquids—						
Alcohol, mean	.0	.6588	.....	.....	57.5	
Oil, petroleum	.88	.31	1.480	.....	55.0	
Steam at 212°	.0006	.847	.....	.....	.050	
Turpentine	.87	.416	.....	.....	54.37	
Water at 62°	1.000	1.000	1.0853	.....	62.35	
Solid—						
Ice at 32°	.922	.504	.....	.....	57.5	
Gases—						
Air at 32°	.00122	.238	.....	.....	.0807	
Oxygen	.00127	.2412	.....	.....	.0892	
Hydrogen	.000084	3.2936	.....	.....	.00559	
Carbonic acid	.00198	.2210	.....	.....	.1234	

See also pages 338 and 383.

IX.—COEFFICIENTS OF FRICTION. (MORIN.) (Page 196.)

No.	Surfaces.	Angle of Repose. ϕ	Coefficient of Friction. $f = \tan \phi$	$1 + f$
		Deg.		
1	Wood on wood, dry	14 to 26½	0.25 to .5	4 to 2
2	" " " soaked	11½ to 2	.2 to .04	5 to 25
3	Metals on oak, dry	26½ to 31	.5 to .6	2 to 1 67
4	" " " wet	13½ to 14½	.24 to .26	4.17 to 3.85
5	" " " soapy	11½	.2	5
6	" " elm, dry	11½ to 14	.2 to .25	5 to 4
7	Hemp on oak, "	28	.53	1.89
8	" " " wet	18½	.33	3
9	Leather on oak	15 to 19½	.27 to .38	3.7 to 2.86
10	Leather on metals, dry	29½	.56	1.79
11	" " " wet	20	.36	2.78
12	" " " greasy	13	.23	4.35
13	" " " oily	8½	.15	6.67
14	Metals on metals, dry	8½ to 11½	.15 to .2	6.67 to 5
15	" " " wet	16½	.3	3.33
16	Smooth surfaces, occasionally greased	4 to 4½	.07 to .08	14.3 to 12.5
17	Smooth surfaces, continually greased	3	.05	20
18	Smooth surfaces, best results	1½ to 2	.03 to .036	33.3 to 27.0
19	Bronze on lignum vitæ, wet	3?	.05?	20?

NOTE.—The above table is defective since the pressure per square inch is not given. The coefficient of friction diminishes with increase of pressure, so that in some cases the total friction remains constant.

X.—HYPERBOLIC OR NAPERIAN LOGARITHMS.

N.	Log.	N.	Log.	N.	Log.	N.	Log.	N.	Log.
1.00	0.0000	2.30	0.8329	3.60	1.2809	4.90	1.5892	6.40	1.8563
1.05	0.0488	2.35	0.8544	3.65	1.2947	4.95	1.5994	6.50	1.8718
1.10	0.0953	2.40	0.8755	3.70	1.3083	5.00	1.6094	6.60	1.8871
1.15	0.1398	2.45	0.8961	3.75	1.3218	5.05	1.6194	6.70	1.9021
1.20	0.1823	2.50	0.9163	3.80	1.3350	5.10	1.6292	6.80	1.9169
1.25	0.2231	2.55	0.9361	3.85	1.3481	5.15	1.6390	6.90	1.9315
1.30	0.2624	2.60	0.9555	3.90	1.3610	5.20	1.6487	7.00	1.9459
1.35	0.3001	2.65	0.9746	3.95	1.3737	5.25	1.6582	7.20	1.9741
1.40	0.3365	2.70	0.9933	4.00	1.3863	5.30	1.6677	7.40	2.0015
1.45	0.3716	2.75	1.0116	4.05	1.3987	5.35	1.6771	7.60	2.0281
1.50	0.4055	2.80	1.0296	4.10	1.4110	5.40	1.6864	7.80	2.0541
1.55	0.4383	2.85	1.0473	4.15	1.4231	5.45	1.6956	8.00	2.0794
1.60	0.4700	2.90	1.0647	4.20	1.4351	5.50	1.7047	8.25	2.1102
1.65	0.5008	2.95	1.0818	4.25	1.4469	5.55	1.7138	8.50	2.1401
1.70	0.5306	3.00	1.0986	4.30	1.4586	5.60	1.7228	8.75	2.1691
1.75	0.5505	3.05	1.1154	4.35	1.4701	5.65	1.7317	9.00	2.1972
1.80	0.5878	3.10	1.1314	4.40	1.4816	5.70	1.7405	9.25	2.2246
1.85	0.6152	3.15	1.1474	4.45	1.4929	5.75	1.7492	9.50	2.2513
1.90	0.6419	3.20	1.1632	4.50	1.5041	5.80	1.7579	9.75	2.2773
1.95	0.6678	3.25	1.1787	4.55	1.5151	5.85	1.7664	10.00	2.3026
2.00	0.6931	3.30	1.1939	4.60	1.5261	5.90	1.7750	11.00	2.3979
2.05	0.7178	3.35	1.2090	4.65	1.5369	5.95	1.7834	12.00	2.4849
2.10	0.7419	3.40	1.2238	4.70	1.5476	6.00	1.7918	13.00	2.5649
2.15	0.7655	3.45	1.2384	4.75	1.5581	6.10	1.8083	14.00	2.6391
2.20	0.7885	3.50	1.2528	4.80	1.5686	6.20	1.8245	15.00	2.7081
2.25	0.8109	3.55	1.2669	4.85	1.5790	6.30	1.8405	16.00	2.7726

XI.

MOISTURE ABSORBED BY AIR.*

THE QUANTITY OF WATER WHICH AIR IS CAPABLE OF ABSORBING TO THE POINT OF MAXIMUM SATURATION, IN GRAINS PER CUBIC FOOT FOR VARIOUS TEMPERATURES.

Degrees Fahr.	Grains in a Cubic Foot.	Degrees Fahr.	Grains in a Cubic Foot.
— 20	0.219	55	4.849
— 10	0.356	57	5.191
— 5	0.450	60	5.744
0	0.564	62	6.142
5	0.705	65	6.782
10	0.873	67	7.241
15	1.075	70	7.980
20	1.321	72	8.508
25	1.611	75	9.356
30	1.958	77	9.961
32	2.113	80	10.933
35	2.366	85	12.736
40	2.849	90	14.791
45	3.414	95	17.124
50	4.076	100	19.766
52	4.372	105	22.751

XII.

RELATIVE HUMIDITY OF THE AIR.*

Difference of Temperature, Wet and Dry Bulb.	Temperature of the Air.		
	32° F.	70° F.	90° F.
0.5	95	98	98
1	90	95	96
2	79	90	92
3	69	86	88
4	59	81	85
5	50	77	81
6	40	72	78
7	31	68	75
8	21	64	71
9	12	60	68
10	3	55	65
12	.....	48	59
14	.....	40	53
16	.....	33	47
18	.....	26	41
20	.....	19	36
22	.....	13	32
24	.....	7	26

* From Weather Bulletin No. 127, U. S. Dept. of Agriculture, 1897, for barometer 92.4.

XIII.

(Page 202.)

TABLE OF BEAUMÉ'S HYDROMETER SCALE WITH CORRESPONDING SPECIFIC GRAVITIES.

FOR LIQUIDS LIGHTER THAN WATER. TEMP. 60° FAHR.

Beaumé.	Specific Gravity.	Beaumé.	Specific Gravity.	Beaumé.	Specific Gravity.	Beaumé.	Specific Gravity.
10	1.0000	31	0.8695	52	0.7692	73	0.6896
11	0.9929	32	0.8641	53	0.7650	74	0.6863
12	0.9859	33	0.8588	54	0.7608	75	0.6829
13	0.9790	34	0.8536	55	0.7567	76	0.6796
14	0.9722	35	0.8484	56	0.7526	77	0.6763
15	0.9655	36	0.8433	57	0.7486	78	0.6730
16	0.9589	37	0.8383	58	0.7446	79	0.6698
17	0.9523	38	0.8333	59	0.7407	80	0.6666
18	0.9459	39	0.8284	60	0.7368	81	0.6635
19	0.9395	40	0.8235	61	0.7329	82	0.6604
20	0.9333	41	0.8187	62	0.7290	83	0.6573
21	0.9271	42	0.8139	63	0.7253	84	0.6542
22	0.9210	43	0.8092	64	0.7216	85	0.6511
23	0.9150	44	0.8045	65	0.7179	86	0.6481
24	0.9090	45	0.8000	66	0.7142	87	0.6451
25	0.9032	46	0.7954	67	0.7106	88	0.6422
26	0.8974	47	0.7909	68	0.7070	89	0.6392
27	0.8917	48	0.7865	69	0.7035	90	0.6363
28	0.8860	49	0.7821	70	0.7000		
29	0.8805	50	0.7777	71	0.6965		
30	0.8750	51	0.7734	72	0.6930		

FOR LIQUIDS HEAVIER THAN WATER. TEMP. 60° FAHR.

Beaumé.	Specific Gravity.	Beaumé.	Specific Gravity.	Beaumé.	Specific Gravity.	Beaumé.	Specific Gravity.
1	1.0069	19	1.1507	37	1.3425	55	1.6111
2	1.0139	20	1.1600	38	1.3551	56	1.6292
3	1.0211	21	1.1693	39	1.3679	57	1.6477
4	1.0283	22	1.1788	40	1.3809	58	1.1666
5	1.0357	23	1.1885	41	1.3942	59	1.6860
6	1.0431	24	1.1983	42	1.4077	60	1.7056
7	1.0507	25	1.2083	43	1.4215	61	1.7261
8	1.0583	26	1.2184	44	1.4356	62	1.7469
9	1.0661	27	1.2288	45	1.4500	63	1.7682
10	1.0740	28	1.2393	46	1.4646	64	1.7901
11	1.0820	29	1.2500	47	1.4795	65	1.8125
12	1.0902	30	1.2608	48	1.4949	66	1.8354
13	1.0984	31	1.2719	49	1.5104	67	1.8589
14	1.1068	32	1.2831	50	1.5263	68	1.8831
15	1.1153	33	1.2946	51	1.5425	69	1.9079
16	1.1240	34	1.3063	52	1.5591	70	1.9333
17	1.1328	35	1.3181	53	1.5760		
18	1.1417	36	1.3302	54	1.5934		

XIV.

COMPOSITION OF VARIOUS FUELS OF THE UNITED STATES.

Mine or Name.	Locality.	Coal as Received.					B. T. U. per lb. Comb.	
		Fixed C.	Vol. Matter.	Ash.	Water	B. T. U.		
Mount Pleasant	Scranton, Pa	80.54	7.54	10.65	1.27	12,307	13.973	Anthracite.
Exeter (Rice)	Pittston, Pa	79.41	8.16	12.18	.25	12,400	14.160	
Exeter	"	74 73	5.71	18.90	.66	11,360	14.122	
Coxe's No. 1	Scranton, Pa., Slate out	87.96	2.50	6.77	2.97	13.324	14.760	
No. 11 Forty-foot	Scranton, Pa	83.98	4.99	9 91	1.12	12.903	14.503	
York Farm (Bkwt)	Schuylkill Co., Pa	75 29	5.47	18.43	.81	11,430	14.152	
Jermyn	Pottsville, Pa	81 68	5.78	10.84	1.70	12,036	13.760	
Cayuga	Scranton, Pa	84.46	5 37	9.20	.97	12,294	13.684	
Manville Shaft	"	85.70	5.95	7 51	1.04	12,934	14.120	
Avondale	"	86.68	5.89	6.15	1.28	13.051	14.095	
Oxford	"	91.45	5.03	2.17	1 35	13.254	13.736	
Continental	"	83.13	5.98	9 62	1 27	12.943	14.525	
Woodward	"	79.23	3 73	13 71	3.33	12,149	14.642	
Cumberland	Maryland	75 50	17.00	6 oc	1 50	14.700	15.900	Semi-bituminous.
Eureka	Pennsylvania	70 47	23.86	4.87	.80	14.195	15.046	
Antrim	"	69 30	18.57	10 90	1.23	13.528	15,397	
Long Valley	Towanda, Pa	67.32	25 01	11.12	1.55	12,965	14.845	
New River	West Virginia	72.90	20.42	5.00	1.18	15.200	16.200	
Pocahontas	"	68.88	21.81	6.75	2 56	14.580	16,070	
Cardiff	Wales	67.45	20.41	11 33	.81	12.789	14.555	
Union	Jerome Park, Colo.	52.86	36.70	8.44	2.00	13,650	15,240	Bituminous.
New Castle (Lump)	New Castle, Colo	50.80	35.80	10 90	2.50	11,900	13.750	
Mt. Olive (Lump)	Illinois	44.10	33 10	14.70	8 10	10.600	13.730	
Big Muddy	"	53.80	30.70	8.00	7.50	12.400	14.675	
Streator (Lump)	Streator, Ill	44 30	36 35	11 40	7.95	11.600	14.380	
Gillespie	Illinois	49 55	39.94	11 74	3.77	10.506	12.425	
Ladd (Lump)	"	42.45	32 30	13.25	12.00	10,900	14.583	
Wilmington (Lump)	Wilmington, Ill	39.90	32.80	11 80	15.50	10.200	14.030	
Indiana Block	Brazil, Ind	58 70	30.60	11.00	9.70	11,300	14.250	
New Pittsburgh	Indiana Block	40.40	42.23	11.48	5 89	11.546	13.973	
Vanderpool (Lump)	Kentucky	54.60	34.10	7.30	4.00	12.800	14.430	
Wills Creek	Ohio	46 65	36.23	11.63	5 49	12.060	14.550	
Jackson Hill	"	55.50	30.72	10 90	2 88	11 800	13,685	
Hocking Valley	"	48 90	36.30	8 30	6.50	12.012	14,100	
Brier Hill	"	56 30	34.60	4.30	4 80	12.900	14.200	
Weilsville	"	40.55	33 50	15 50	1.45	12 400	14,930	
Goshen	"	49 83	38.03	6 91	5 23	11.966	13.619	
Hastings	Nebraska	60.88	27.82	11.09	.21	12.935	14.583	
Turtle Creek	Monongahela R., Pa.	59 45	34.22	4 22	2 11	14.150	15.107	
Youghiogheny	Pennsylvania	54 00	32.25	12 50	1.25	12.900	14.958	
Trotter	Connellsville, Pa	58 90	28 27	9 83	3.00	12.539	14.386	
Reynoldsville	Pennsylvania	59 04	30.77	9.16	1 03	14.142	15.746	
Pittsburgh	"	53 30	34.60	9.70	2.40	12.400	14.107	
Summer Hill (Slack)	"	50 60	33.00	12 40	3 00	12.750	15 250	
Monongahela	Monongahela R., Pa.	58.61	31.29	7 83	2.27	13.126	14.600	
Leisenring	Connellsville, Pa	63 26	28.71	6 10	1.93	15,005	16,313	
Cannell	Peyton, W. Va	41 32	42 84	11.36	.48	12.224	14.523	
Cooperstown	Nova Scotia	64 44	30.42	4 03	1.11	15,266	16,091	

ANALYSES OF ASH.

	Specific Grav.	Color of Ash.	Silica.	Alumina.	Oxide Iron.	Lime.	Magnesia.	Loss.	Acids S.&P.
Pennsylvania Anthracite	1.559	Reddish Buff.	45.6	42.75	9.43	1.41	0.33	0.48	....
" Bituminous	1.372	Gray.	76.0	21.00	2.60	....	..	0.40	....
Welsh Anthracite	1.32	....	40.0	44.8	....	12.0	trace	....	2.97
Scotch Bituminous	1.26	...	37.6	52.0	....	3.7	1.1	....	5.02
Lignite	1.27	....	19.3	11.6	5.8	23.7	2.6	....	33.8

XV.

(Page 340.)

PROPERTIES OF SATURATED STEAM.

NOTE.—The following table gives the data required by the engineer in this connection as based upon the experiments of Regnault. The temperatures, pressures, and heat-measures are all from Regnault's experiments. The other quantities were calculated by Mr. R. H. Buel,* adopting the formulas of Rankine already given to obtain quantities not ascertained by direct experiment. The two parts of the latent heat of vaporization are separately determined, and the internal thus distinguished from the external work of expansion. British measures are adopted. The nomenclature is sufficiently well explained by the table-headings.

Pressure above a vacuum, in pounds per square inch.	Temperature, Fahrenheit degrees.	Quantities of Heat. In British Thermal Units. Required to raise the temperature of the water from 32° to T°.	Internal latent heat.	External latent heat.	Latent heat of evaporation at pressure P $= I + E$.	Total heat of evaporation above 32° $= S + L$.	Total heat of evaporation above 32°, in units of evaporation.	Weight of a cubic foot of steam, in pounds.	Volume. Of a pound of steam in cubic feet.	Volume. Ratio of volume of steam to volume of equal weight of distilled water at temperature of maximum density.	Pressure above a vacuum, in pounds per square inch.
p	t	q or S	ρ or I	$A P u_0$, E	r or L	λ or H	U	δ or W	v or C	V	p
1	102.018	70.040	981.396	61.619	1043.015	1113.055	1.1522	.003027	330.4	20,623	1
2	126.302	94.368	961.980	64.114	1026.094	1120.462	1.1599	.005818	171.9	10,730	2
3	141.654	109.764	949.725	65.655	1015.380	1125.144	1.1647	.008522	117.3	7,325	3
4	153.122	121.271	940.597	66.773	1007.370	1128.641	1.1683	.011172	89.51	5,588	4
5	162.370	130.563	933.239	67.660	1000.899	1131.462	1.1712	.013781	72.56	4,530	5
6	170.173	138.401	927.038	68.403	995.441	1133.842	1.1737	.016357	61.14	3,816	6
7	176.945	145.213	921 654	69.041	990.695	1135.908	1.1758	.018908	52.89	3,302	7
8	182.952	151.255	916 883	69.602	986.485	1137.740	1.1777	.021436	46.65	2,912	8
9	188.357	156.699	912.584	70.106	982.690	1139.389	1.1794	.023944	41.77	2,607	9
10	193.284	161.660	908.672	70.560	979.232	1140.892	1.1810	.026437	37.83	2,361	10
11	197.814	166.225	905.083	70.967	976.050	1142.275	1.1824	.028911	34.59	2,159	11
12	202.012	170.457	901.766	71.332	973.098	1143.555	1.1837	.031376	31.87	1,990	12
13	205.929	174.402	898.683	71.663	970.346	1144.748	1.1849	.033828	29.56	1,845	13
14	209.604	178.112	895.784	71.973	967.757	1145.869	1.1861	.036265	27.58	1,721	14
14.69	212.000	180.531	893.894	72.175	966.069	1146.600	1.1869	.037928	26.37	1,646	14.69
15	213.067	181.608	893.044	72.274	965.318	1146.926	1.1872	.038688	25.85	1,614	15
16	216.347	184.919	890 458	72.549	963 007	1147 926	1 1882	041109	24 33	1,513	16
17	219.452	188.056	888.007	72.811	960.818	1148 874	1.1892	.043519	22.98	1,434	17

* Weisbach's Mechanics, vol II., part II., Dubois' translation. N. Y.: J. Wiley & Sons. 1884.

ϕ	t	q or S	ρ or I	APu or E	ν or L	λ or H	U	δ or W	v or C	V	ϕ
18	222.424	191.058	885.661	73.060	958.721	1149 779	1.1901	.045920	21.78	1,359	18
19	225.255	193.918	883.427	73.298	956.725	1150.643	1.1910	.048312	20.70	1,292	19
20	227.964	196.655	881.289	73.525	954.814	1151.469	1.1919	.050696	19.73	1,231	20
21	230.565	199.285	879 239	73.739	952.978	1152.263	1.1027	.053074	18.84	1,176	21
22	233.069	201.817	877.267	73.942	951.209	1153.026	1.1935	.055446	18.04	1,126	22
23	238 479	204.258	875.368	74.136	949.504	1153.762	1.1943	.057812	17.30	1,080	23
24	237.803	206.610	873.538	74.323	947.861	1154.471	1.1950	.060171	16.62	1,038	24
25	240.053	208.887	871.767	74.503	946.270	1155.157	1.1957	.062524	16.00	998.4	25
26	242.225	211.089	870.052	74.678	944 730	1155.819	1.1964	.064870	15.42	962.3	26
27	244.333	213.223	868.391	74.847	943.238	1156.461	1.1971	.067210	14.88	928.8	27
28	246.376	215.293	866.780	79.011	941 791	1157.084	1.1978	.069545	14.38	897.6	28
29	248.363	217.308	865.215	75.168	940.383	1157.691	1.1984	.071875	13.91	868.5	29
30	250.293	219.261	863.700	75.319	939.019	1158.280	1.1990	.074201	13.48	841.3	30
31	252 171	221.165	862.221	75.466	937 687	1158.852	1.1996	.076522	13.07	815.8	31
32	254.002	223 021	860.781	75.608	936.389	1159.410	1.2002	.078839	12.68	791.8	32
33	255.782	224.827	859.382	75.745	935.127	1159.954	1.2008	.081152	12.32	769.2	33
34	257.523	226 594	858.013	75.878	933.891	1160.485	1.2013	.083461	11.98	748.0	34
35	259 221	228.316	856.680	76.007	932.687	1161.003	1.2018	.085766	11.66	727.9	35
36	260.883	230.001	855.375	76.133	931.508	1161.509	1.2023	.088067	11.36	708.8	36
37	262.505	231.650	854.099	76.255	930.354	1162.004	1.2028	.090364	11.07	690.8	37
38	264.093	233.261	852.852	76.375	929.227	1162.488	1.2033	.092657	10.79	673.7	38
39	265.647	234.840	851.629	76 493	928.122	1162.962	1.2038	.094946	10.53	657.5	39
40	267.163	236.386	850.432	76.608	927.040	1163.426	1.2043	.097231	10.28	642.0	40
41	268.660	237.902	849.261	76 719	925.980	1163.882	1.2048	.099514	10.05	627.3	41
42	270.122	239.389	848.113	76.827	924.940	1164.329	1.2053	.101794	9.826	613.3	42
43	271.557	2,0.846	846.988	76 932	923.920	1164.766	1.2058	.104071	9.609	599.9	43
44	272.965	242.275	845.884	77.035	922.919	1165.194	1.2062	.106345	9.403	587.0	44
45	274.347	243.680	844.709	77.136	921.935	1165.615	1.2066	.108616	9.207	574.7	45
46	275.704	245.061	843.733	77.235	920.968	1166.029	1.2070	.110884	9.018	563.0	46
47	277.036	246.418	842.687	77.331	920.018	1166 436	1.2074	.113149	8.838	551.7	47
48	278.348	247.752	841.659	77.425	919.084	1166.836	1.2078	.115411	8 665	540.9	48
49	279.637	249.064	840.647	77.517	918.164	1167.228	1.2082	.117670	8.498	530.5	49
50	280.904	250.355	839.653	77.607	917.260	1167.615	1.2086	.119927	8.338	520.5	50
51	282.151	251.624	838.675	77.696	916 371	1167.995	1.2090	.122181	8.185	510.9	51
52	283.381	252.875	837.740	77.784	915.494	1168.369	1.2094	.124433	8.037	501.7	52
53	284.589	254.106	836.762	77.870	914.632	1168.738	1.2098	.126682	7.894	492.8	53
54	285.781	255.321	835.827	77.954	913.781	1169.102	1.2102	.128928	7.756	484.2	54
55	286.955	256.518	834.906	78.036	912.942	1169.460	1.2106	.131172	7.624	475.9	55
56	288.111	257.695	834.001	78.117	912.118	1169.813	1.2110	.133414	7.496	467.9	56
57	289.251	258.857	933.108	78.196	911.304	1170.161	1.2114	.135654	7.372	460.2	57

PROPERTIES OF SATURATED STEAM—(*Continued*).

Pressure above a vacuum, in pounds per square inch.	Temperature, Fahrenheit degrees.	Quantities of Heat. In British Thermal Units. Required to raise the temperature of the water from 32° to $T°$.	Internal latent heat.	External latent heat.	Latent heat of evaporation at pressure P $= I + E$.	Total heat of evaporation above 32° $= S + L$.	Total heat of evaporation above 32°, in units of evaporation.	Weight of a cubic foot of steam, in pounds.	Volume. Of a pound of steam in cubic feet.	Volume. Ratio of volume of steam to volume of equal weight of distilled water at temperature of maximum density.	Pressure above a vacuum, in pounds per square inch.
p	t	q or S	ρ or I	APu or E	r or L	λ or H	U	δ or W	v or C	V	p
58	290.374	260.002	832.228	78.273	910.501	1170.503	1.2117	.137892	7.252	452.7	58
59	291.483	261.132	831.361	78.348	909.709	1170.841	1.2120	.140128	7.136	445.5	59
60	292.575	262.248	830.507	78.421	908.928	1171.176	1.2123	.142362	7.024	438.5	60
61	293.653	263.348	829.663	78.494	908.157	1171.505	1.2127	.144594	6.916	431.7	61
62	294.717	264.433	828.830	78.566	907.396	1171.829	1.2132	.146824	6.811	425.2	62
63	295.768	265.506	828.005	78.638	906.643	1172.149	1.2133	.149052	6.709	418.8	63
64	296.805	266.566	827.191	78.709	905.900	1172.466	1.2136	.151277	6.610	412.6	64
65	297.830	267.612	826.388	78.779	905.167	1172.779	1.2140	.153500	6.515	406.6	65
66	298.842	268.644	825.596	78.847	904.443	1173.087	1.2143	.155721	6.422	400.8	66
67	299.843	269.666	824.814	78.913	903.727	1173.393	1.2146	.157940	6.332	395.2	67
68	300.831	270.674	824.042	78.978	903.020	1173.694	1.2149	.160157	6.244	389.8	68
69	301.807	271.669	823.280	79.042	902.322	1173.991	1.2152	.162372	6.159	384.5	69
70	302.774	272.657	822.524	79.105	901.629	1174.286	1.2155	.164584	6.076	379.3	70
71	303.728	273.633	821.778	79.167	900.945	1174.578	1.2158	.166794	5.995	374.3	71
72	304.669	274.597	821.041	79.228	900.269	1174.866	1.2161	.169003	5.917	369.4	72
73	305.603	275.550	820.312	79.288	899.600	1175.150	1.2164	.171210	5.841	364.6	73
74	306.526	276.493	819.589	79.349	898.938	1175.431	1.2167	.173417	5.767	360.0	74
75	307.440	277.427	818.873	79.410	898.283	1175.710	1.2170	.175622	5.694	355.5	75
76	308.344	278.350	818.166	79.469	897.635	1175.985	1.2173	.177825	5.624	351.1	76

p	t	q or S	p or I	A Pu or B	r or L	λ or H	U	ϕ or W	v or C	V	p
77	309.339	279 265	817.468	79.526	896.994	1176.259	1.2176	.180027	5.555	346.8	77
78	310.123	280.170	816.777	79.582	896.359	1176.529	1.2179	.182229	5.488	342.6	78
79	311.000	281.066	816.090	79.639	895.729	1176 795	1.2181	.184429	5.422	338.5	79
80	311.866	281.952	815.413	79.695	895.108	1177.060	1.2184	.186627	5.358	334.5	80
81	312.725	282.830	814.742	79.749	894.491	1177.321	1.2187	.188823	5.296	330.6	81
82	313.576	283.701	814.077	79.802	893.879	1177.580	1.2190	.191017	5.235	326.8	82
83	314.417	284.562	813.419	79.856	893.275	1177.837	1.2193	.193210	5.176	323.1	83
84	315.250	285.414	812.768	79.909	892.677	1178.091	1.2195	.195401	5.118	319.5	84
85	316.076	286.260	812.122	79.961	892.083	1178.343	1.2198	.197591	5.061	315.9	85
86	316.893	287.096	811.484	80.012	891.496	1178.592	1.2200	.199781	5.006	312.5	86
87	317.705	287.927	810.850	80.063	890.913	1178.840	1.2203	.201969	4 951	309.1	87
88	318.510	288.750	810.222	80.113	890.335	1179.085	1.2205	.204155	4.898	305 8	88
89	319.306	289.565	809.601	80.162	889.763	1179.328	1.2208	.206340	4 846	302.5	89
90	320.094	290.373	808.986	80.210	889.196	1179.569	1.2210	.208525	4.796	299.4	90
91	320.877	291.176	808.375	80.258	888.633	1179.809	1.2212	.210709	4.746	296.3	91
92	321.653	291.970	807.770	80 305	888 075	1180.045	1.2215	.212892	4.697	293.2	92
93	322.422	292.758	807.170	80 351	887.521	1180.279	1.2217	.215074	4.650	290.2	93
94	323.183	293.539	806.575	80 397	886.972	1180.511	1.2220	.217253	4.603	287.3	94
95	323.939	294.314	805.985	80.442	886.427	1180.741	1.2222	.219430	4.557	284.5	95
96	324.688	295.083	805.400	80.487	885.887	1180.970	1.2224	.221604	4.513	281.7	96
97	325.431	295.845	804.821	80.531	885.352	1181.197	1.2227	.223778	4.469	279.0	97
98	326.169	296.601	804.245	80.576	884.821	1181.422	1.2229	.225950	4.426	276.3	98
99	326.900	297.350	803.675	80.620	884.295	1181.645	1.2232	.228122	4.384	273.7	99
100	327.625	298.093	803.108	80.665	883.773	1181.866	1.2234	.230293	4.342	271.1	100
101	328.345	298.832	802.544	80.709	883.253	1182.085	1 2236	.232464	4.302	268 5	101
102	329.060	299.566	801.985	80.752	882.737	1182.303	1 2238	.234634	4.262	266.0	102
103	329.769	300.293	801.432	80.794	882.226	1182.519	1.2240	.236803	4.223	263.6	103
104	330.471	301.014	800.884	80.835	881.719	1182.733	1.2242	.238972	4.185	261.2	104
105	331.169	301.731	800.339	80.875	881.214	1182.945	1.2245	.241139	4.147	258.9	105
106	331.862	302.444	799.796	80.916	880.712	1183.156	1.2247	.243304	4.110	256.6	106
107	332 550	303.152	799.258	80.956	880.214	1183.366	1.2249	.245467	4.074	254.3	107
108	333.232	303.854	798.725	80.995	879.720	1183.574	1.2251	.247629	4.038	252 1	108
109	333.911	304.551	798.196	81.034	879.230	1183.781	1.2254	.249789	4.003	249.9	109
110	334.582	305.242	797.672	81.072	878.744	1183.986	1.2256	.251947	3.969	247.8	110
111	335.250	305.927	797.153	81.110	878.263	1184.190	1.2258	.254105	3.935	245 7	111
112	335.914	306.609	796.637	81.147	877.784	1184.393	1.2260	.256263	3.902	243.6	112
113	336.573	307.285	796.125	81.184	877.309	1184.594	1.2262	.258420	3 870	241.6	113
114	337.226	307.956	795.617	81.221	876.838	1184.794	1.2264	.260576	3.838	239.6	114
115	337.874	308.621	795.114	81.257	876.371	1184.992	1.2266	.262732	3.806	237 6	115
116	338.518	309.281	794.614	81.293	675.907	1185.188	1.2268	.264887	3.775	235.7	116
117	339.159	309.939	794.114	81.330	875.444	1185.383	1.2270	.267041	3.745	233.8	117

PROPERTIES OF SATURATED STEAM—(*Continued*).

Pressure above a vacuum, in pounds per square inch.	Temperature, Fahrenheit degrees.	Quantities of Heat. In British Thermal Units. Required to raise the temperature of the water from 32° to T°.	Internal latent heat.	External latent heat.	Latent heat of evaporation at pressure P $= I + E$.	Total heat of evaporation above 32° $= S + L$.	Total heat of evaporation above 32°, in units of evaporation.	Weight of a cubic foot of steam, in pounds.	Volume. Of a pound of steam in cubic feet.	Ratio of volume of steam to volume of equal weight of distilled water at temperature of maximum density.	Pressure above a vacuum, in pounds per square inch.
p	t	q or S	ρ or I	$A\,Pu$ or E	r or L	λ or H	U	δ or W	v or C	V	p
118	339.706	310.592	793.619	81.366	874.985	1185.577	1.2272	.269195	5.715	231.9	118
119	340.430	311.241	793.126	81.403	874.529	1185.770	1.2274	.271348	3.685	230.1	119
120	341.058	311.885	792.637	81.439	874.076	1185.961	1.2276	.273500	3.656	228.3	120
121	341.681	312.524	792.152	81.474	873.626	1186.150	1.2278	.275651	3.628	226.5	121
122	342.300	313.161	791.669	81.509	873.178	1186.339	1.2280	.277801	3.600	224.7	122
123	342.916	313.795	791.189	81.543	872.732	1186.527	1.2282	.279949	3.572	223.0	123
124	343.528	314.425	790.711	81.578	872.289	1186.714	1.2284	.282097	3.545	221.3	124
125	344.136	315.051	790.236	81.612	871.848	1186.899	1.2286	.284243	3.518	219.6	125
126	344.741	315.672	789.765	81.646	871.411	1187.083	1.2288	.286389	3.492	218.0	126
127	345.340	316.289	789.298	81.679	870.977	1187.266	1.2290	.288533	3.466	216.4	127
128	345.936	316.903	788.834	81.711	870.545	1187.448	1.2292	.290677	3.440	214.8	128
129	346.530	317.513	788.374	81.742	870.116	1187.629	1.2293	.292820	3.415	213.2	129
130	347.121	318.121	787.914	81.774	869.688	1187.809	1.2295	.294961	3.390	211.6	130
131	347.706	318.725	787.458	81.805	869.263	1187.988	1.2296	.297102	3.366	210.1	131
132	348.287	319.325	787.004	81.837	868.841	1188.166	1.2298	.299242	3.342	208.6	132
133	348.867	319.922	786.554	81.868	868.422	1188.344	1.2300	.301382	3.318	207.1	133
134	349.443	320.515	786.105	81.900	868.005	1188.520	1.2302	.303521	3.295	205.7	134
135	350.015	321.105	785.659	81.931	867.590	1188.695	1.2304	.305659	3.272	204.2	135
136	350.584	321.692	785.215	81.962	867.177	1188.869	1.2306	.307797	3.249	202.8	136
137	351.149	322.274	784.775	81.992	866.767	1189.041	1.2308	.309934	3.227	201.4	137
138	351.711	322.853	784.339	82.021	866.360	1189.213	1.2309	.312070	3.204	200.0	138

p	t	q or S	ρ or I	$A\,Pu$ or E	r or L	λ or H	U	δ or W	v or C	V	ϕ
139	352.271	323.429	783.005	82.050	865.955	1189.384	1.2311	.314205	3.182	198.7	139
140	352.827	324.003	782.472	82.080	865.552	1189.555	1.2313	.316338	3.161	197.3	140
141	353.380	324.573	783.042	82.109	865.151	1189.724	1.2315	.318471	3.140	196.0	141
142	353.931	325.141	782.613	82.138	864.751	1189.892	1.2316	.320603	3.119	194.7	142
143	354.478	325.705	782.188	82.166	864.354	1190.059	1.2318	.322735	3.099	193.4	143
144	355.022	326.265	781.766	82.194	863.960	1190.225	1.2320	.324867	3.078	192.2	144
145	355.562	326.823	781.346	82.221	863.567	1190.390	1.2321	.326998	3.058	190.9	145
146	356.100	327.378	780.927	82.249	863.176	1190.554	1.2323	.329128	3.038	189.7	146
147	356.636	327.930	780.510	82.277	862.787	1190.717	1.2324	.331257	3.019	188.5	147
148	357.169	328.479	780.096	82.304	862.400	1190.879	1.2326	.333386	3.000	187.3	148
149	357.697	329.024	779.684	82.332	862.016	1191.040	1.2328	.335515	2.981	186.1	149
150	358.223	329.566	779.275	82.359	861.634	1191.200	1.2330	.337643	2.962	184.9	150
160	363.343	334.850	775.296	82.616	857.912	1192.762	1.2346	.358886	2.786	173.9	160
170	368.226	339.892	771.505	82.854	854.359	1194.251	1.2361	.380071	2.631	164.3	170
180	372.886	344.708	767.891	83.072	850.963	1195.671	1.2376	.401201	2.493	155.6	180
190	377.352	349.329	764.430	83.273	847.703	1197.032	1.2390	.422280	2.368	147.8	190
200	381.636	353.766	761.111	83.462	844.573	1198.339	1.2404	.443310	2.256	140.8	200
210	385.759	358.041	757.916	83.640	841.556	1199.597	1.2417	.464295	2.154	134.5	210
220	389.730	362.168	754.834	83.808	838.642	1200.810	1.2430	.485237	2.061	128.7	220
230	393.575	366.152	751.852	83.966	835.828	1201.980	1.2442	.506139	1.976	123.3	230
240	397.285	370.008	748.958	84.115	833.103	1203.111	1.2453	.527003	1.898	118.5	240
250	400.883	373.750	746.243	84.256	830.459	1204.209	1.2465	.547831	1.825	114.0	250
260	404.370	377.377	743.508	84.388	827.896	1205.273	1.2476	.568626	1.759	109.8	260
270	407.755	380.905	740.831	84.510	825.401	1206.306	1.2487	.589390	1.697	105.9	270
280	411.048	384.337	738.250	84.624	822.973	1207.310	1.2497	.610124	1.639	102.3	280
290	414.250	387.677	735.858	84.731	820.609	1208.286	1.2507	.630829	1.585	99.0	290
300	417.371	390.933	733.470	84.835	818.305	1209.238	1.2517	.651506	1.535	95.8	300
350	431.96	406.26	722.20	85.28	807.48	1213.74	1.256	.754534	1.325	82.7	350
400	444.92	419.76	712.34	85.60	797.94	1217.70	1.260	.857185	1.167	72.8	400
450	456.62	432.18	703.28	85.84	789.12	1221.30	1.264	.959536	1.042	65.1	450
500	467.42	443.52	695.01	86.01	781.02	1224.54	1.267	1.061700	.942	58.8	500
550	477.50	454.14	687.34	86.12	773.46	1227.60	1.270	1.16380	.859	53.6	550
600	486.86	464.22	680.08	86.18	766.26	1230.48	1.273	1.26536	.790	49.3	600
650	495.68	473.58	673.40	86.20	759.60	1233.18	1.276	1.36791	.731	45.6	650
700	504.14	482.40	667.11	86.19	753.30	1235.70	1.279	1.46935	.680	42.4	700
750	512.06	490.86	661.04	86.14	747.18	1238.04	1.282	1.57198	.636	39.6	750
800	519.62	498.88	665.34	86.08	741.42	1240.30	1.285	1.67401	.597	37.1	800
850	526.82	506.66	649.84	86.00	735.84	1242.50	1.287	1.77603	.563	34.9	850
900	533.66	514.03	644.71	85.91	730.62	1244.65	1.289	1.87804	.532	33.0	900
950	540.32	521.30	639.60	85.80	725.40	1246.70	1.291	1.98004	.505	31.4	950
1000	546.80	528.30	634.68	85.63	720.30	1248.65	1.293	2.08203	.480	30.0	1000

XVI.

ENTROPY OF WATER AND STEAM.

Absolute Pressure, Pounds per Square Inch.	Entropy per Pound. B.T.U.		Absolute Pressure, Pounds per Square Inch.	Entropy per Pound. B.T.U.	
	Water.	Steam.		Water.	Steam.
1	0.134	1.987	115	0.490	1.586
2	0.175	1.924	120	0.494	1.583
3	0.201	1.887	125	0.498	1.580
4	0.220	1.861	130	0.501	1.577
5	0.235	1.841	135	0.505	1.574
6	0.247	1.825	140	0.508	1.571
7	0.257	1.814	145	0.512	1.569
8	0.268	1.800	150	0.515	1.566
9	0.277	1.790	155	0.518	1.563
10	0.285	1.781	160	0.521	1.561
15	0.315	1.747	165	0.524	1.559
20	0.338	1.722	170	0.527	1.557
25	0.356	1.704	175	0.530	1.555
30	0.370	1.689	180	0.533	1.552
35	0.384	1.677	185	0.536	1.550
40	0.395	1.666	190	0.539	1.548
45	0.405	1.657	195	0.542	1.546
50	0.415	1.649	200	0.544	1.545
55	0.423	1.641	205	0.547	1.543
60	0.431	1.634	210	0.549	1.541
65	0.438	1.628	215	0.551	1.540
70	0.444	1.623	220	0.554	1.538
75	0.450	1.617	230	0.559	1.535
80	0.455	1.612	240	0.563	1.532
85	0.461	1.608	250	0.567	1.529
90	0.466	1.604	260	0.571	1.526
95	0.476	1.596	270	0.575	1.523
100	0.480	1.593	280	0.579	1.520
105	0.482	1.593	290	0.583	1.518
110	0.485	1.590	300	0.587	1.515

XVII.

(Page 302.)

DISCHARGE OF STEAM IN POUNDS PER HOUR CALCULATED BY NAPIER'S FORMULA.

Absolute Pressure. Pounds.	Pounds of Steam.		
	Diameter of Orifice $\frac{1}{32}$ inch.	Diameter of Orifice $\frac{1}{16}$ inch.	Diameter of Orifice $\frac{1}{8}$ inch.
1	0.039	0.158	0.631
2	0.079	0.316	1.262
3	0.118	0.473	1.893
4	0.158	0.631	2.524
5	0.197	0.789	3.155
6	0.237	0.947	3.786
7	0.276	1.104	4.417
8	0.315	1.262	5.048
9	0.354	1.420	5.680
10	0.395	1.578	6.311
20	0.789	3.155	12.622
30	1.183	4.733	18.937
40	1.578	6.311	25.244
50	1.972	7.889	31.556
60	2.367	9.467	37.867
70	2.761	11.045	44.178
80	3.156	12.623	50.488
90	3.550	14.200	56.800
100	3.947	15.778	63.115

XVIII.

Page 320.)

PER CENT OF WATER AND STEAM EXHAUSTING INTO ATMOSPHERE.—BY THROTTLING CALORIMETER.

(Per cent of moisture.)

Tempt. in Calorimeter.	Gauge pressure on Main Steam-pipe.								
Degrees Fahr.	40	45	50	55	60	65	70	75	80
215	.0233	.0253	.0271	.0290	.0307	.0322	.0338	.0354	.0368
220	.0207	.0227	.0245	.0263	.0280	.0296	.0311	.0327	.0340
225	.0181	.0201	.0218	.0237	.0253	.0269	.0284	.0300	.0313
230	.0154	.0173	.0192	.0210	.0227	.0242	.0257	.0273	.0287
235	.0128	.0147	.0165	.0184	.0200	.0215	.0230	.0246	.0260
240	.0102	.0122	.0139	.0157	.0173	.0189	.0204	.0219	.0233
245	.0076	.0095	.0112	.0130	.0147	.0162	.0177	.0192	.0206
250	.0049	.0069	.0086	.0104	.0120	.0135	.0150	.0165	.0179
255	.0023	.0042	.0059	.0077	.0093	.0108	.0123	.0138	.0152
260	.0005−	.0016	.0033	.0051	.0066	.0081	.0096	.0111	.0125
265	.0030−	.0010−	.0006	.0024	.0040	.0055	.0069	.0084	.0098
270	.0057−	.0037−	.0020−	.0002−	.0013	.0028	.0042	.0057	.0069
275	.0083−	.0063−	.0047−	.0023−	.0013−	.0001	.0015	.0030	.0042
280	.0109−	.0089−	.0073−	.0050−	.0040−	.0026−	.0011−	.0003	.0015
285	.0136−	.0116−	.0100−	.0082−	.0067−	.0053−	.0038−	.0024−	.0012−
Diff. 1° Fahr	.00052	.00052	.00053	.00053	.00053	.00054	.00054	.00054	.00054

The minus sign indicates superheat.

This amount divided by 0.48 and multiplied by the value of the latent heat will give the degree of superheat.

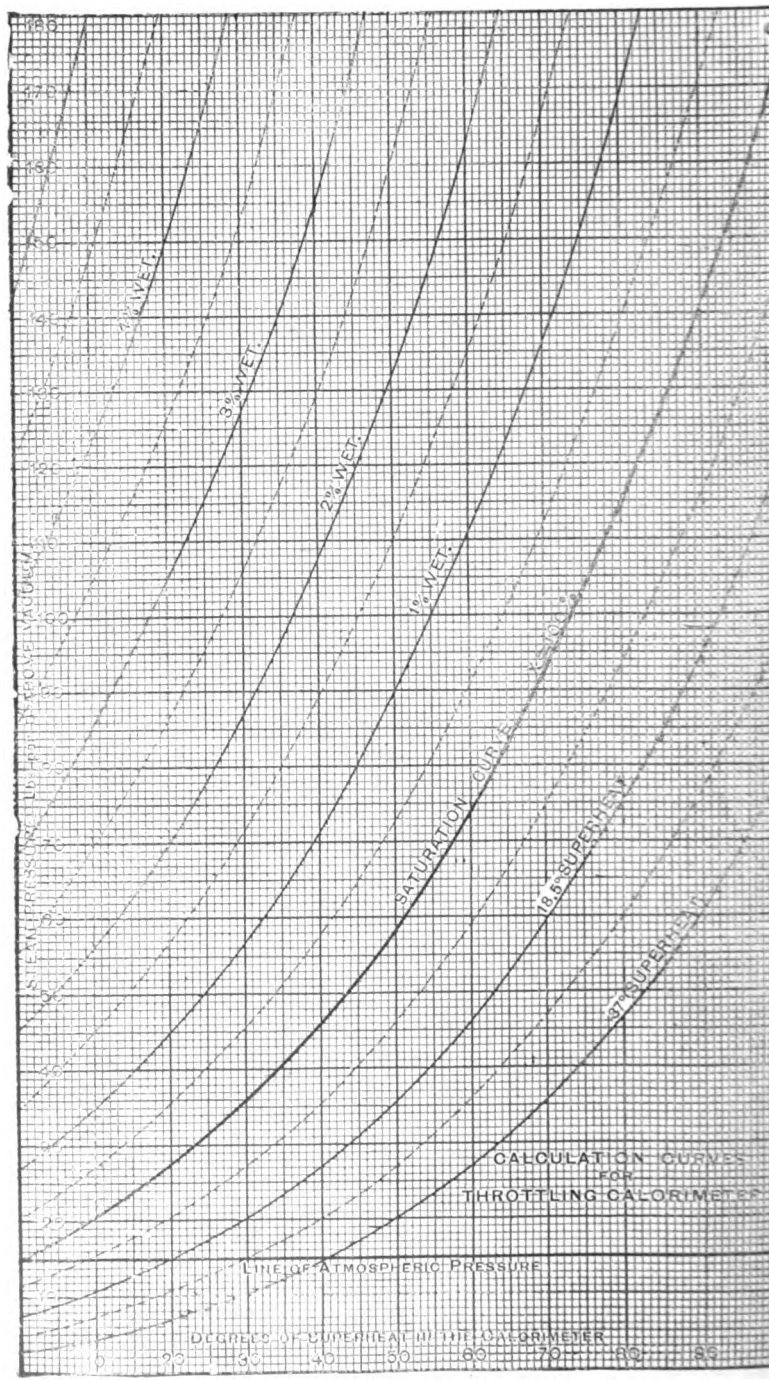

DIAGRAM FOR DETERMINING PER CENT OF MOISTURE FROM READING OF THERMOMETER IN THROTTLING CALORIMETER. (See text, page 475.)

XIX. (Page 493.)

FACTORS OF EVAPORATION.

Temperature of Feed-water in Degrees.		Gauge Pressure in Pounds per Square Inch Above the Atmosphere and in Atmospheres.															
F.	C.	25	30	35	40	45	50	60	70	80	90	100	120	140	160	180	200
		1.7	2.0	2.3	2.7	3.0	3.3	4.0	4.7	5.3	6.0	6.7	8.0	9.3	10.7	12	13.3
32	0	1.204	1.206	1.209	1.211	1.212	1.214	1.217	1.219	1.222	1.224	1.227	1.231	1.234	1.237	1.239	1.241
35	1.6	.201	.203	.206	.208	.209	.211	.214	.216	.219	.221	.224	.228	.231	.234	.236	.238
40	4.4	.196	.198	.201	.203	.204	.206	.209	.211	.214	.216	.219	.223	.226	.229	.231	.233
45	7.2	.190	.192	.195	.197	.198	.200	.203	.205	.208	.210	.213	.217	.220	.223	.225	.227
50	10	.185	.187	.190	.192	.193	.195	.198	.200	.203	.205	.208	.212	.215	.218	.220	.222
55	12.7	.180	.182	.185	.187	.188	.190	.193	.195	.198	.200	.203	.207	.210	.213	.215	.217
60	15.5	.175	.177	.180	.182	.183	.185	.188	.190	.193	.195	.198	.202	.205	.208	.210	.212
65	18.3	.170	.172	.175	.177	.178	.180	.183	.185	.188	.190	.193	.197	.200	.203	.205	.207
70	21.1	.165	.167	.170	.172	.173	.175	.178	.180	.183	.185	.188	.192	.195	.198	.200	.202
75	23.5	.160	.162	.165	.167	.168	.170	.173	.175	.178	.180	.183	.187	.190	.193	.195	.197
80	26.6	.154	.156	.159	.161	.162	.164	.167	.169	.172	.174	.177	.181	.184	.187	.189	.191
85	29.4	.149	.151	.154	.156	.157	.159	.162	.164	.167	.169	.172	.176	.179	.182	.184	.186
90	32.2	.144	.146	.149	.151	.152	.154	.157	.159	.162	.164	.167	.171	.174	.177	.179	.181
95	35.0	.139	.141	.144	.146	.147	.149	.152	.154	.157	.159	.162	.166	.169	.172	.174	.176
100	37.7	.134	.136	.139	.141	.142	.144	.147	.149	.152	.154	.157	.161	.164	.167	.169	.171
105	40.5	.128	.130	.133	.135	.136	.133	.141	.143	.146	.148	.151	.155	.158	.161	.163	.165
110	43.3	.123	.125	.128	.130	.131	.133	.136	.138	.141	.143	.146	.150	.153	.156	.158	.160
115	46.1	.118	.120	.123	.125	.126	.120	.131	.133	.136	.138	.141	.145	.143	.151	.153	.155
120	48.8	.113	.115	.118	.120	.121	.123	.126	.128	.131	.133	.136	.140	.143	.146	.148	.150
125	51.6	.108	.110	.113	.115	.116	.118	.121	.123	.126	.128	.131	.135	.138	.141	.143	.145
130	54.4	.102	.104	.107	.109	.110	.112	.115	.117	.120	.122	.125	.129	.132	.135	.137	.139
135	57.2	.097	.099	.102	.104	.105	.107	.110	.112	.115	.117	.120	.124	.127	.130	.132	.134
140	60.0	.092	.094	.097	.099	.100	.102	.105	.107	.110	.112	.115	.119	.122	.125	.127	.129
145	62.7	.087	.089	.092	.094	.095	.097	.100	.102	.105	.107	.110	.114	.117	.120	.122	.124
150	65.5	.082	.084	.087	.089	.090	.092	.095	.097	.100	.102	.105	.109	.112	.115	.117	.119
155	68.3	.076	.078	.081	.083	.084	.086	.089	.091	.094	.096	.099	.103	.106	.109	.111	.113
160	71.1	.071	.073	.076	.078	.079	.081	.084	.086	.089	.091	.094	.098	.101	.104	.106	.108
165	73.8	.066	.068	.071	.073	.074	.076	.079	.081	.084	.086	.089	.093	.096	.099	.101	.103
170	76.6	.061	.063	.066	.068	.069	.071	.074	.076	.079	.081	.084	.088	.091	.094	.096	.098
175	79.4	.056	.058	.061	.063	.064	.066	.069	.071	.074	.076	.079	.083	.086	.089	.091	.093
180	82.2	.050	.052	.055	.057	.058	.060	.063	.065	.068	.070	.073	.077	.080	.083	.085	.087
185	85.0	.045	.047	.050	.052	.053	.055	.058	.060	.063	.065	.068	.072	.075	.078	.080	.082
190	87.7	.040	.042	.045	.047	.048	.050	.053	.055	.058	.060	.063	.067	.070	.073	.075	.077
195	90.5	.035	.037	.040	.042	.043	.045	.048	.050	.053	.055	.058	.062	.065	.067	.070	.072
200	93.3	.030	.032	.035	.037	.038	.040	.043	.045	.048	.050	.053	.057	.060	.063	.065	.067
205	96.1	.025	.027	.030	.032	.033	.035	.038	.040	.043	.045	.048	.052	.055	.058	.060	.062
210	98.8	.020	.022	.025	.027	.028	.030	.033	.035	.038	.040	.033	.047	.050	.053	.055	.057

TABLE NO. XX.

WROUGHT-IRON WELDED STEAM-, GAS-, AND WATER-PIPE.

TABLE OF STANDARD DIMENSIONS.

Diameter.			Thickness.	Circumference.		Transverse Areas.			Length of Pipe per Square Foot of		Length of Pipe Containing One Cubic Foot.	Nominal Weight per Foot.	Number of Threads per Inch of Screw.
Nominal Internal	Actual External.	Actual Internal.		External.	Internal.	External.	Internal.	Metal.	External Surface.	Internal Surface.			
Inches.	Inches.	Inches.	Inches.	Inches.	Inches.	Sq. In.	Sq. In.	Sq. In.	Feet.	Feet.	Feet.	Pounds.	
⅛	.405	.27	.068	1.272	.848	.129	.0573	.0717	9.44	14.15	2513.	.241	27
¼	.54	.364	.088	1.696	1.144	.229	.1041	.1249	7.075	10.49	1383.3	.42	18
⅜	.675	.494	.091	2.121	1.552	.358	.1917	.1663	5.657	7.73	751.2	.559	18
½	.84	.623	.109	2.639	1.957	.554	.3048	.2492	4.547	6.13	472.4	.837	14
¾	1.05	.824	.113	3.299	2.589	.866	.5333	.3327	3.637	4.635	270.0	1.115	14
1	1.315	1.048	.134	4 131	3.292	1.358	.8626	.4954	2.904	3 645	166.9	1.668	11½
1¼	1.66	1.38	.14	5.215	4.335	2.164	1.496	.668	2.301	2.768	96.25	2.244	11½
1½	1 9	1.611	.145	5.969	5.061	2.835	2.038	.797	2.01	2.371	70.66	2.678	11½
2	2.375	2.067	.154	7.461	6.494	4.43	3.356	1.074	1.608	1.848	42.91	3.609	11½
2½	2.875	2.468	.204	9.032	7.753	6 492	4.784	1.708	1.328	1.547	30.1	5.739	8
3	3 5	3.067	.217	10.996	9 636	9.621	7.388	2.243	1.091	1.245	19.5	7.536	8
3½	4.0	3 548	.226	12.566	11 146	12 566	9.887	2.679	.955	1.077	14.57	9.001	8
4	4.5	4.026	.237	14.137	12.648	15.904	12.73	3.174	.849	.949	11.31	10.665	8
4½	5 0	4.508	.246	15.708	14.162	19.635	15 961	3.674	.764	.848	9.02	12.34	8
5	5.563	5.045	.259	17.477	15.849	24.306	19.99	4.316	.687	.757	7.2	14.502	8
6	6.625	6 065	.28	20.813	19.054	34.472	28.888	5.584	.577	.60	4.98	18.762	8
7	7.625	7.023	.301	23.955	22 063	45.664	38.738	6.926	.501	.544	3.72	23 271	8
8	8.625	7 982	.322	27.096	25.076	58.426	50.04	8.386	.443	.478	2.88	28.177	8
9	9.625	8.937	.344	30.238	28.076	72.76	62.73	10.03	.397	.427	2.29	33.701	8
10	10.75	10.019	.366	33.772	31.477	90 763	78.830	11.924	.355	.382	1.82	40.065	8
11	11.75	11.0	.375	36.914	34.558	108.434	95.033	13.401	.325	.347	1.51	45.028	8
12	12.75	12.0	.375	40.055	37 7	127.677	113.098	14.579	.299	.319	1.27	48.985	8
13	14.0	13.25	.375	43.982	41.626	153.938	137.887	16.051	.273	.288	1.04	53.921	8
14	15.0	14.25	.375	47.124	44 768	176.715	159 485	17 23	.255	.268	.903	57.893	8
15	16.0	15.43	.284	50.26	48.48	201.06	187.04	14 02	.239	.248	.77	47.11	8
16	17.0	16.4	.3	53.41	51.52	226.98	211.24	15.74	.225	.233	.68	52.89	8
17	18.0	17.32	.34	56.55	54.41	254.47	235.61	18.86	.211	.221	.61	63.37	8

XXI.

WEIGHT OF WATER PER CUBIC FOOT FOR VARIOUS TEMPERATURES.*

WEIGHT OF WATER PER CUBIC FOOT, FROM 32° TO 212° F., AND HEAT-UNITS PER POUND, RECKONED ABOVE 32° F.

Temperature, Deg. F.	Weight, Lbs. per Cubic Foot.	Heat-units.	Temperature, Deg. F.	Weight, Lbs. per Cubic Foot.	Heat-units.	Temperature, Deg. F.	Weight, Lbs. per Cubic Foot.	Heat-units.	Temperature, Deg. F.	Weight, Lbs. per Cubic Foot.	Heat-units.
32	62.42	0.	78	62.25	46.03	123	61.68	91.16	168	60.81	136.44
33	62.42	1.	79	62.24	47.03	124	61 67	92 17	169	60 79	137 45
34	62.42	2.	80	62.23	48.04	125	61.65	93.17	170	60 77	138.45
35	62.42	3.	81	62 22	49.04	126	61.63	94.17	171	60.75	139 46
36	62.42	4.	82	62.21	50.04	127	61.61	95.18	172	60 73	140 47
37	62.42	5.	83	62.20	51.04	128	61.60	96 18	173	60 70	141.48
38	62.42	6.	84	62.19	52.04	129	61.58	97.19	174	60 68	142 49
39	62.42	7.	85	62 18	53.05	130	61.56	98.19	175	60.66	143 50
40	62.42	8.	86	62.17	54.05	131	61.54	99.20	176	60 64	144 51
41	62 42	9.	87	62.16	55.05	132	61.52	100.20	177	60.62	145.52
42	62.42	10.	88	62.15	56.05	133	61.51	101.21	178	60.59	146.52
43	62.42	11.	89	62.14	57.05	134	61.49	102.21	179	60 57	147 53
44	62.42	12.	90	62.13	58.06	135	61.47	103.22	180	60 55	148 54
45	62.42	13.	91	62.12	59.06	136	61.45	104 22	181	60 53	149 55
46	62.42	14.	92	62.11	60.06	137	61.43	105.23	182	60 50	150.56
47	62.42	15.	93	62.10	61.06	138	61.41	106.23	183	60.48	151 57
48	62.41	16.	94	62.09	62.06	139	61.39	107.24	184	60.46	152 58
49	62.41	17.	95	62.08	63.07	140	61 37	108.25	185	60 44	153 59
50	62.41	18.	96	62.07	64.07	141	61.36	109 25	186	60 41	154 60
51	62.41	19.	97	62.06	65 07	142	61 34	110.26	187	60.39	155. 61
52	62.40	20.	98	62 05	66.07	143	61.32	111.26	188	60 37	156 62
53	62.40	21.01	99	62.03	67 08	144	61.30	112.27	189	60.34	157.63
54	62.40	22.01	100	62.02	68.08	145	61.28	113.28	190	60 32	158.64
55	62.39	23.01	101	62.01	69.08	146	61 26	114.28	191	60 29	159.65
56	62.39	24.01	102	62.00	70 09	147	61.24	115 29	192	60.27	160 67
57	62.39	25.01	103	61 99	71.09	148	61.22	116 29	193	60.25	161 68
58	62.38	26.01	104	61.97	72.09	149	61.20	117 30	194	60.22	162 69
59	62.38	27.01	105	61.96	73.10	150	61.18	118 31	195	60 20	163 70
60	62.37	28.01	106	61.95	74.10	151	61.16	119 31	196	60 17	164 71
61	62.37	29.01	107	61.93	75.10	152	61 14	120 32	197	60 15	165.72
62	62.36	30.01	108	61 92	76.10	153	61 12	121 33	198	60 12	166 73
63	62 36	31 01	109	61.91	77.11	154	61 10	122.33	199	60 10	167 74
64	62.35	32.01	110	61.89	78.11	155	61 08	123.34	200	60 07	168.75
65	62.34	33 01	111	61.88	79 11	156	61 04	124.35	201	60 05	169 77
66	62.34	34.02	112	61.86	80.12	157	61 02	125.35	202	60 02	170 78
67	62.33	35 02	113	61 85	81 12	158	61 00	126 36	203	60.00	171 79
68	62.33	36 02	114	61.83	82.13	159	60 98	127 37	204	59 97	172 80
69	62.32	37 02	115	61 82	83 13	160	60 96	128 37	205	59 95	173 81
70	62.31	38 02	116	61 80	84 13	161	60 94	129 38	206	59 92	174 83
71	62.31	39 02	117	61.78	85 14	162	60 92	130 39	207	59 89	175 84
72	62.30	40 02	118	61 77	86 14	163	60 90	131 40	208	59 87	176 85
73	62 29	41.02	119	61 75	87.15	164	60 88	132.40	209	59 84	177 86
74	62 28	42 03	120	61 74	88 15	165	60 87	133 41	210	59 82	178 87
75	62.28	43.03	121	61.72	89 15	166	60 85	134 42	211	59 79	179 89
76	62.27	44 03	122	61 70	90 16	167	60 83	135 43	212	59 76	180 90
77	62.26	45.03									

WEIGHT OF WATER AT TEMPERATURES ABOVE 212° F.

Porter (Richards' "Steam-engine Indicator") [illegible] upon a known absolute expansion of water above 212° F. Applying [illegible] experiments made at temperatures below 212° F., however, [illegible] above 212° F. may be [illegible], but in the absence of experimental data we are not certain that the formula holds good at higher temperatures.

* Kent's [illegible]

XXII.

HORSE-POWER PER POUND MEAN PRESSURE.

Diameter of Cylinder. Inches	Speed of Piston in Feet per Minute.										
	100	240	300	350	400	450	500	550	600	650	750
4	.038	.091	.114	.133	.152	.171	.19	.209	.228	.247	.285
4½	.048	.115	.144	.168	.192	.216	.24	.264	.288	.312	.360
5	.06	.144	.18	.21	.24	.27	.30	.33	.36	.39	.450
5½	.072	.173	.216	.252	.288	.324	.36	.396	.432	.468	.540
6	.086	.205	.256	.299	.342	.385	.428	.471	.513	.555	.641
6½	.102	.245	.307	.391	.409	.464	.512	.563	.614	.698	.800
7	.116	.279	.348	.408	.466	.524	.583	.641	.699	.756	.874
7½	.134	.321	.401	.468	.534	.602	.669	.735	.802	.869	1.002
8	.152	.365	.456	.532	.608	.685	.761	.837	.912	.989	1 122
8½	.172	.413	.516	.602	.688	.774	.86	946	1.032	1.118	1.290
9	.192	.462	.577	.674	.770	.866	.963	1.059	1.154	1.251	1 444
9½	.215	.515	.644	.751	.859	.966	1.074	1.181	1.288	1.395	1 610
10	.238	.571	.714	.833	.952	1.071	1.190	1.309	1.428	1.547	1.755
10½	.262	.63	.787	.919	1.050	1.181	1.313	1.444	1.575	1.706	1 969
11	.288	.691	.804	1.008	1.152	1.296	1.44	1.584	1.728	1.872	2 160
11½	.314	.754	.943	1.1	1.257	1.414	1.572	1.729	1.886	2.043	2.357
12	.342	.820	1.025	1.195	1.366	1.540	1.708	1.880	2 050	2.222	2 564
13	.402	.964	1.206	1.407	1.608	1.809	2.01	2.211	2.412	2.613	3.015
14	.466	1.119	1.398	1.631	1.864	2.097	2.331	2.564	2.797	3.029	3 495
15	.535	1.285	1.606	1.873	2.131	2.409	2.677	2.945	3.212	3.479	4 004
16	.609	1.461	1.827	2.131	2.436	2.741	3.045	3.349	3.654	3.958	4 567
17	.685	1.643	2.054	2.396	2.739	3.081	3.424	3.766	4.108	4.450	5 135
18	.771	1.849	2.312	2.697	3.083	3.468	3.854	4.239	4.624	5 009	5 780
19	.859	2.061	2.577	3 006	3.436	3.865	4.295	4.724	5.154	5.583	6 442
20	.952	2.292	2.855	3.331	3.807	4.285	4.759	5 234	5.731	6.180	7 128
21	1.049	2.518	3.148	3.672	4.197	4.722	5.247	5.771	6.296	6.820	7 869
22	1.152	2.764	3.455	4.031	4.607	5.183	5.759	6 334	6.911	7.486	8.638
23	1.259	3.021	3.776	4.405	5.035	5.664	6.294	6.923	7.552	8.181	9.44
24	1.370	3.289	4.111	4.797	5.482	6.167	6.853	7.538	8.223	8.908	10.279
25	1.487	3.564	4.461	5.105	5.948	6.692	7.436	8.179	8 923	9 566	11 053
26	1.609	3.861	4.826	5.630	6.435	7.239	8.044	8.848	9.652	10.456	12.065
27	1.733	4.159	5.199	6.066	6 932	7.799	8.666	9.532	10 399	11.265	12.998
28	1.865	4.477	5.596	6.529	7.462	8.395	9.328	10.261	11.193	12.125	13.991
29	2.002	4.805	6.006	7.007	8 008	9.009	10.01	11.011	12.012	13.013	15 015
30	2.142	5.141	6.426	7.497	8.568	9.639	10.71	11.781	12 852	13.923	16 065
31	2.288	5.486	6.865	8.001	9.144	10.287	11.43	12.573	13.716	14.860	17 145
32	2.436	5.846	7.308	8.526	9.744	10.962	12.18	13.398	14.616	15.834	18 270
33	2 590	6.216	7.770	9.065	10.360	11.655	12.959	14.245	15.54	16.835	19 425
34	2.746	6 59	8.238	9.611	10.984	12.357	13.73	15.103	16.476	17.849	20 595
35	2.914	6.993	8.742	10.199	11.656	13.113	14.57	16.027	17.484	18.941	21 855
36	3.084	7.401	9.252	10.794	12.336	13.878	15.42	16.962	18.504	20.046	23 130
37	3.253	7.810	9.774	11.403	13.032	14.861	16.29	17.919	19 548	21.177	24 419
38	3.436	8.246	10.308	12.026	13.744	15.462	17.18	18.898	20.616	22.334	25 770
39	3.620	8.648	10.86	12.67	14.48	16.29	18.1	19.91	21.62	23.53	27 150
40	3.808	9.139	11.424	13.328	15.232	17.136	19.04	20.944	22.848	24.752	28 560
41	4.002	9.604	12.006	14.007	16.008	18.009	20.00	22.011	24.012	26.013	30 015
42	4.198	10.095	12.594	14.693	16.792	18.901	20.99	23.089	25.188	27.287	31 485
43	4.40	10.56	13.20	15.4	17.6	19.8	22.00	24 2	26.4	28 6	33 00
44	4.606	11.040	13.818	16.121	18.424	20.727	23.03	25.333	27.636	29 939	34 545
45	4.818	11.563	14.454	16.863	19.272	21.681	24.09	26.399	28.908	31.317	36 135
46	5.043	12.080	15.128	17.626	20.144	22.662	25.18	27.698	30.216	32 754	37 770
47	5.250	12.614	15.768	18.396	21.024	23.652	26.28	28.908	31.536	34.164	39 420
48	5.482	12.846	16.446	19.187	21.928	24.669	27.41	30.151	32 152	35.633	41 115
49	5.714	12.913	17.142	19 999	22.856	25.713	28.57	31.427	34.284	37 141	42 855
50	5.950	14.28	17.85	20.825	23.8	26.775	29.75	32.725	35.7	38.675	44 625
51	6 189	14.832	18.54	21.665	24.76	27.855	30.95	34.045	37.08	40.205	46.425
52	6.432	15.437	19.296	22.512	25.728	28.944	32.16	35.376	38.592	41.808	48 240
53	6.684	16.041	20.052	23.394	26.736	30.078	33.42	36 762	40.104	43.446	50.130
54	6.940	16.656	20.82	24.29	27.76	31.23	34.7	38.17	41.64	45.11	52.05
55	7.198	17.275	21.594	25.193	28.792	32.391	35.99	39.589	43.188	46.787	53.985
56	7.462	17.909	22.386	26.117	29 848	33.579	37 31	41.041	44.772	48.503	55 965
57	7.732	18.557	23.196	27.062	30 928	34 794	38.66	42.526	46.392	50.258	57 99
58	8.000	19 214	24.018	28 021	32.024	36.027	40.03	44.033	48.036	52.039	60 045
59	8.254	19 902	24.852	28.964	33.136	37.278	41.42	45.562	48.704	53.846	62.13
60	8.506	20.558	25.698	29.981	34 264	38.547	42.83	47.113	51.396	55.679	64.28

XXIII.

(Page 560.)

THEORETICAL WATER-COMPUTATION TABLE FOR STEAM-ENGINES.

T. P.	0	1	2	3	4	5	6	7	8	9
3	117.300	121.015	124.717	128.406	132.083	135.748	139.399	143.075	146.665	150.279
4	153.880	157.514	161.137	164.750	168.353	171.945	175.527	179.098	182.659	186.210
5	189.750	193.336	196.914	200.483	204.044	207.598	211.142	214.679	218.208	221.728
6	225.240	228.799	232.351	235.897	239.437	242.970	246.497	250.017	253.531	257.039
7	260.540	264.056	267.566	271.071	274.570	278.063	281.550	285.031	288.506	291.976
8	295.440	298.922	302.400	305.872	309.338	312.800	316.256	319.708	323.154	326.594
9	330.030	333.488	336.941	340.389	343.833	347.273	350.707	354.137	357.563	360.984
10	364.400	367.842	371.280	374.714	378.144	381.570	384.992	388.410	391.824	395.234
11	398.640	402.064	405.485	408.902	412.315	415.725	419.131	422.534	425.933	429.328
12	432.720	436 120	439.517	442.911	446.301	449.688	453.071	456.451	459.828	463.200
13	466 570	469.950	473.326	476.699	480.068	483.435	486.798	490 159	493.516	496.869
14	500.220	503.596	506.968	510.338	513.706	517.070	520 432	523.790	527.146	530.500
15	533.850	537.213	540.573	543.930	547.285	550.638	553.987	557.334	560.679	564.011
16	567.360	570.713	574.063	577.411	580.757	584.100	587.441	590.780	594.115	597.449
17	600.780	604.109	607.435	610.759	614.081	617.400	620.717	624.031	627.343	630.653
18	633.960	637.265	640.567	643.867	647.165	650.460	653.753	657.043	660.331	663.617
19	666.900	670.200	673.498	676.793	680.086	683.378	686.666	689.953	693.238	696.520
20	699.800	703.098	706 394	709.688	712.980	716.270	719.558	722.844	726.128	729.410
21	732.690	735.968	739.244	742.518	745.790	749.060	752.328	755.594	758.858	762.120
22	765.380	768.660	771.938	775.215	778.490	781.763	785.034	788.303	791.570	794.836
23	798.100	801.362	804.622	807.881	811.138	814.393	817.646	820.897	824.146	827.334
24	830.640	833.908	837.175	840.440	843.703	846.965	850.225	853.484	856.741	859.996
25	863.250	866.502	869.753	873.002	876.249	879.495	882.739	885.982	889.223	892.462
26	895.700	898.936	902.171	905.404	908.635	911.865	915.093	918.320	921.545	924.768
27	927.990	931.210	934.429	937.646	940.831	944.075	947.287	950.498	953.707	956 914
28	960.120	963.352	966.583	969.813	973.041	976.268	979.493	982.717	985.939	989.160
29	992.380	995.598	998.815	1002.031	1005.245	1008.458	1011.669	1014.879	1018.087	1021.294
30	1024.500	1027.704	1030.907	1034.109	1037.309	1040.508	1043.705	1046.901	1050.095	1053.288
31	1056.480	1059.670	1062 859	1066.047	1069.233	1072.418	1075.601	1078.783	1081.963	1085.142

XXIII.—(*Continued.*)

THEORETICAL WATER-COMPUTATION TABLE FOR STEAM-ENGINES.

T. P.	0	1	2	3	4	5	6	7	8	9
32	1088.320	1091.528	1094.736	1097.942	1101.146	1104.350	1107.552	1110.754	1113.954	1117.152
33	1120.350	1123.546	1126.742	1129.936	1133.128	1136.420	1139.510	1142.700	1145.888	1149 074
34	1152.260	1155.444	1158.628	1161.810	1164.990	1168.170	1171.348	1174.526	1177.702	1180.876
35	1184.050	1187.222	1190.394	1193.564	1196.732	1199.900	1203.066	1206.232	1209.396	1212.558
36	1215.720	1218.917	1222.112	1225.307	1228.500	1231.693	1234.884	1238.075	1241.264	1744.453
37	1247.640	1250.827	1254.012	1257.197	1260.380	1263.563	1266.744	1269.925	1273.104	1276.283
38	1279 460	1282.637	1285.812	1288.987	1292.160	1295.333	1298.504	1301.675	1304.844	1308.013
39	1311.180	1314.347	1317.512	1320.677	1323.840	1327.003	1330.164	1333.325	1336.484	1339 643
40	1342.800	1345.957	1349.112	1352.267	1355.420	1358.573	1371.724	1364.875	1368.024	1371.173
41	1374.320	1377.467	1380.612	1383.757	1386.900	1390.043	1393.184	1396.325	1399.464	1402.603
42	1405.740	1408.877	1412.012	1415.147	1418.280	1421.413	1424.544	1427.675	1430.804	1433.933
43	1437.060	1440.230	1443.398	1446.566	1449.734	1452.900	1456.066	1459.230	1462.394	1465.558
44	1468.720	1471.882	1475.042	1478.202	1481.362	1484.520	1487.678	1490.834	1493.990	1497.146
45	1500.300	1503.454	1506.606	1509.758	1512.910	1516.060	1519.210	1522.359	1525.506	1528.654
46	1531.800	1534.946	1538.090	1541.234	1544.378	1547.520	1550.662	1553.802	1556.942	1560.082
47	1563.220	1566.358	1569.494	1572.630	1575.766	1578.900	1582.034	1585.166	1588.298	1591.430
48	1594.560	1597.690	1600.818	1603.946	1607.074	1610.200	1613.326	1616.450	1619.574	1622.698
49	1625.820	1628.942	1632.062	1635.182	1638.302	1641.420	1644.538	1647.654	1650.770	1653.886
50	1657.000	1660.114	1663.226	1666.338	1669.450	1672.560	1675.670	1678.778	1681.886	1684.994
51	1688.100	1691.206	1694.310	1697.414	1700.518	1703.620	1706.722	1709.822	1712.922	1716.022
52	1719.120	1722.218	1725.314	1728.410	1731.506	1734.600	1737.604	1740.786	1743.878	1746.970
53	1750.060	1753.150	1756.238	1759.327	1762.414	1765.500	1768.586	1771.670	1774.754	1777.838
54	1780.920	1784.002	1787.082	1790.162	1793.242	1796.320	1799.398	1802.474	1805.550	1808.626
55	1811.700	1814.829	1817.957	1821.084	1824.211	1827.338	1830.463	1833.588	1836.713	1839.837
56	1842.960	1846.083	1849.205	1852.326	1855.447	1858.568	1861.687	1864.806	1867.925	1871.043
57	1874.160	1877.277	1880.393	1883.508	1886.623	1889.738	1892.851	1895.964	1899.077	1902.189
58	1905.300	1908.411	1911.521	1914 630	1917.739	1920.848	1923.955	1927.062	1930.169	1933.275
59	1936.380	1939.485	1942.589	1945.692	1948.795	1951.898	1954.999	1958.100	1961.201	1964.301
60	1967.400	1970.499	1973 597	1976.694	1979.791	1982.888	1985.983	1989.078	1992.173	1995.267

The following tables give coefficient of discharge as collated from Hamilton Smith's experiments by Professor Merriman.

XXIV.

WEIRS WITH PERFECT END CONTRACTION.

Effective Head in Feet.	Length of Weir in Feet.						
	0.66	**1**	**2**	**3**	**5**	**10**	**19**
0.1	0.632	0.639	0.646	0.652	0.653	0.655	0.656
0.15	.629	.625	.634	.638	.640	.641	.642
0.2	.611	.618	.626	.630	.631	.633	.634
0.25	.605	.612	.621	.624	.626	.628	.629
0.3	.601	.608	.616	.619	.621	.624	.625
0.4	.595	.601	.609	.613	.615	.618	.620
0.5	.590	.596	.605	.608	.611	.615	.617
0.6	.587	.593	.601	.605	.608	.613	.615
0.7		.590	.598	.603	.606	.612	.614
0.8			.595	.600	.604	.611	.613
0.9			.592	.598	.603	.609	.612
1.0			.590	.595	.601	.608	.611
1.2			.585	.591	.597	.605	.610
1.4			.580	.587	.594	.602	.609
1.6				.582	.591	.600	.607

* See p. 974.

XXV.

WEIRS WITHOUT END CONTRACTION.

Effective Head in Feet.	Length of Weir in Feet.						
	2	**3**	**4**	**5**	**7**	**10**	**19**
0.1				0.659	0.658	0.658	0.657
0.15	0.652	0.649	0.647	.645	.645	.644	.643
0.2	.645	.642	.641	.638	.637	.637	.635
0.25	.641	.638	.636	.634	.633	.632	.630
0 3	.639	.636	.633	.631	.629	.628	.626
0.4	.636	.633	.630	.628	.625	.623	.621
0.5	.637	.633	.630	.627	.624	.621	.619
0.6	.638	.634	.630	.627	.623	.620	.618
0.7	.640	.635	.631	.628	624	.620	.618
0.8	.643	.637	.633	.629	.625	.621	.618
0.9	.645	.639	.635	.631	.627	.622	.619
1.0	.648	.641	.637	.633	.628	.624	.619
1.2		.646	.641	.636	.638	.626	.620
1.4			.644	.640	.634	.629	.622
1.6			.647	.642	.637	.631	.623

XXVI.

HORSE-POWER LINE-SHAFTING WILL TRANSMIT WITH SAFETY

BEARINGS, 8 TO 10 FT. CENTRES.

Diameter of Shaft in Inches.	Horse-power in one Revolution.	Diameter of Shaft in Inches.	Horse-power in one Revolution.	Diameter of Shaft in Inches.	Horse-power in one Revolution.
$\frac{15}{16}$	.008	$2\frac{15}{16}$	.216	$5\frac{15}{16}$	.728
$1\frac{3}{16}$	.0156	$3\frac{3}{16}$	.272	$6\frac{7}{16}$	2.195
$1\frac{7}{16}$	.027	$3\frac{7}{16}$	.343	$6\frac{15}{16}$	2.744
$1\frac{11}{16}$	.043	$3\frac{11}{16}$	.424	$7\frac{3}{16}$	3.368
$1\frac{15}{16}$	.064	$3\frac{15}{16}$	.512	$7\frac{15}{16}$	4.096
$2\frac{3}{16}$	.091	$4\frac{7}{16}$	.728	$8\frac{7}{16}$	4.912
$2\frac{7}{16}$	.125	$4\frac{15}{16}$	1.00	$8\frac{15}{16}$	5.824
$2\frac{11}{16}$	.166	$5\frac{7}{16}$	1.328	$9\frac{7}{16}$	6.848

For jack-shafts, or main section of line-shafts, allow only three-fourths of the horse-power given above, and also provide extra bearings wherever heavy strains occur, as in main belts or gears.

XXVII.

HORSE-POWER BELTING WILL TRANSMIT WITH SAFETY.

Width of Belt in Inches.	Horse-power per 100 Feet. Velocity of Belt.		Width of Belt in Inches.	Horse power per 100 Feet. Velocity of Belt.	
	Single Belt.	Double Belt.		Single Belt.	Double Belt.
1	.09	.18	12	1.09	2.18
2	.18	.36	14	1.27	2.55
3	.27	.55	16	1.45	2.91
4	.36	.73	18	1.64	3.27
5	.45	.91	20	1.82	3.64
6	.55	1.09	22	2.00	4.00
7	.64	1.27	24	2.18	4.36
8	.73	1.46	28	2.55	5.09
9	.82	1.64	32	2.91	5.82
10	.91	1.82	36	3.27	6.55
11	1.00	2.00	40	3.64	7.27

In the calculations for horse-power in the above table, the belt is assumed to run about horizontally; the semi-circumference of smaller pulley has been considered as the ordinary arc-contact of belt. Any reduction of this contact will make approximate proportional reduction of horse-power.

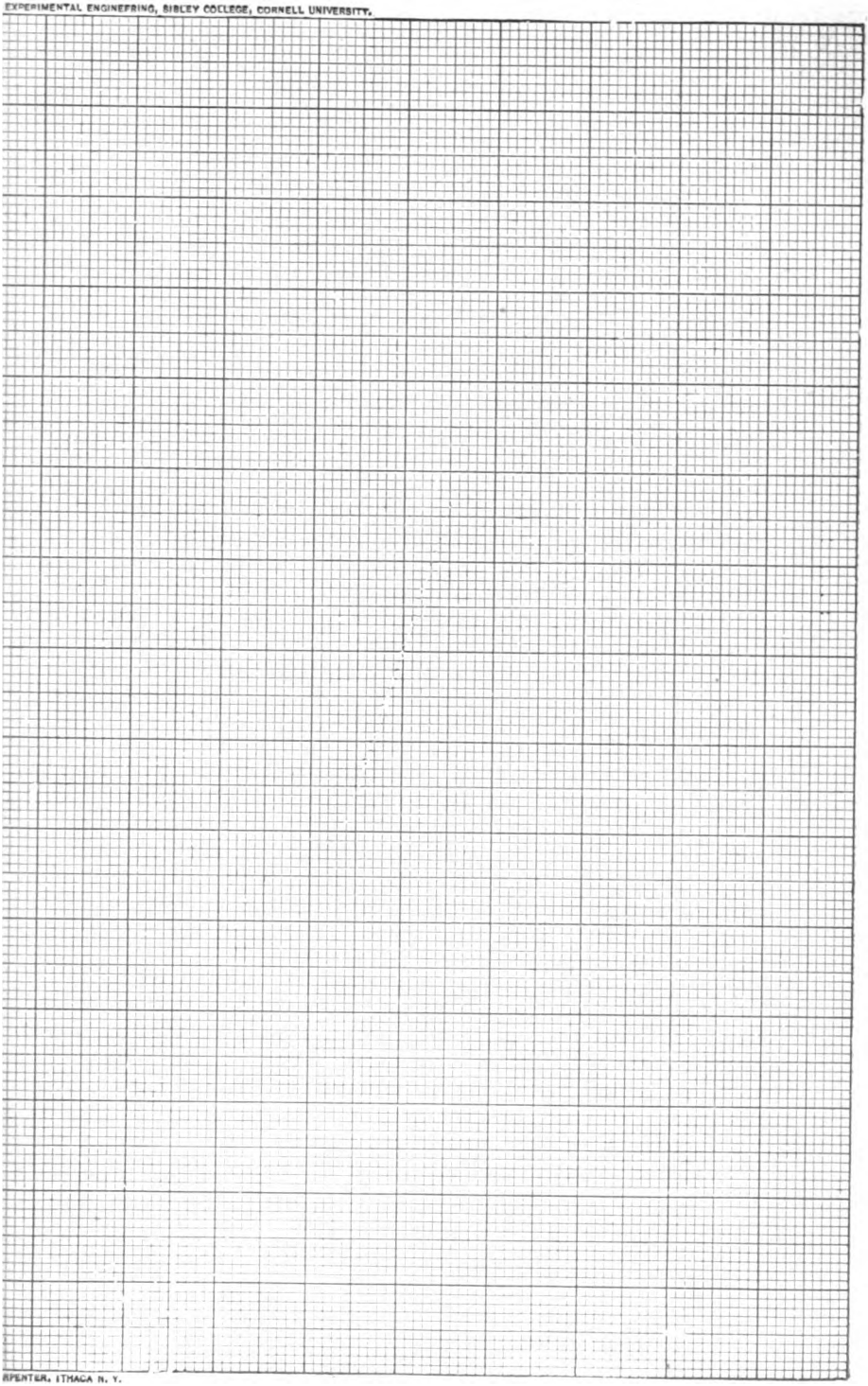

INDEX.

A

PAGE

Abrasion Test 186
" " Paving-brick 180
Absolute Pressure 336
" Zero 338
Absorber in Refrigeration 747
Absorption Dynamometer 235
" Test of Bricks 179
Accelerated Cement Test 190
Accidental Errors 18
Accuracy of Numerical Calculations 19
Acidity Tests for Oil 215
Adiabatic Compression, Loss of Work by 729
" Curve fer Gases 712
" " for Steam, Formula for 556
" Curves for Ammonia 745
" Definition 342
" Expansion of Gases 711
" " " Steam, Formula 554
Admiralty Tests 172
Admission-line Diagrams 564
Air, Coefficients of Discharge 298
" Formulæ for Adiabatic and Isothemal expansion 711
" " " Flow of in Pipes 711
" Measurement of Velocity 306
" Velocity of Flow 297
" " of, Measured by Heating 726
" Volume Discharged 296
" Weight " 298

PAGE

Air-compressor, Clearance Space..... 723
" Data and Results, Tests of..... 730
" Formulæ for Compression..... 711
" Types of..... 720
Air-pyrometer..... 381
Air Refrigerating-machine..... 741
Air-thermometer..... 371
" Construction..... 376
" Corrections..... 377
" Directions for..... 378
" Form of..... 379
" Formula for..... 374
" Uses of..... 377
Alcohol Thermometer..... 371
Alden Brake..... 241
Allen's Draft-gauge..... 351
Ammonia Absorption System..... 748
" " " Illustrated..... 750
" Adiabatic Curves for..... 745
" Anhydrous Properties of..... 740
" Compression Cylinder..... 744
" " Relation of Pressure and Volume.....711, 744
" Gauge..... 358
" Refrigerating-machine..... 742
" Refrigeration Data and Result Sheets..... 749
Amsler's Planimeter..... 30
Analysis of Flue-gas..... 474
" Proximate, Coal and Coke..... 470
Analyzer in Refrigeration..... 747
Anemometer Calibration..... 307
" Described..... 306
" for Measuring Air..... 725
Angles, Functions of, Table..... 771
" Table of Natural Functions..... 777
Anhydrous Ammonia, Properties of..... 738
Approximate Calculation, Formulas..... 16
Artificial Building Stone, Test of..... 178
Ash Analysis, Table..... 787
Ash, Determination of..... 470
Ashcroft's Oil-testing Machine..... 227
Asphalt, Tests of..... 180
Aspirator for Flue-gas..... 478

PAGE
Atmospheric Line. 548
" Pressure. 336
Atomic Weight Definition. 443
Autographic Apparatus, Olsen. 111
" Diagrams. 21
" Extensometer. 133
" Torsion Machine. 114

B

Bachelder Dynamometer. 255
" Indicator. 523
Back-pressure Line. 549
Barnett Gas-engine. 702
Barrel Calorimeter. 402
" " Directions. 405
Barrus Continuous Calorimeter. 410
" Superheating Calorimeter. 398, 416
Bauschinger's Extensometer. 125
Beau de Rochas Cycle. 702
Beaumé's Hydrometer Scale, Table of. 786
Belt Test, Directions. 266
" " Forms. 268
" Testing Machine. 264
" Dynamometer. 263
" Friction. 199
" Testing Methods. 263
Belting, Table of H.P. 304
Bending Moment. 76
" Test. 166
Bernouilli's Formula. 276
Berthelot's Fuel-calorimeter. 457
Berthier's Fuel-calorimeter. 456
Blowers, Types of. 723
Boiler Efficiency. 493
" Horse-power. 494
" Leakage Locomotive Test. 648
" Test, Abbreviated Directions. 514
" " " Form. 513
" " Analysis of Coal. 504
" " Analysis of Flue-gas. 504
" " Calculations of Efficiency. 505

PAGE
Boiler Test, Calibration of Apparatus 497
" " Correction for Leakage 498
" " Definitions 493
" " Duration 499
" " for Locomotives 639
" " Forms for Data and Results 507
" " Fuel 496
" " " Value 472
" " Graphical Log 495
" " Heat Balance 506
" " Measurements 496
" " Object 492
" " Pumping-engines 618
" " Quality of Steam 501
" " Records 501
" " Sampling of Coal 502
" " Smoke Observations 506
" " Standard Method 495
" " Starting and Stopping 499
" " Uniformity of Operations 500
Boiling-point, Table 423
" Test for 380
" Test for Cement 190
Bomb Fuel-calorimeter 457
Boston Extensometer 132
Boult's Oil-testing Machine 227
" " " Directions 230
Bourdon Gauge 357
Boyer Speed-recorder 650
Brake, Alden 241
" Constants 244
" Designing 236
" Different Forms 239
" Directions for Use 243
" Fan Form 245
" Horse-power 239
" Hydraulic 242
" Prony 235
" Pump Form 245
" Self-regulating 241
" Strap Stresses 235
" Transfer of Heat 243

PAGE
Breast Water-wheels. . . . 313
Brick, Abrasion Test. . . . 180
" Test of. . . . 178
Bridge Material, Specifications. . . . 169
" " Tests. . . . 168
Brine, Specific Heat of 752
Briquettes, Form of. . . . 141
Brown Speed-indicator. . . . 573
Brumbo Pulley. . . . 531
Burning-point Test for Oils. . . . 212
Buzby Extensometer. . . . 127

C

Calibration of Anemometer. . . . 307
" " Apparatus for Engine Test. . . . 578
" " Differential Dynamometer 256
" " Drum Spring. . . . 542
" Forms for Gauges. . . . 368
" of Gauges. . . . 363
" " Gauges with Mercury Column. . . . 366
" " Indicator Spring. . . . 555
" " Morin Dynamometer. . . . 240
" " Planimeter. . . . 52
" " Tachometer. . . . 201
" " Testing-machine. . . . 97
" " Venturi Tube 287
" " Weir. . . . 285
Caliper, Micrometer 59
" Sweet. . . . 60
" Vernier. . . . 57
Calorie. . . . 339
Calorific Power of Fuels. . . . 444
Calorimeter, Barrel. . . . 402
" Barrus Continuous. . . . 410
" " Superheating. . . . 416
" Chemical. . . . 445
" Collecting-nipples. . . . 399
" Comparative Value. . . . 441
" Condensing. . . . 395
" Continuous-jet Condensing. . . . 425
" Diagram for Results from Temperatures. . . . 428

PAGE
Calorimeter, Diagram for Throttling. . . . 425
" Effect of Errors. . . . 396
" Electric. . . . 418
" Fuel, Bomb. . . . 457
" " Heat Equivalent. . . . 452
" " Mahler's. . . . 461
" " Thompson. . . . 455
" Hoadley. . . . 407
" Injector. . . . 406
" Limits of Throttling. . . . 427
" for Locomotive Tests. . . . 653
" Measure of Water Equivalent. . . . 401
" Method of Sampling Steam. . . . 399
" Principles of Fuel. . . . 451
" Separating. . . . 430
" " Formula for Use. . . . 436
" Superheating. . . . 398
" Table of Errors. . . . 397
" Throttling. . . . 418
" " Diagram for using. . . . 796
" " Formula. . . . 398
" " Table for using. . . . 795
" Thomas Electric. . . . 418
Calorimetric Method of Engine Testing. . . . 590
" Pyrometer. . . . 381
Capacity of Pumps, Definition. . . . 329
" " " How Computed. . . . 628
Carbon, Determination of. . . . 470
" Dioxide Absorbents. . . . 475
" Monoxide Absorbents. . . . 476
Carbonic Acid Absorbents. . . . 475
Carburetter. . . . 709
Car-wheel Tests. . . . 167
Carnot Cycle for Gas-engines. . . . 714
Carpenter Calorimeter for Steam. . . . 422
" Draft-gauge. . . . 351
" Fuel-calorimeter. . . . 463
" Separating-calorimeter. . . . 435
Cast-iron Tensile-test Piece. . . . 139
Cathetometer. . . . 62
Cement, Definitions. . . . 181
" Fineness Test. . . . 184

PAGE
Cement Moulds. . . . 141
" Natural, Definition. . . . 191
" Normal Consistency Test. . . . 185
" Portland, Definition. . . . 191
" Sieves. . . . 184
" Specific Gravity Test. . . . 183
" Specifications. . . . 190
" Tensile Strength Required. . . . 192
" Test, Mixing. . . . 187
" " Piece. . . . 140
" Tests, Forms for. . . . 194
" Testing. . . . 182
" " Tensile. . . . 189
" " Machine. . . . 119
" " " Fairbanks. . . . 120
" " " Olsen. . . . 121
" " " Riehlé. . . . 122
Centrifugal Blower, Data and Results. . . . 732
" " Theory of. . . . 729
" Fans, Types of. . . . 724
" Pumps, Test of. . . . 331
Chain-test Piece 139
Chemical Calorimeter. . . . 440
" Equivalents, Table. . . . 444
Chill-point Test of Oil. . . . 214
Chloride of Calcium, Specific Heat. . . . 752
Chromous Chloride. . . . 475
Chronograph. . . . 573
" Record. . . . 576
Chronometer for Locomotive Testing. . . . 650
Cistern Manometer. . . . 347
Classification of Calorimeters. . . . 391
Clay-ball Pyrometer. . . . 389
Clearance, how measured. . . . 583
" from Indicator Diagram. . . . 560
" in Compressor, Effect of. . . . 728
" Line. . . . 548
Coal and Coke, Proximate Analysis. . . . 470
" Calorific Tests. . . . 504
" Method of Determining Moisture. . . . 502
" Sampling. . . . 502
" Test, Form of Report for Locomotives. . . . 644

PAGE
Coal Test on Locomotives. . . . 642
Coefficient of Discharge. . . . 271
" " Friction. . . . 196
Coffin Planimeter. . . . 41
Cold Tests for Oil. . . . 213
Column Testing, Directions. . . . 154
Combined Diagram, Method of Drawing. . . . 566
" Inertia and Indicator Diagrams. . . . 668
Combustible, Definition. . . . 493
Combustion, Definition. . . . 443
" Heat of, Table. . . . 446
" Method of Determining when Perfect. . . . 452
" Products, Object of Analysis. . . . 473
" Temperature, How Determined. . . . 448
Composition of Fuels, Table. . . . 451
Compound Engine Diagrams. . . . 565
" " Hirn's Analysis. . . . 604
" Pumping-engine Test Examples. . . . 631
Compressible Fluids, Flow of. . . . 295
Compression, Effect of Clearance. . . . 728
" Formula. . . . 74
" of Gases, Formula for. . . . 711
" Test, Directions. . . . 154
" " Pieces. . . . 142
" " Results. . . . 155
Compressor, Ammonia. . . . 742
" for Air, Test of. . . . 750
" Types of. . . . 720
Computation Machine. . . . 64
Condensation in Cylinder. . . . 561
Condenser for Steam, Surface. . . . 576
" Test. . . . 578
Condensing Calorimeters. . . . 395
Consistency, Normal, Test of. . . . 185
Constancy of Volume, Definition. . . . 189
" " " Test. . . . 192
Constant Head Viscosometer. . . . 207
Contraction, Coefficient for. . . . 271
Cornell University Experimental Engine. . . . 657
Corradi Roller Planimeter. . . . 45
Counter of Speed. . . . 572
Crosby Gauge-testing Apparatus. . . . 363

PAGE
Crosby Indicator 521
Cross-section Paper 20
Curtis Steam-turbine 690
Curve, Adiabatic, Formula for Steam 556
" Isothermal, Formula for 557
" of Expansion Steam 556
" " Saturation, Formula for 555
Cycle, Four-stroke 702
" Two-stroke 702
" of Gas-engine 713
" " Refrigerating Machine 734
Cylinder Condensation 561
" " Loss by Diagram 563

D

Definitions, Friction Tests 196
" Steam-engine Terms 569
Deflectometer 135
Degree of Superheat 390
" " " Formula for 393
DeLaval Steam-turbine, Description of 687
Density of Steam 342
" Test, Oil 202
Diagram, Autographic 21
" of Experiments 20
" from Indicator, Combined 567
" " Indicators 563
" Inertia 664
" Locomotive Tests 652
" Reduction of 22
" Represents Work 21
" of Shaft Motion 567
" Strain 69, 144
" for Throttling-calorimeter 425
" Thurston's Torsion Machine 115
Diameters and Squares, Table of 756
Diaphragm, Discharge through 280
" Gauge 359
" Loss of Head through 279
Diesel Oil-engine 709
Differential Dynamometer 255
" " Calibration 256

PAGE
Dilution Coefficient. 488
Dimensions, Experimental Engine, Institute of Technology. 605
" " " Sibley College. 657
" of Pipe, Table of. 798
Directions for Belt Test. 266
" Tension Tests. 145
Discharge, Coefficient for. 271
Draft Gauges. 351
Draw-bar Pull of Locomotives. 649
Drop Test, Directions. 164
" Testing Machine. 119
Drum Motion of Indicator. 540
" Spring Calibration. 542
" " Testing Device. 541
Ductility of Specimens. 143
DuLong's Formula. 445
Durability Test Lubricants. 226
Duty, Definition. 328
" How Computed. 628
" Test, Pressure-gauge. 620
" Trial, Pumping-engines. 618
Dynamometer, Absorption. 235
" Alden. 241
" Belt. 263
" Classes of. 235
" Differential. 255
" Emerson's. 259
" Horse-power. 517
" Lewis. 252
" Locomotive Tests. 651
" Pillow Block. 252
" Records, Locomotive Tests. 649
" Steelyard. 250
" Traction. 246
" Transmission. 247
" Van Winkle. 261
" Webber. 255

E

Efficiency, Boiler. 494, 505
" of Ideal Refrigerating Machine. 735
" Mechanical, Definition. 569

PAGE
Efficiency of Perfect Engine. . . . 570
" " Plant. . . . 570
" " Refrigerating Machine. . . . 736
" Test of Pumps. . . . 330
" " Steam-engines. . . . 589
" " 3
" Thermodynamic, Definition. . . . 570
Elastic Curve. . . . 159
Elasticity. . . . 68
" Modulus. . . . 73
" and Rigidity Modulus, Relation of. . . . 83
Elbows, Loss of Head. . . . 277
Electric Ignition. . . . 704
" Pyrometer. . . . 385
Elliott's Flue-gas Apparatus. . . . 479
Elongation, in Test Piece. . . . 68
" Measure of. . . . 134
Emerson's Power Scale. . . . 259
Emery Scale Beam. . . . 106
" Testing Machine. . . . 94, 96
" Vertical Machine. . . . 102
" Weighing System. . . . 106
Empirical Formula, How Deduced. . . . 10
Engine Fitting for Testing. . . . 582
" Hot-air. . . . 694
" Inertia of Parts. . . . 660
" Locomotive Test. . . . 652
" Method of Measuring. . . . 583
" Methods of Testing. . . . 581
" Water Pressure. . . . 309
" Test, Calibration of Apparatus. . . . 578
" " Directions. . . . 585
" " Form for Results. . . . 584
" " Indicator Practice. . . . 584
" " for Leaks. . . . 582
" " Measurement of Speed. . . . 571
" " Object. . . . 570
" " Quality of Steam. . . . 581
" " Weighing Steam. . . . 581
Entropy, Definition. . . . 343
" Table of. . . . 794
Ericsson Hot-air Engine. . . . 694

PAGE
Ericsson Hot-air Engine, Method of Operating. 700
Errors, Classification of. 5
" Combination of. 9
" Probability of. 6
" When to Neglect. 18
Euler's Formula. 75
Evaporation, Table of Factors. 797
Expansion Curve, Method of Drawing. 554
" Fuel Calorimeter. 463
" of Gases, Formula for. 711
" Ratio of. 550
Experiment *vs.* Theory. 2
Experimental Engine Dimensions, Institute of Technology. 605
" " Sibley College, Dimensions of. 657
" " Use of. 656
Experiments, Classification. 3
" Objects of. 1
Extensometer, Autographic. 133
" Bauschinger's. 125
" Boston. 132
" Buzby. 127
" Henning. 129
" How to Apply. 148
" Johnson's. 129
" Marshall. 131
" Paine. 127
" Riehlé. 128
" Roller and Mirror. 125
" Strohmeyer's. 126
" Thurston. 129
" Unwin's. 126
" Wedge. 124
Eye-bars, Specifications of. 171

F

Factor of Safety. 69
" " Evaporation, Definition. 493
Factors of " Table. 797
Fairbanks Cement Machine. 120
" Testing Machine. 92
Fan Brake. 245
Fan, Data and Results. 732

PAGE
Fan, Theory of. . . . 729
Fans, Types of. . . . 724
Fatigue of Metals. . . . 166
Favre & Silbermann Fuel Calorimeter. . . . 453
Feed-water Measurement. . . . 616
" Temperature, Determinations of. . . . 615
Fineness of Cement. . . . 192
" " " Test. . . . 184
Flash Test of Oils. . . . 210
Floats. . . . 282
" Use of. . . . 289
Flow of Air. . . . 296
" " " in Pipes. . . . 299
" " Compressible Fluids. . . . 295
" " Gas. . . . 302
" " Steam through Orifice. . . . 300
" " Water in Pipes. . . . 288
" " " Measurement of. . . . 281
Flue-gas Analysis, Computations from. . . . 486
" " Forms and Computations. . . . 490
" " Methods. . . . 474
" " Object of. . . . 473
" " Process of. . . . 476
" " Reagents. . . . 475
" Aspirator. . . . 478
" Sampling of. . . . 477
Flue-gases, Analysis of. . . . 504
Flue Losses from Flue-gas Analysis. . . . 488
Fluid Friction. . . . 200
Forging Test. . . . 166
Form for Data and Results Steam Injector. . . . 681
" " Record, Locomotive Tests. . . . 646
" " Report of Test, Steam-turbine. . . . 693
" " Report, Pumping Test. . . . 624
" " Results of Engine Test. . . . 584
" " Tension Test. . . . 151
" " Test of Pulsometer. . . . 684
Forms for Air Thermometer. . . . 379
" " Belt Test. . . . 268
" " Calibration of Gauges. . . . 368
" " Calorimeter. . . . 414
" " Cement Test. . . . 194

PAGE
Forms for Hirn's Analysis 598
" " Oil Test 233
" " Pump Tests 332
" " Separating Calorimeters 439
" " Test, Hot-air Engine 698
" " Testing Hydraulic Motors 326
" " Throttling-calorimeter 430
Formula, Air Thermometer 374
" Bernouilli 276
" for Approximate Calculation 15
" " Compression 74
" Empirical, Deduction of 10
" " Friction 198
" " Pressure, Volume and Temperature, Relations of Gases 711
Formulæ for Hirn's Analysis 591
Freezing Machine, Cycle 734
" Point of oil, Test for 380
Friction, Classification 197
" Coefficient of 196
" Formula 197
" Lubricated Surfaces 201
" of Belts 199
" " Fluids 200
" " Gears 199
" " Journals 198
" " Pivots 198
" Table of Coefficients 784
" Test of Engine 589
" Tests, Definitions 196
Frost Test for Stones 176
Fuel Calorimeter, Bomb 457
" Calorimeters, Principle of 451
" Consumption, Definition 569
" Measurements, Locomotive Testing 641
" Method of Sampling 452
" Test, Locomotive 635
" Value by Boiler Trial 472
" Weight of, Engine-testing 582
Fuels, Composition of 451
" Table of Composition 787
Fulcrums for Emery Machine 95
Fuller's Slide Rule 28

PAGE
Furnace Efficiency from Flue-gas Analysis. 489
" Maximum Temperature from Flue-gas Analysis. 488

G

Gas Analysis Apparatus. 479
" Composition of, Table 703
" Measurement of Flow. 302
Gas-engine, Classification. 700
" Compression Type. 702
" Cycles. 713
" Diagram. 716
" Four-cycle. 706
" Ignition. 703
" Indicator 524
" Optical Indicator. 525
" Report of Test. 716
" Theory. 711
" Two-cycle. 707
Gas Measurement, Dry Meter. 305
" " Wet Meter. 303
" Meter, Testing Device 303
Gasoline Engines. 708
Gas- or Oil-engine Testing. 714
Gauge, Apparatus for Testing. 363
" Calibration by Mercury Column. 366
" Correction of. 367
" Makers, list of 361
" Marking Device. 113
" Tension Test. 147
Gauges, Recording 613
" for Steam-pressures. 357
Gear-teeth Friction. 199
Gibbs's Viscosometer. 205
Giffard Injector. 670
Graphical Log of Boiler Test. 495
" Multiplication 64
" Representation of Data 20
Gumming or Drying Test. 210

H

Hammer Test. 166
Hancock Inspirator. 672

PAGE
Hardening Test. . . . 166
Head, Lost by Contraction. . . . 279
" " at Elbows. . . . 279
" " " Entrance of Pipe. . . . 278
" " in Perforated Diaphragm. . . . 279
" " " Pipes, Measurement of. . . . 289
" " by Valves. . . . 279
" Producing Velocity. . . . 271
" Relation to Pressure. . . . 324
" of Water, Measurement of. . . . 281
Heat Application to Isothermal Expansion. . . . 713
" Balance. . . . 494
" " in Boiler-testing. . . . 506
" of Combustion. . . . 444
" Consumption, Ideal Engine. . . . 569
" Equivalent of Fuel Calorimeter. . . . 452
" Interchanges from Saturation Curve. . . . 612
" Losses in Refrigerating Machine. . . . 738
" Mechanical Equivalent of. . . . 339
" Specific, definition. . . . 338
" " of Brine. . . . 752
" and Temperature. . . . 337
" Transfers of Refrigerating Machine. . . . 735
" Units, definition. . . . 339
" " per Horse-power. . . . 569
Heating Value Measured by Oxygen. . . . 446
Heisler Calorimeter. . . . 421
Hempel's Flue-gas Apparatus. . . . 483
" Fuel Calorimeter. . . . 456
Henning Extensometer. . . . 129
Hennings's Mirror Extensometer. . . . 130
Higgins's Draft-gauge. . . . 353
Hirn's Analysis. . . . 590
" " for Compound Engine. . . . 603
" " Directions for. . . . 595
" " Forms for. . . . 598
" " Institute of Technology Engine. . . . 605
" " for Non-condensing Engine. . . . 603
" " by Saturation Curve. . . . 611
" " for Triple-expansion Engine. . . . 604
Hoadley Air-thermometer. . . . 372
" Calorimeter. . . . 407

PAGE
Hoadley's Calorimetric Pyrometer 384
" Draft Gauge 353
Hook Gauge 282
Hornsby-Akroyd Oil-engine 711
Horse-power, Boiler 494
" Brake 239
" Formula for 517
" Method of Computing 552
" per Pound M.E.P., Table 800
Hot-air Engines 694
" Engine Forms 698
" " Theory 697
Hot Test for Cement 192
" Tube Ignition 704
Humidity of the Air, Table 785
Hydraulic Engines 309
" Machinery, Classification 308
" Motor, Forms for Testing 326
" Power System, Parts of 309
" Ram 321
" " Directions for Testing 325
" Testing Machine 92
Hydraulics, Flow of Water 270
Hydrometric Pendulum 295
Hyperbola, Method of Drawing 554
Hyperbolic Logarithms, Table of 784

I

Ice-making Plant, Illustrated 746
Ignition, Methods of, in Gas-engines 703
Impact Test, Directions 163
" Testing Machine 119
Impulse Steam-turbine, Description of 687
" Water-wheel 314
Indicated and Dynamometric Power 516
" Horse-power 517
" " Method of Computing 552
Indicator, Applied to Locomotive 636
" Attachment to Cylinder 543
" Attachments, Engine-testing 582
" Care of 545

PAGE
Indicator Cock 543
" Cord 529
" " Attachment of 532
" " Tension on 541
" Diagram 516
" " Clearance, How to Find 561
" " Combined 567
" " Definitions 547
" " General Discussion 562
" " Form for Ideal Case 553
" " Hot-air Engine 699
" " with Loop 552
" " Weight of Steam from 557
" Diagrams, Measurements of 551
" " Method of Taking 544
" Dimensions, Table of 528
" Drum Motion 540
" Early Forms 517
" External Spring 523
" for Gas-engines 524
" Gas-engine, Use of 715
" Gear for Locomotives 638
" for Inertia 661
" Optical 525
" Paper Drum 529
" Parts 526
" Pencil Mechanism 526
" " Movement Test 539
" Practice, Engine Test 584
" Reducing Motions 529
" Spring 527
" " Calibration 535, 579
" Standardization 534
" of Steam-engine, Use of 515
" Tests of Locomotive, Form for 653
Inertia Diagram 664
" Indicator 661
" and Indicator Diagram Combined 668
" Moment, Experiment for 80
" Moments, Table 78
" of Parts of Steam-engine 660
Injector, Directions for Testing 679

PAGE
Injector, General Directions for Use. 679
" Limits of. 676
" Mechanical Theory. 674
" Thermodynamical Theory. 672
Institute of Technology Engine Dimensions. 605
Intercooler. 721
Investigation, Method of. 2
Involution by Diagram. 20
Isothermal, Definition. 342
" Expansion of Gases. 711

J

Johnson's Extensometer. 129
Jolly Air-thermometer. 373
Journal Friction. 198
Jump-spark Ignition. 705

K

Kellogg Testing Machine. 93
Kent Calorimeter. 409
Kent's Draft Gauge. 355
Knife-edge of Testing Machine. 95

L

Latent Heat of Steam. 341
" " Table of. 788
Lazy Tongs. 532
Leakage of Boilers, Locomotive Tests. 648
" Test of Pumps. 622
Leaks, Test for, in Engine. 582
Least Squares. 5
Le Chatelier Specific Gravity Apparatus. 183
Lenoir Gas-engine. 701
Lewis Dynamometer. 252
Lime, definition of. 181
Limits of Throttling-calorimeter. 429
Linde Ice-machine Test. 748
Lloyd's Tests for Steel. 173
Load Variation Diagram. 564
Locomotive Boiler Test. 639
" Coal Tests. 642

PAGE
Locomotive Test, Object. . . . 634
" " Standard Method. . . . 634
" " Water Measurement. . . . 645
" Tests, Form for. . . . 653
" " General Results. . . . 654
" " Speed Recorder. . . . 650
" " Staff for. . . . 652
Logarithm Table, Use of. . . . 64
Logarithms, Common Table of. . . . 769
" Hyperbolic, " " 784
Logarithmic Paper. . . . 23
Lubricants, Durability Test. . . . 226
Lubricant Testing. . . . 201
Lubricated Surfaces, Friction of. . . . 201

M

McNaught's Steam-engine Indicator. . . . 517
Machinery, Hydraulic, Classification. . . . 308
Machines for Computation. . . . 64
Mack Non-lifting Injector. . . . 670
Mahler's Fuel Calorimeter. . . . 461
Maillard Testing Machine. . . . 94
Manographie. . . . 525
Manometer. . . . 345
" Cistern Form. . . . 347
" U-shaped. . . . 345
Marshall Extensometer. . . . 131
Materials, Strength of, Table. . . . 781
Material Tests. . . . 67
Mean Effective Pressure. . . . 550
M.E.P., Table for Equivalent H.P. . . . 800
Mean Error. . . . 7
" Ordinate, Length of. . . . 22
Measurement of Feed-water. . . . 616
Mechanical Efficiency. . . . 569
" " How Computed. . . . 628
" Equivalent of Heat. . . . 339
Mercurial Thermometer. . . . 369
" Weight Thermometer. . . . 370
Mercury Column, Calibration of Gauges. . . . 366
" " Use of. . . . 351

PAGE
Mercury Columns. 349
" " Table of Depression. 350
Metal, Strength of, at Different Temperatures. 782
Metals, Table of Specific Gravity. 783
" Table of Specific Heat. 783
Metallic Pyrometer. 381
Meter, Gas. 303
" Prover. 304
Meters for Water. 283
Method of Taking Indicator Diagrams. 544
Metric Measures, Table of. 754
Micrometer. 50
" Caliper. 59
Mirror Extensometer. 125
Mistakes, Rejection of. 71
Modulus of Elasticity. 73
" " Rigidity. 83
Moisture Absorbed by Air, Table. 785
Moment of Flexure. 76
Moments, External, Table. 79
" of Inertia. 80
" " " Table. 78
Morin Dynamometer. 247
" " Calibration. 249
Morse Thermal Heat Gauge. 386
Mortar. 182
Moscrop Speed-recorder. 577
Moulds for Cement. 141
Multiplying Draft Gauges. 355

N

Naperian Logarithms, Table of. 784
Napier's Formula, Table of Discharge of Steam. 795
Necking of Test Specimen. 143
Needle, Vicat. 186
Noel's Optical Pyrometer. 386
Normal Consistency Test. 185
Nozzle Calibration. 287
" Discharge, DeLaval Turbine. 688
Nozzles, Discharge Through. 275
Numerical Calculations, Accuracy of. 19
" Constants, Table of. 756

O

PAGE

Oil Adulteration 202
" Density 202
" Engines 709
" Test for Acids 215
" " " Burning-point 212
" " " Durability 226
" " " Evaporation 212
" " Flash 210
" " Forms 233
" " for Freezing 213
" " " Gumming 210
" " with Limited Feed 231
" " of Viscosity 204
" Testing 201
" " Machine, Ashcroft's 227
" " " Boult's 227
" " " Directions 222
" " " R.R. 218
" " " Riehlé's 224
" " " Theory 220
" " " Thurston's 217
" " Machines 215
Oleography 214
Olsen Autographic Apparatus 111
" Cement Machine 121
" Testing Machine 92, 110
" Torsion Machine 188*a*
Optical Indicator 525
" Pyrometers 386
Ordinate, Mean 22
Orsat's Flue-gas Apparatus 482
Otto Cycle 702
Otto & Langen Gas-engine 701
Overshot Water-wheels 311
Oxygen Absorbents 475
" Method of Measuring Heating Value 446

P

PAGE
Paine Extensometer. 127
Pantograph. 531
Paper Drum for Indicators. 529
" Logarithmic. 23
Parsons' Steam-turbine. 689
Paving Materials, Test of. 179
Peabody Calorimeter. 419
Péclet's Draft-gauge. 353
Pelton Motor, Test of. 324
" Water-wheel. 315
Pencil Mechanism of Indicator. 526
" Movement on Indicator, Test of. 539
Pendulum Reducing Motion. 530
" Viscosometer. 209
Pennsylvania R.R. Viscosometer. 204
Perfect Engine Efficiency. 570
Perkins Viscosometer. 205
Phœnix Testing-machine. 93
Phosphorus. 475
" Determination of. 470
Pillow-block Dynamometer. 252
Pipe-fitting Calorimeter for Steam. 422
Pipes, Flow Through. 277
Pipe, Table of Standard Dimensions. 798
Piston Air-compressor. 720
" Displacement, how measured. 583
Pitot Tube. 292
" " for High Pressures. 294
" " Use of, for Measuring Air. 726
Pivot Friction. 198
Planimeter Adjustment. 50
" Calibration. 52, 780
" Directions. 51
" Errors. 55
" Measurement of Diagrams. 551
" Roller. 45
" Suspended. 41
Plant Efficiency. 570
Platinum Ball Pyrometer. 385
Polar Planimeter. 30
" " Theory. 32

PAGE
Portland Cement, Definition. . . . 191
" " Specifications. . . . 192
" " Testing. . . . 182
Potassium Pyrogallate. . . . 475
Power-pumps, Tests of. . . . 331
" Systems Testing Machines. . . . 89
Pressure of Atmosphere. . . . 336
" by Gauge. . . . 336
" Measured by Manometer. . . . 347
" Units, Table of. . . . 336
" and Volume, Formulæ for Compression of Gas. . . . 711
" " " Relations of, in Refrigeration. . . . 744
Preston Air-thermometer. . . . 372
Priestman Oil-engine. . . . 710
Probable Error. . . . 7
Probability of Errors. . . . 6
Products of Combustion, Object of Analysis. . . . 473
Prony Brake. . . . 235
" " Designing. . . . 236
" " Directions. . . . 244
" " for Engine-testing. . . . 582
" Brakes, Various Forms. . . . 239
Properties of Steam. . . . 340
Pulsometer, Description of. . . . 683
" Form for Tests. . . . 684
" Theory of. . . . 684
Pump Brake. . . . 245
" Test, Computation and Results. . . . 628
" Forms for. . . . 332
" Form of Report. . . . 624
Pumps, Centrifugal, Test of. . . . 331
" Classification of. . . . 327
" Duty and Capacity of. . . . 328
" Efficiency Test. . . . 330
" Measurement of Work. . . . 329
" Rotary. . . . 328
" Slip of. . . . 330
Pumping-engine, Leakage Test. . . . 622
" Observations. . . . 620
Pumping-engines, Duty Trial 618
Punching Test. . . . 166
Puzzuolana. . . . 182

PAGE
Pyrometer Calibration. 780
" for Locomotive-testing. 641
Pyrometers. 380
" Comparison of. 389

Q

Quality of Steam, Definition. 390
" " " Duty Test. 621
" " " Formula for. 393
" " " Methods of Determining. 394
" " " from Saturation Curve. 610

R

Ram, Hydraulic. 321
Rankine's Formula. 74
" Oil-testing Machine. 215
Reaction Steam-turbine. 689
" Turbine. 316
" Water-wheel. 319
Recording Gauges. 361
Records of Boiler-test. 501
Rectangular Weir. 272
Reducing Motion for Indicators. 529
" " " Locomotives. 637
" " Test of. 579
" Wheels. 532
" Wheel for Indicator. 524
Re-evaporation. 561
Refrigerating Machine of Air. 741
" " Ammonia. 742
" " Defined. 734
" " Efficiency. 736
" " Heat Exchanges. 735
" " Ideal Efficiency. 735
" " Negative Heat Losses. 738
" " Test. 748
" Plant, Illustrated. 746
Refrigeration, Absorption System. 747
" Data and Result Sheets. 749
Regenerator Hot-air Engine. 695
Relation of Pressure and Temperature of Gases. 712

PAGE
Report, Form of. . . . 3
" of Test, Steam-turbine. . . . 693
Residual. . . . 7
Resilience. . . . 68
" Torsional. . . . 83
Revolution-counter. . . . 572
Richards's Indicator. . . . 518
Rider Hot-air Engine. . . . 695
" " " Method of Operating. . . . 700
Riehlé Cement Machine. . . . 122
" Extensometer. . . . 128
" Hydraulic Machine. . . . 107
" Oil-testing Machine. . . . 224
" Power Machine. . . . 108
" Testing Machine. . . . 91
" Torsion Machine. . . . 118
Rigidity. . . . 68
" Modulus of Wire. . . . 83
Roller Planimeter. . . . 45
Rope Test-piece. . . . 140
Rotary Pumps. . . . 328
Rubber, Effects of Strain. . . . 86

S

Sample of Steam for Calorimeter. . . . 399
Sampling of Flue-gas. . . . 477
" " Fuel. . . . 452
Sand, Standard. . . . 187
Saturation Curve, Formula for. . . . 555
" " Heat Analysis from. . . . 609
" " Heat Interchanges from. . . . 611
Screws, Micrometer. . . . 50
Seaman's Pyrometer. . . . 385
Sellers's Injector. . . . 671
Separating Calorimeter. . . . 430
" " Forms. . . . 439
" " Formula. . . . 436
" " Table of Accuracy. . . . 431
" " Various forms. . . . 432
Setting of Cement. . . . 192
" " Valves of Steam Engine. . . . 586

PAGE
Shaft Diagram 567
Shafting, Table of H.P. 804
Shear, Parallel 77
Shearing Strain, Theory 81
" and Normal Stress 84
Sibley College Experimental Engine, Dimensions 657
Sieves for Cement 184
Signs and Tangents, Table of 777
Simple-lever Machines 90
Slide-rule, description 24
" Directions 25
" Fuller's 28
" Thatcher's 27
Slip of Pumps 330
Smoke Observations in Boiler-testing 505
Specifications Bridge Material 169
" for Cement 190
" of Eye-bars 171
" Iron Plate 172
" for Steel, Lloyd's 173
" Steel Plate 172
" Water-pipe 174
Specific Gravity of Cement required 191
" " " Metals, Table of 783
" " Table corresponding to Beaume's Scale 786
" " Test of Cement 183
Specific Heat, definition 338
" " of Brine 752
" " Chloride of Calcium 752
" " Determination 382
" " of Fuel-gases, Table 450
" " of Metals, Table of 783
" " and Melting-point, Tables of 383
Speed-counter 571
Speed-indicator 571
" Calibration 579
Speed Measurement with Chronograph 573
" " " Tachometer 572
Speed-recorder, Locomotive Tests 650
Square-inch Gauge-testing Apparatus 365
Squares and Diameter, Table of 576
Standard Form Test-pieces 136

PAGE
Standard Method of Testing Boilers. 495
" " " " Cement. 182
" " " Locomotive Testing. 634
" Test of Pumping-engines. 614
Steam-boiler Test Definitions. 493
Steam-boilers, Object of Test. 492
Steam Calorimeter for Locomotive Tests. 655
Steam Calorimeters, Classification. 391
Steam-chest Diagram. 567
Steam Accounted for by Indicator, References to Tables. 560
" Density and Specific Volume Formula. 342
" Dry and Saturated. 340
" Flow of, Through Orifice. 300
" Formula for Heat, Contents. 393
" " " Quality. 393
" Fuel- and Heat-consumption, of Engine Definitions. 569
" per I.H.P. from Indicator-diagram. 558
" Measurement of Heat, Contents. 394
" Methods of Determining Quality. 394
" Properties of. 340
" Quality of, Definition. 390
" Relations of Pressure and Temperature. 339
" Sample for Calorimeter. 391
" Superheated Properties. 340
" Table of Entropy. 301, 794
" Table of Properties. 788
" Weight Discharged Through Orifice. 302
Steam-engine Clearance, how measured. 583
" Compound, Test of. 631
" Efficiency Test. 589
" Indicator. 515
" " Care of. 545
" " Early Forms. 517
" " for Locomotives. 638
" " Parts. 520
" Inertia of Parts. 660
" Methods of Testing. 581
" Optical Indicator. 525
" References. 325
" Terms Defined. 560
" Test for Friction. 589
" Test, Hirn's Analysis. 590

PAGE
Steam-engine Valve-setting. 586
Steam-engines, Water-consumption Tables. 802
Steam Gauges. 357
Steam-gauge Calibration. 579
Steam-injector, Description. 670
" Directions for Handling and Applying. 679
" " " Testing. 679
" Form for Data and Results. 681
" Limit of Suction-head. 678
" Limits of Capacity. 676
" " of Temperature. 677
" Mechanical Theory. 674
" Theory of. 672
Steam Pumping-engines, Standard Test of. 614
Steam-separator, Use of. 615
Steam Tables. 340
" " Compared. 344
" " Use of. 392
Steam-turbine, Description of. 686
" Testing. 691
Steelyard Dynamometer. 250
Stillman's Viscosometer. 206
Stones, Frost Test. 176
" Tests of. 175
Straight Line Indicator. 525
" Lyne " 525
Strain, Definition of. 68
" Diagram Torsion Machine. 116
" Diagrams. 69, 144
" " Autographic. 145
" Relation to Temperature. 86
Strap-brakes. 240
Strength at High Temperature. 167
" of Materials, Notation. 72
" " " Table of Coefficients. 781
Strengths after Repeated Applications of Load. 167
Stress, Definition. 67
" Twisting with Bending. 85
" " " Longitudinal. 84
Stresses, Brake-strap. 236
" Combination of. 84
Strohmyer's Extensometer. 126

PAGE
Sulphur, Determination of, in Coal 470
Superheating Calorimeters 398
Surface Condenser 576
Suspended Planimeter 41
Sweet Measuring-machine 60
Swelling Test of Cement 192

T

Table, Air, Moisture Absorbed by 785
" Angles, Natural Functions of 777
" Analysis of Ash 787
" Anhydrous Ammonia, Properties of 740
" Beaumé Hydrometer Scale 786
" of Boiling-points 423
" " Chemical Equivalents 444
" " Coefficients of Friction 784
" " " " Strength 781
" " Composition of Fuels 451
" " " " Fuels of U. S 787
" " " " Gases 703
" " Depression, Mercury Column 350
" Dimensions of Wrought-iron Pipe 798
" Discharge of Steam by Napier's Formula 795
" Entropy of Steam 301
" Errors in Calorimeters 397
" External Moments 79
" Factors of Evaporation 797
" Heat of Combustion 446
" Horse-power of Belting 804
" " per Pound M.E.P 800
" " of Shafting 804
" Humidity of the Air 785
" Hyperbolic Logarithms 784
" Indicator Dimensions 528
" Logarithmic Functions of Angles 771
" Logarithms 759
" Materials, Important Properties of 783
" Maximum Temperature of Combustion 450
" " " of Feed-water for Injector 678
" Moisture Absorbed by Air 785
" Moments of Inertia 78

PAGE
Table of Numerical Constants. 756
" Pressure, Units of. 336
" Specific Heat of Gases 450
" Specific Heat and Melting-points. 383
" Specific Heat of Water. 338
" Steam-injector, Limits of 677
" Steam, Properties of. 788
" Strength of Metal at Different Temperatures. 782
" Suction-head, Limit of, in Injector. 678
" Thermometric Scales. 337
" Throttling-calorimeter, Limits of. 429
" Throttling-calorimeter, Application. 795
" Transverse Loads. 78
" U. S. Standard and Metric Weights. 754
" Water, Density and Weight of. 799
" Water Consumption for Steam-engines. 802
" Weir Discharge 803
Tabor Indicator. 520
" " External Spring. 524
Tachometer for Measuring Speed. 572
" " Water Measurements. 290
Tagliabue Viscosometer. 205
Temperature. 342
" Produced by Combustion. 448
" Effect on Strength. 167
" Maximum, Table of. 450
" Measured by Hot Body. 381
" Measurement of Steam. 400
" Relation to Heat. 337
" " " Strain. 86
" Rise in Adiabatic Compression. 729
Temperatures of Feed-water, How found. 615
Tension, Specimen Gauge. 147
Tensile Strength, Cement. 192
" " Formula. 72
Tension Test, Blank. 150
" " Directions. 145, 149
" " Forms. 152
" " Necking. 143
" " Piece. 137, 138
" " Report. 149
Test by Abrasion. 166

PAGE
Test, Admiralty, for Iron Plate. 172
" " Steel Plate 172
" of Asphalt 180
" by Bending 166
" of Bricks. 178
" " Bridge Materials. 168
" " Car Wheels. 167
" " Cement. 182
" " Compound Pumping-engine. 631
" " Condenser. 578
" " Density. 203
" by Drop Method 164
" of Efficiency. 3
" by Forging. 166
" of Belts. 263
" " Gas- or Oil-engines. 714
" " Gauges. 363
" by Hammer. 166
" " Hardening. 166
" of Hot-air Engine. 697
" by Impact, Directions. 163
" of Injector. 679
" " Lubricants. 201
" " Materials. 67
" " Paving Materials. 171
" " Power-pumps. 339
" " Pulsometer 684
" " Refrigerating-machine. 748
" by Repeated Loading. 166
" of Specific Gravity of Cement. 183
" " Steam-turbines. 691
" " Stones 175
" " Torsion, Long Specimens. 1185
" " Viscosity. 204
" " Water-pipe. 174
Test-pieces, Cast-iron. 139
" Cement. 140
" Chain. 139
" Compression. 142
" Form of. 136
" Rope. 140
" Tension. 138

PAGE
Test-pieces, Torsion 142
" Transverse..... 142
" of Wire-rope..... 140
" " Wood..... 138
Testing of Water-motors..... 322
" by Welding..... 165
Testing-machine, Calibration 97
" Cement..... 119
" Classification..... 90
" Compound Lever..... 91
" Differential Lever..... 91
" Emery..... 102
" Extensometer..... 124
" Frame..... 97
" Fulcrum..... 95
" Hydraulic..... 92
" " and Lever..... 93
" Impact and Drop..... 119
" Olsen..... 110
" Power System..... 89, 98
" Requirements of..... 88
" Riehlé, Hydraulic..... 107
" " Power..... 108
" Shackle's..... 89, 98
" Simple-lever..... 90
" Torsion, Thurston..... 114
" Varieties and Forms..... 88
" Watertown Arsenal..... 100
" Wedges..... 100
" Weighing Devices..... 88
" Weighing System..... 96
Thatcher's Slide-rule..... 27
Theory, Hot-air Engine..... 697
Thermodynamic Efficiency..... 570
Thermometers, Air..... 371
Thermometer, Alcohol..... 371
" Calibration..... 380, 580
" Cups..... 400
" Mercurial..... 369
" Rules for Handling..... 370
Thermometric Scales, Table of..... 337
Thompson's Fuel Calorimeter..... 455

PAGE

Thompson Indicator. 519
Three-way Cock. 544
Throttling-calorimeter. 398, 418
" Diagram. 425
" " for use. 796
" Forms. 430
" Limit of. 427
" Table for use. 795
Thurston Extensometer. 129
Thurston's Oil-testing Machine, Directions. 222
" " " Standard. 217
" " " Theory. 220
" R.R. Oil-testing Machine. 219
" Torsion-machine. 114
" " Diagram. 115
" " Directions. 161
Torsion-machine Thurston. 114
" Olsen. 118*a*
" Riehlé. 117, 118
Torsion Strain, Theory. 82
Torsion-test, Directions. 160
" Forms for Report. 162
Torsion Testing-machine. 114
Torsion-tests, Long Specimens. 118*b*
Torsion Test-pieces. 142
Torsional Resilience. 83
Traction Dynamometer. 246
Transmission Dynamometer. 247
Transverse Deflectometer. 135
" Formula. 76
" Loads, Table. 78
" Test, Directions. 156
" " Elastic Curve. 159
" " Forms. 157
" " Specimens. 142
Trapezoidal Weir. 272
Triangular Weir. 272
Triple-engine, Hirn's Analysis. 604
Triple-expansion, Diagrams. 565
Tuning-fork Chronograph. 574
Turbine, Steam-, Description of. 686
" Water-wheel. 315

PAGE
Turbine, Water-wheel, Forms of Test. 318
" " Theory. 316
Twisting and Bending Stress. 85
" " Longitudinal Stress. 84
Two-cycle Gas-engine. 707

U

Undershot Water-wheels. 313
Unwin's Extensometer. 126
U-shaped Manometer. 345

V

Vacuum Gauge. 360
" " Calibration. 367
Vacuum Line. 548
Valve-setting. 586
Valves, Loss of Head. 279
Van Winkle Power-meter. 261
Variation of Load, Diagram. 564
Velocity of Approach. 283
" " Discharge, Coefficient for. 271
" " Flow of Air. 297
" Head. 271
" of Nozzle Discharge, DeLaval Turbine. 688
Venturi Tube Calibration. 287
" " Flow Through. 275
Vernier. 29
" Caliper. 57
Vicat Needle. 186
Viscosity of Materials. 70
" " Metals. 167
" " Oil. 203
" Test, Directions. 208
Viscosbmeter, Carpenter's. 207
" Gibbs's. 205
" Pendulum. 209
" Pennsylvania R.R. 204
" Perkins. 205
" Stillman. 206
" Tagliabue. 205

PAGE
Volume of Air Discharged. 296
" " " Measured by Heat absorbed 727

W

Water, Computation Table for Steam-engine. 802
" Energy of Falling. 309
" Equivalent of Calorimeter. 401
" Flow in Circular Pipes. 277
" " through Nozzles. 275
" " under Pressure. 276
" " in Streams, Measurement of. 289
" " through Venturi Tubes. 275
" " over Weirs. 272, 281
" Measurement of Flow 281
" " " " in Pipes. 288
" " " " with Pitot's Tube. 292
" Measurement of Head. 281
" Measurement with Hydrometric Pendulum. 295
" Measurements, Locomotive Tests. 645
" Meters. 283
" Meter Calibration. 579
" " Errors. 284
" " Locomotive Test. 64, 645
" Motors, Measurement of Head. 323
" " Testing of. 322
" Table of, Density and Weight. 799
" Theory of Flow. 270
Water-pipe Specifications. 174
Water-pressure Engines. 309
" " Test of. 325
Water-power System, Parts of. 309
Water Ram. 321
Water-vapor for Refrigeration. 739
Water-wheels, Breast. 313
" Classified. 310
" Impulse. 314
" Overshot. 311
" Poncelet. 314
" Reaction Type. 319
Water-wheels, Test of. 325
" Turbines. 315
" Undershot. 313

PAGE
Watertown Testing-machine. 100
Watt Steam-engine Indicator. 517
Wearing-test Paving-brick. 180
Weathering Quality of Stone. 178
Webber Dynamometer. 255
Wedge Extensometer. 124
Wedgewood's Pyrometer. 381
Weighing Device, Testing-machines. 88
" Scales Calibration. 579
" System Testing-machine. 96
Weight of Steam from Indicator Diagram. 557
Weir Calibration 285
Weirs, Coefficients for. 274
" Different Forms. 272
" Discharge over, Table of. 803
" Formula for. 273
" Measurement of Water, Errors in 282
" Measurement of Head 281
" Requirements for Accuracy. 282
Welding Test. 165
Welter's Method of Measuring Heating Value. 446
Werder Testing-machine. 93
Westinghouse Gas-engine. 706
Williams's Inertia Indicator. 661
Willis's Planimeter. 45
Wilson's Flue-gas Apparatus. 481
Wind Resistance, Locomotive Tests. 651
Wipe Spark-ignition. 704
Wire-drawing. 550
Wire-rope Test-piece. 140
Wooden Tension Test-pieces. 138
Work-diagram 21
Work Lost due to Heating in Compression. 729
" Mechanical, Isothermal Expansion. 712

Y

Yield Point. 69

Z

Zero Absolute 338
" Circle, Theory. 38
Zeuner's Valve-diagram 587